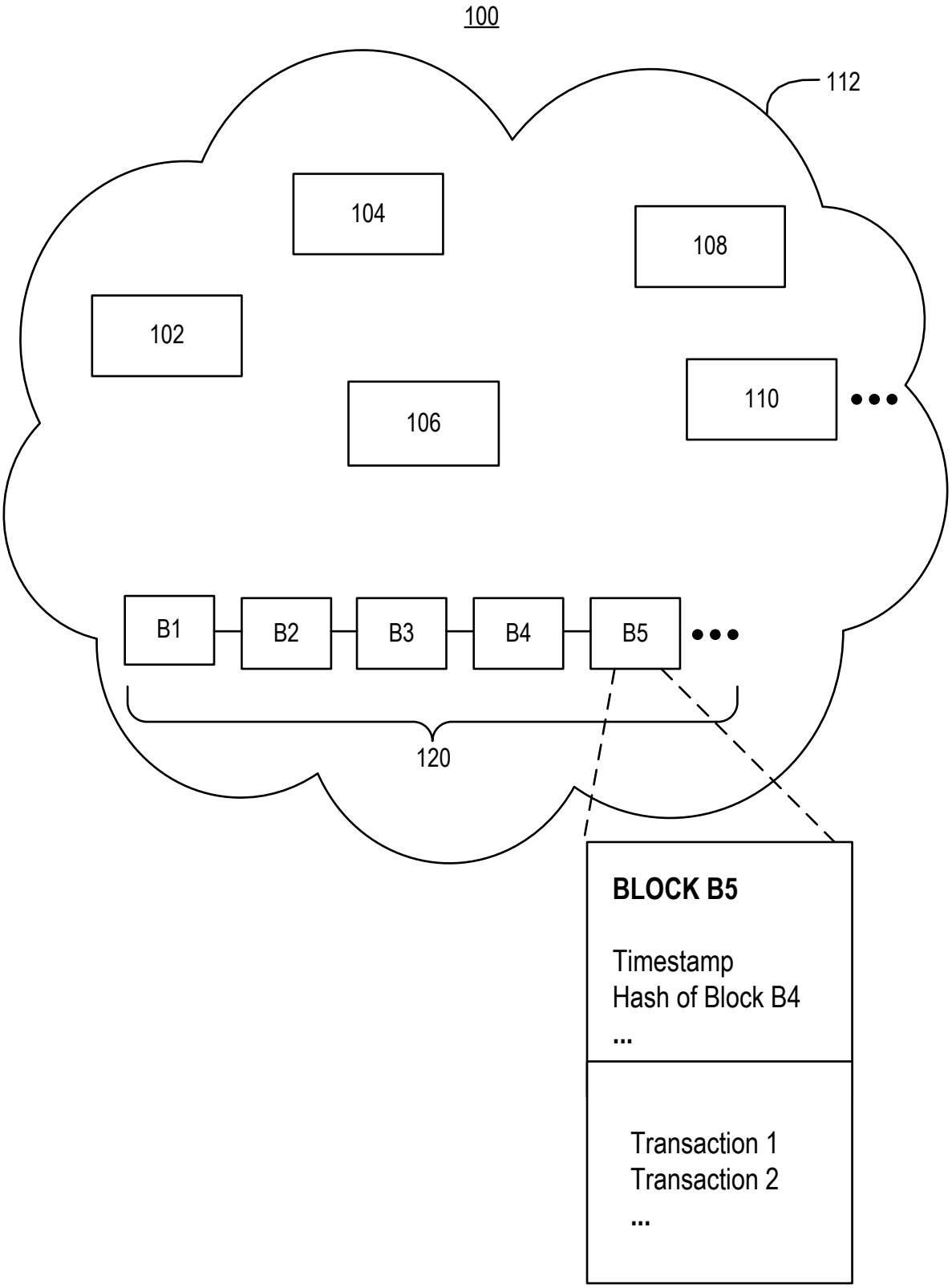
100
112
104
108
102
110
106
B1
B2
B3
B4
B5
120
BLOCK B5
Timestamp
Hash of Block B4
...
Transaction 1
Transaction 2
...

FIG. 1

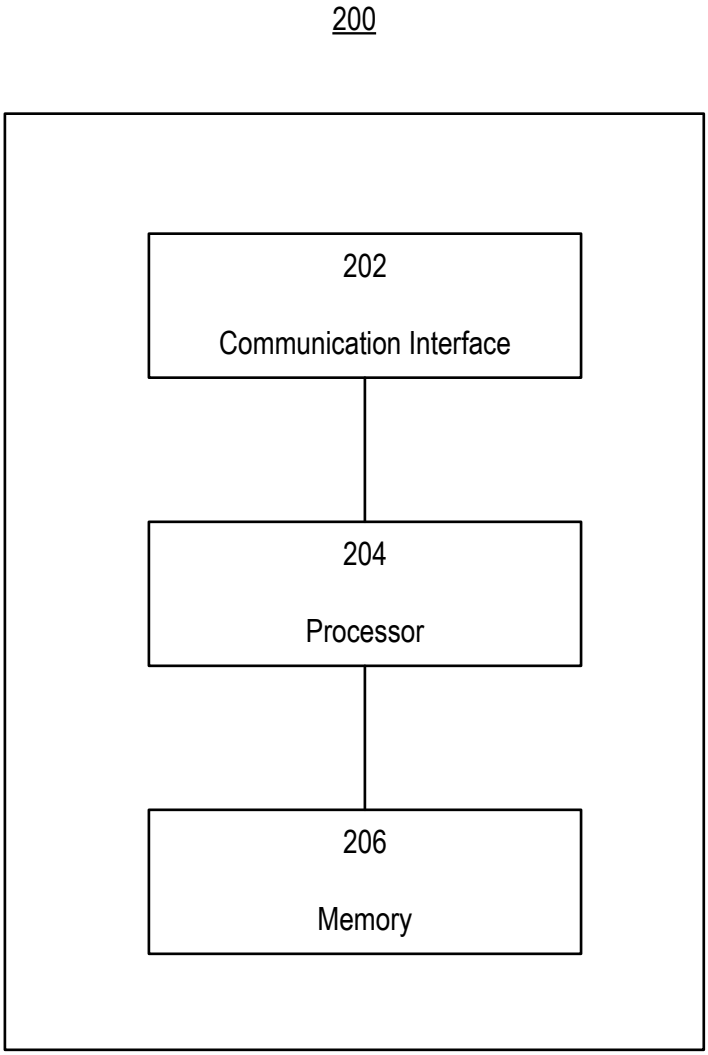

FIG. 2

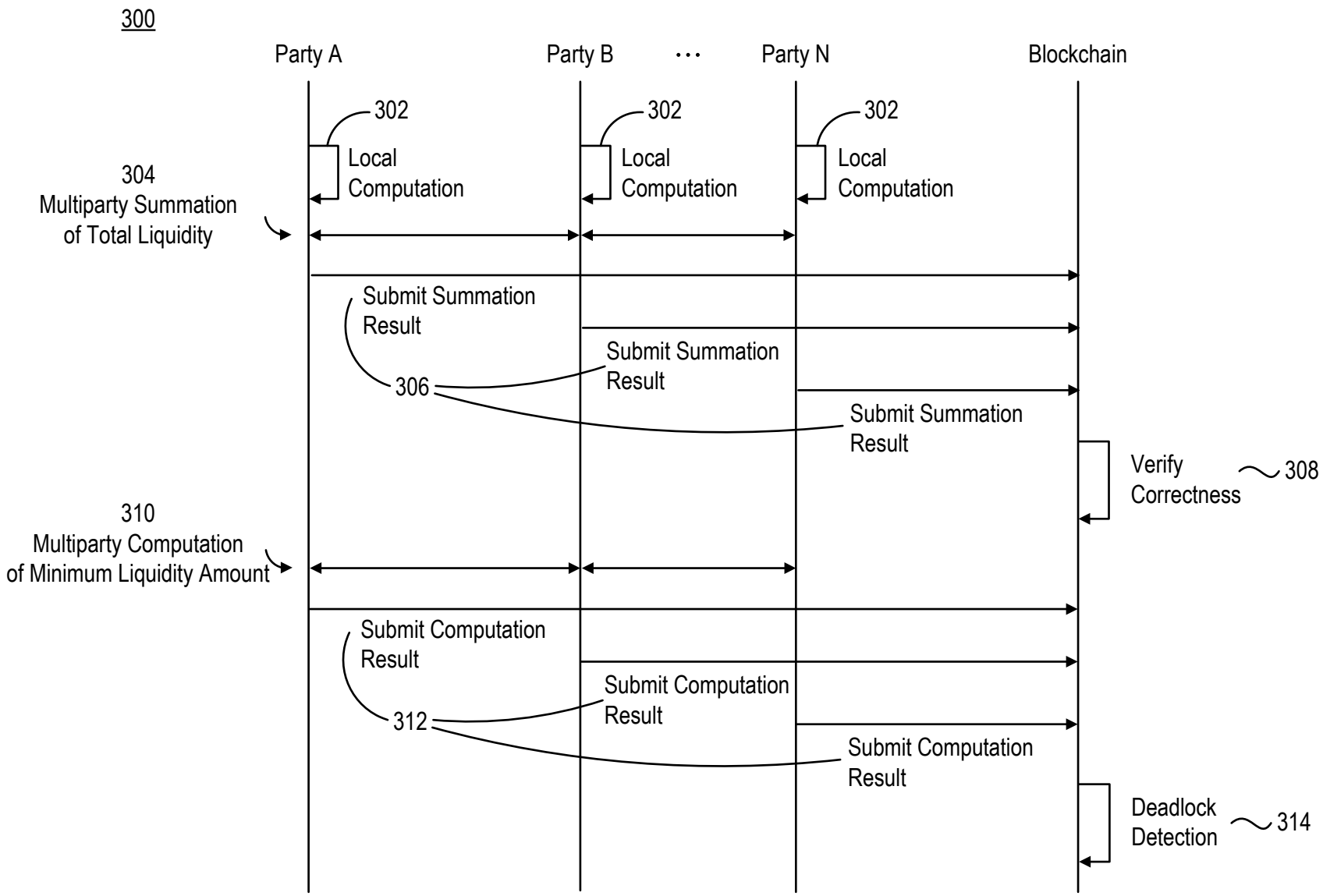
300
Party A
Party B
Party N
Blockchain
302
Local Computation
302
Local Computation
302
Local Computation
304
Multiparty Summation of Total Liquidity
Submit Summation Result
306
Submit Summation Result
Submit Summation Result
Verify Correctness
308
310
Multiparty Computation of Minimum Liquidity Amount
Submit Computation Result
312
Submit Computation Result
Submit Computation Result
Deadlock Detection
314

FIG. 3

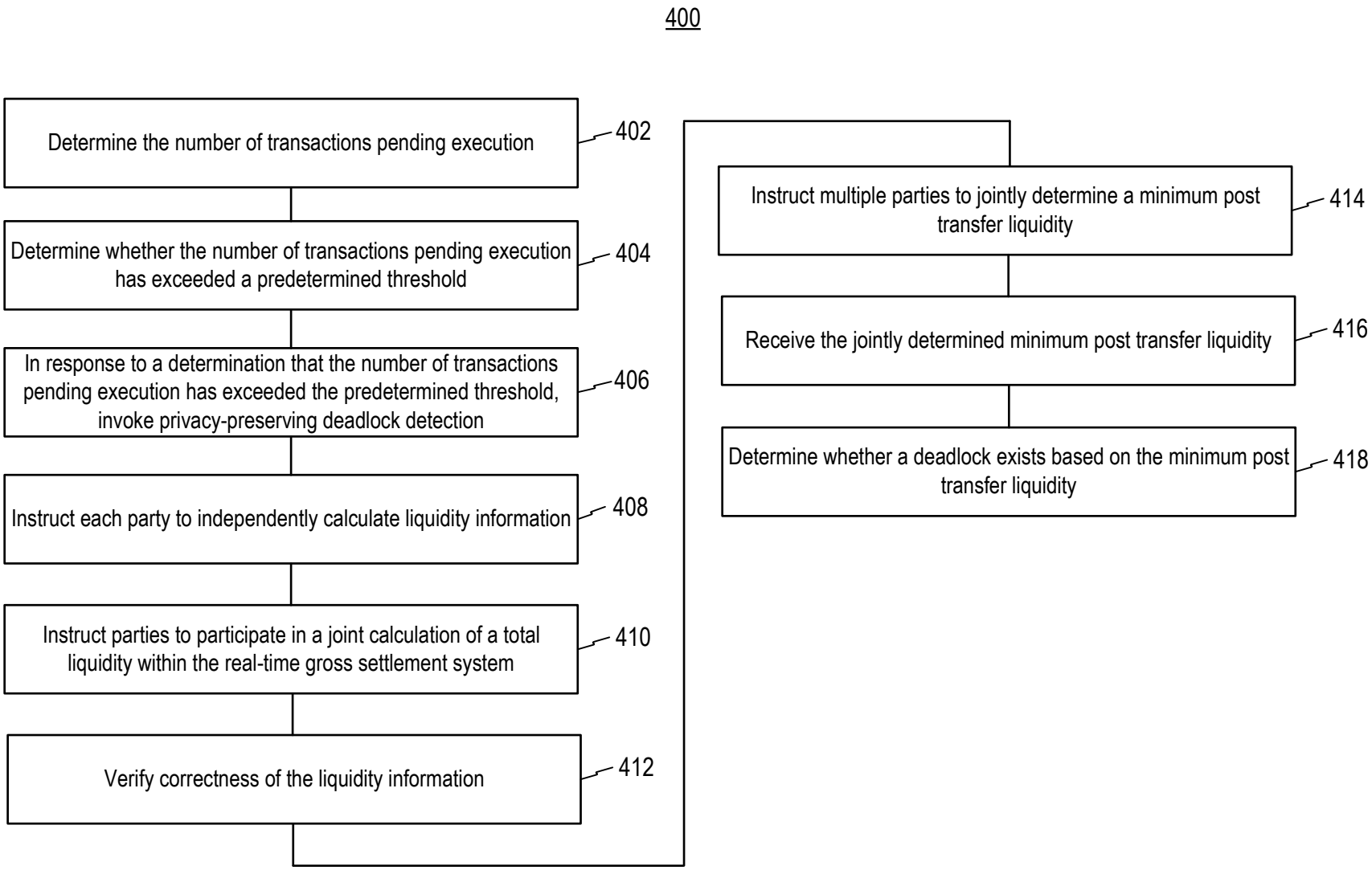
400
Determine the number of transactions pending execution
402
Determine whether the number of transactions pending execution has exceeded a predetermined threshold
404
In response to a determination that the number of transactions pending execution has exceeded the predetermined threshold, invoke privacy-preserving deadlock detection
406
Instruct each party to independently calculate liquidity information
408
Instruct parties to participate in a joint calculation of a total liquidity within the real-time gross settlement system
410
Verify correctness of the liquidity information
412
Instruct multiple parties to jointly determine a minimum post transfer liquidity
414
Receive the jointly determined minimum post transfer liquidity
416
Determine whether a deadlock exists based on the minimum post transfer liquidity
418

FIG. 4

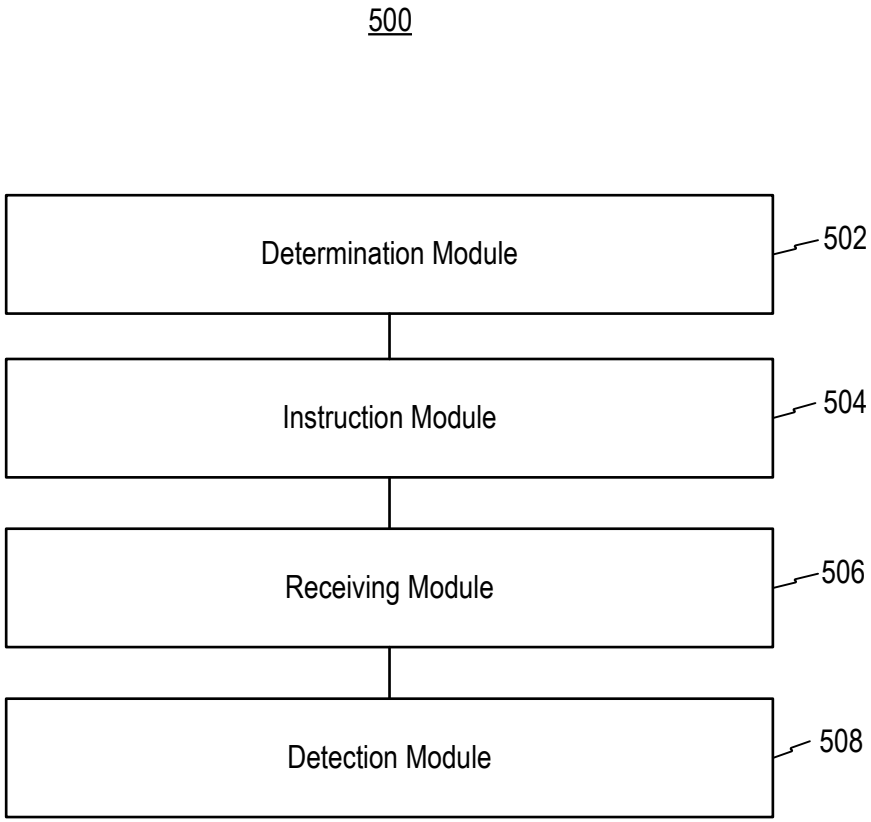
500
Determination Module
502
Instruction Module
504
Receiving Module
506
Detection Module
508

FIG. 5