(12) INTERNATIONAL APPLICATION PUBLISHED UNDER THE PATENT COOPERATION TREATY (PCT)

(19) World Intellectual Property Organization
International Bureau

(43) International Publication Date
25 November 2010 (25.11.2010)

PCT

(10) International Publication Number
WO 2010/133342 A1

(51) International Patent Classification:
A24F 47/00 (2006.01)

(21) International Application Number:
PCT/EP2010/003037

(22) International Filing Date:
18 May 2010 (18.05.2010)

(25) Filing Language: English

(26) Publication Language: English

(30) Priority Data:
09251364.7 21 May 2009 (21.05.2009) EP

(71) Applicant *(for all designated States except US)*: **PHILIP MORRIS PRODUCTS S.A.** [CH/CH]; Quai Jeanrenaud 3, CH-2000 Neuchâtel (CH).

(72) Inventors: **FERNANDO, Felix**; 24 Tudor Close, Wokingham, Berkshire RG40 2LU (GB). **CHEMLA, Marc-Robert**; Chemin de Plan 51, CH-1170 Aubonne (CH). **STAHLE, Fredrik**; Porsv 3, S-236 42 Hollviken (SE).

(74) Agent: **BRADFORD, Victoria, Sophie**; Reddie & Grose, 16 Theobalds Road, London WC1X 8PL (GB).

(81) Designated States *(unless otherwise indicated, for every kind of national protection available)*: AE, AG, AL, AM, AO, AT, AU, AZ, BA, BB, BG, BH, BR, BW, BY, BZ, CA, CH, CL, CN, CO, CR, CU, CZ, DE, DK, DM, DO, DZ, EC, EE, EG, ES, FI, GB, GD, GE, GH, GM, GT, HN, HR, HU, ID, IL, IN, IS, JP, KE, KG, KM, KN, KP, KR, KZ, LA, LC, LK, LR, LS, LT, LU, LY, MA, MD, ME, MG, MK, MN, MW, MX, MY, MZ, NA, NG, NI, NO, NZ, OM, PE, PG, PH, PL, PT, RO, RS, RU, SC, SD, SE, SG, SK, SL, SM, ST, SV, SY, TH, TJ, TM, TN, TR, TT, TZ, UA, UG, US, UZ, VC, VN, ZA, ZM, ZW.

(84) Designated States *(unless otherwise indicated, for every kind of regional protection available)*: ARIPO (BW, GH, GM, KE, LR, LS, MW, MZ, NA, SD, SL, SZ, TZ, UG, ZM, ZW), Eurasian (AM, AZ, BY, KG, KZ, MD, RU, TJ, TM), European (AL, AT, BE, BG, CH, CY, CZ, DE, DK, EE, ES, FI, FR, GB, GR, HR, HU, IE, IS, IT, LT, LU, LV, MC, MK, MT, NL, NO, PL, PT, RO, SE, SI, SK,

[Continued on next page]

(54) Title: AN ELECTRICALLY HEATED SMOKING SYSTEM

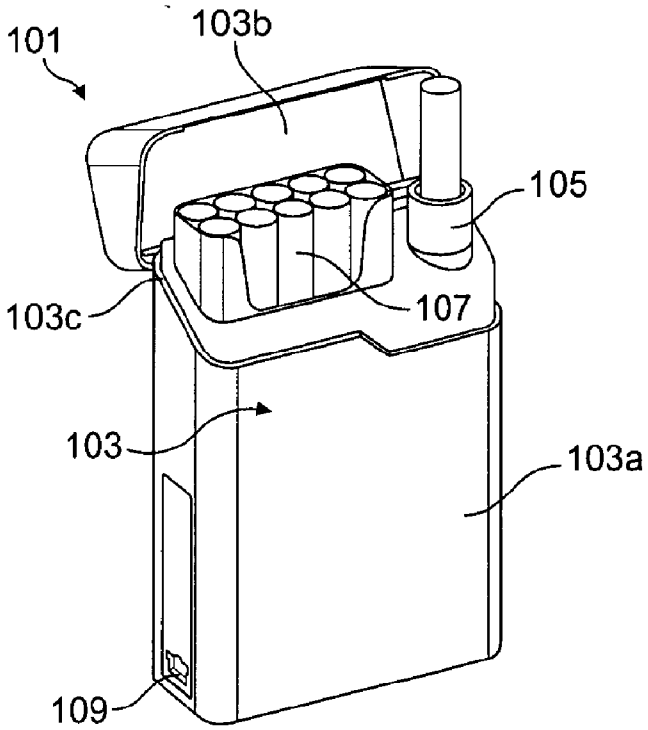

FIG. 1a

(57) Abstract: There is provided an electrically heated smoking system comprising a secondary unit capable of receiving a smoking article having an aerosol-forming substrate. The secondary unit comprises at least one heating element and an interface for connection to a primary power supply for supplying electrical power to the at least one heating element during a pre-heating mode, to increase the temperature of the aerosol-forming substrate to an operating temperature. The secondary unit further comprises a secondary power supply arranged to supply electrical power to the at least one heating element during a smoking mode, to maintain the temperature of the aerosol-forming substrate at substantially the operating temperature. The secondary unit further comprises secondary circuitry. The electrically heated smoking system may optionally include a primary unit comprising the primary power supply and primary circuitry. By dividing the power supply between the primary unit and the secondary unit, the secondary unit can be made smaller and more convenient for the user.

WO 2010/133342 A1

SM, TR), OAPI (BF, BJ, CF, CG, CI, CM, GA, GN, GQ, GW, ML, MR, NE, SN, TD, TG).

Published:

— *with international search report (Art. 21(3))*

— *before the expiration of the time limit for amending the claims and to be republished in the event of receipt of amendments (Rule 48.2(h))*