(12) INTERNATIONAL APPLICATION PUBLISHED UNDER THE PATENT COOPERATION TREATY (PCT)

(19) World Intellectual Property Organization
International Bureau

(43) International Publication Date
28 June 2012 (28.06.2012)

WIPO | PCT

(10) International Publication Number
WO 2012/087836 A2

(51) International Patent Classification: *A61M 5/31* (2006.01)

(21) International Application Number: PCT/US2011/065574

(22) International Filing Date: 16 December 2011 (16.12.2011)

(25) Filing Language: English

(26) Publication Language: English

(30) Priority Data:
61/424,883 20 December 2010 (20.12.2010) US

(71) Applicant *(for all designated States except US)*: **NOVARTIS AG** [CH/CH]; Lichtstrasse 35, CH-4056 Basel (CH).

(72) Inventors; and
(75) Inventors/Applicants *(for US only)*: **BROWN, Kyle** [US/US]; 5909 River Bend Drive, Fort Worth, Texas 76132 (US). **YAN, Dengzhu** [US/US]; 59 School Street, Apartment 21B, Northborough, Massachusetts 01532 (US). **DOWNER, David** [US/US]; 5217 Spanish River Trail, Fort Worth, Texas 76137 (US).

(74) Agents: **PREJEAN, Jonathan E.** et al.; 6201 South Freeway, Fort Worth, Texas 76134 (US).

(81) Designated States *(unless otherwise indicated, for every kind of national protection available)*: AE, AG, AL, AM, AO, AT, AU, AZ, BA, BB, BG, BH, BR, BW, BY, BZ, CA, CH, CL, CN, CO, CR, CU, CZ, DE, DK, DM, DO, DZ, EC, EE, EG, ES, FI, GB, GD, GE, GH, GM, GT, HN, HR, HU, ID, IL, IN, IS, JP, KE, KG, KM, KN, KP, KR, KZ, LA, LC, LK, LR, LS, LT, LU, LY, MA, MD, ME, MG, MK, MN, MW, MX, MY, MZ, NA, NG, NI, NO, NZ, OM, PE, PG, PH, PL, PT, QA, RO, RS, RU, RW, SC, SD, SE, SG, SK, SL, SM, ST, SV, SY, TH, TJ, TM, TN, TR, TT, TZ, UA, UG, US, UZ, VC, VN, ZA, ZM, ZW.

(84) Designated States *(unless otherwise indicated, for every kind of regional protection available)*: ARIPO (BW, GH, GM, KE, LR, LS, MW, MZ, NA, RW, SD, SL, SZ, TZ, UG, ZM, ZW), Eurasian (AM, AZ, BY, KG, KZ, MD, RU, TJ, TM), European (AL, AT, BE, BG, CH, CY, CZ, DE, DK, EE, ES, FI, FR, GB, GR, HR, HU, IE, IS, IT, LT, LU, LV, MC, MK, MT, NL, NO, PL, PT, RO, RS, SE, SI, SK, SM, TR), OAPI (BF, BJ, CF, CG, CI, CM, GA, GN, GQ, GW, ML, MR, NE, SN, TD, TG).

**Published**:
— *without international search report and to be republished upon receipt of that report (Rule 48.2(g))*

(54) Title: INTRAOCULAR LENS TRANSFER CASE

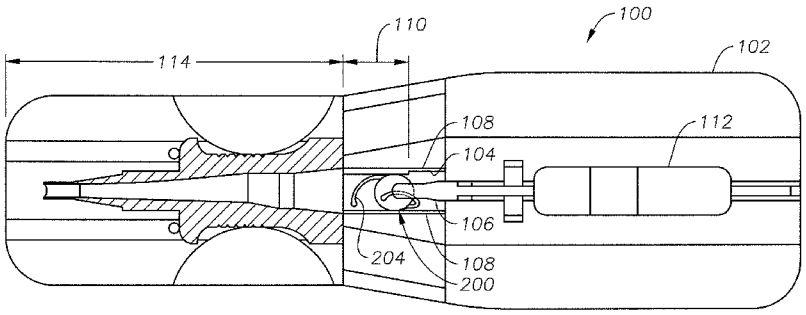


Fig. 1A

(57) Abstract: An intraocular lens (IOL) transfer case for transferring an IOL to an injection cartridge includes a lens holder for holding the IOL. The lens holder includes a bore. Folding members within the lens holder are configured to fold the IOL into a partially folded position when the IOL is slid through the bore across the folding members. The IOL transfer case also includes an interface configured to removably connect to an injection cartridge. The interface is positioned to deliver the IOL in the partially folded position within the injection cartridge when the interface is connected to the injection cartridge. The IOL transfer case also includes a plunger connected to the lens holder and configured to push the IOL in the partially folded position through the bore to deliver the IOL into the injection cartridge.

WO 2012/087836 A2