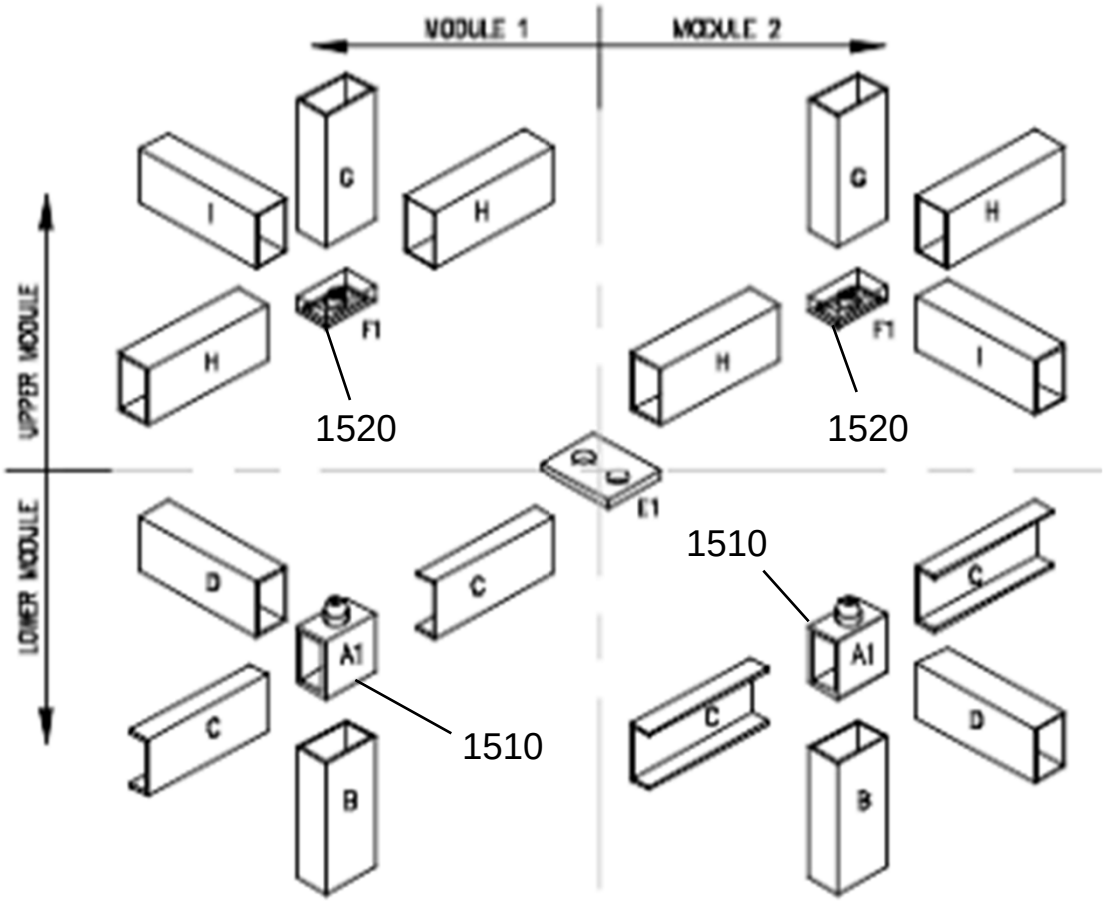

EXPLODED VIEW OF TYPE 1 COLUMN SPLICE JOINT

MODULE COMPONENTS:
A1 – CONNECTION BOX WITH SHEAR KEY
B – COLUMN OF LOWER MODULE
C – LONG-SPAN CEILING BEAM
D – SHORT-SPAN CEILING BEAM
E1 – CONNECTING PLATE FOR TYPE 1 SPLICE JOINT
F1 – SHEAR KEY CAPPING PLATE FOR TYPE 1 SPLICE JOINT
G – COLUMN OF UPPER MODULE
H – LONG-SPAN FLOOR BEAM
I – SHORT-SPAN FLOOR BEAM

FIG. 15(b)

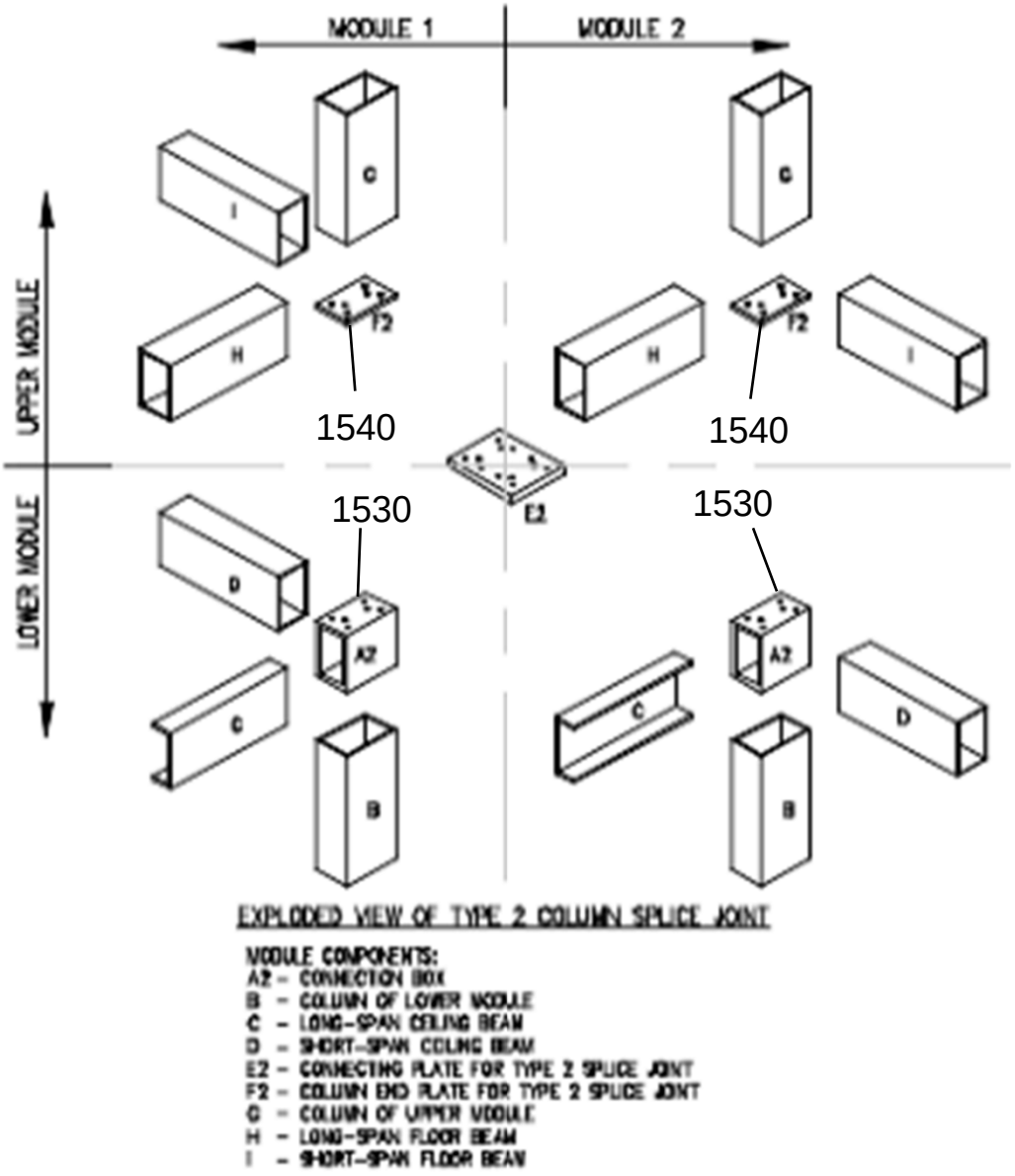

EXPLODED VIEW OF TYPE 2 COLUMN SPLICE JOINT

MODULE COMPONENTS:
A2 – CONNECTION BOX
B – COLUMN OF LOWER MODULE
C – LONG-SPAN CEILING BEAM
D – SHORT-SPAN CEILING BEAM
E2 – CONNECTING PLATE FOR TYPE 2 SPLICE JOINT
F2 – COLUMN END PLATE FOR TYPE 2 SPLICE JOINT
G – COLUMN OF UPPER MODULE
H – LONG-SPAN FLOOR BEAM
I – SHORT-SPAN FLOOR BEAM

FIG. 15(c)