FIG. 1

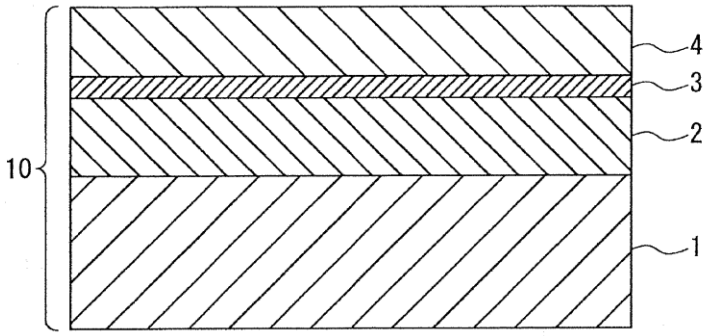

FIG. 2

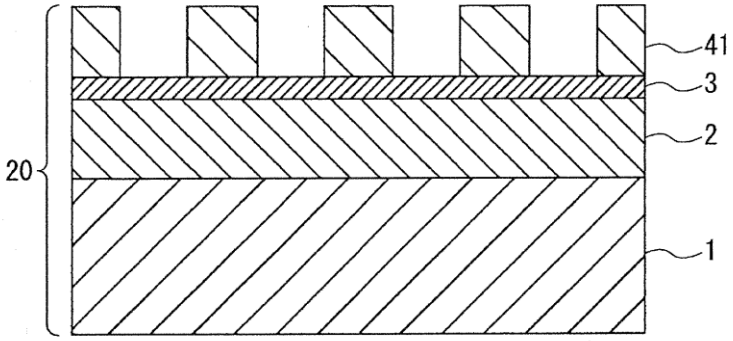

FIG. 3

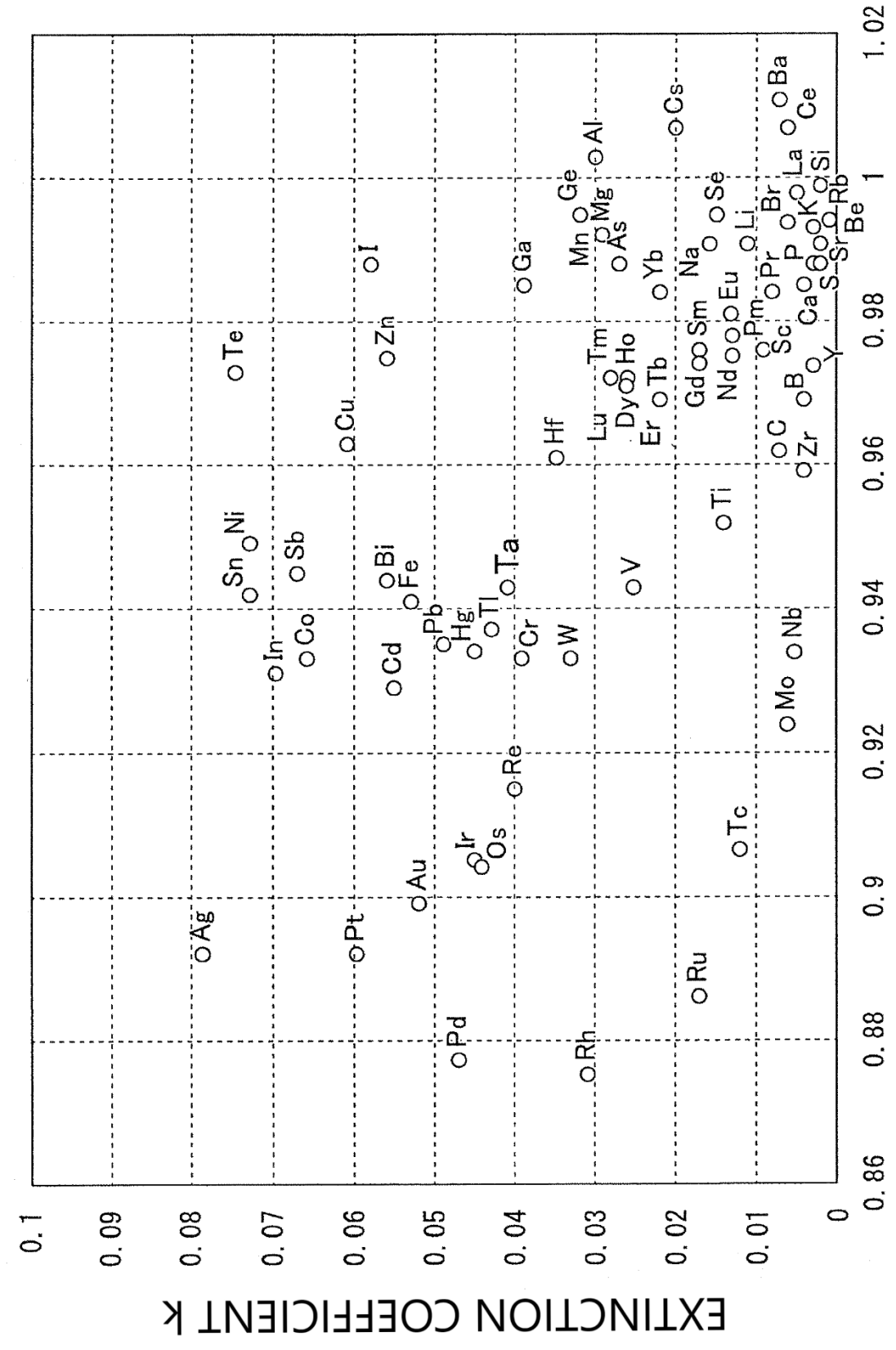
EXTINCTION COEFFICIENT k
REFRACTIVE INDEX n
0.1
0.09
0.08
0.07
0.06
0.05
0.04
0.03
0.02
0.01
0
0.86
0.88
0.9
0.92
0.94
0.96
0.98
1
1.02
Ag
Pt
Au
Ir
Os
Re
Pd
Rh
Ru
Tc
Mo
Nb
Cd
In
Co
Pb
Hg
Tl
Cr
W
Ta
Sn
Ni
Sb
Bi
Fe
Cu
Te
Zn
I
Ga
Hf
V
Ti
Lu
Tm
Dy
Ho
Er
Tb
Gd
Sm
Nd
Eu
Pm
Sc
Y
C
Zr
B
Ca
S
Sr
P
Pr
Na
Li
Se
Br
K
Rb
Be
La
Si
Ce
Ba
Cs
Yb
Mn
Ge
Mg
As
Al

FIG. 4

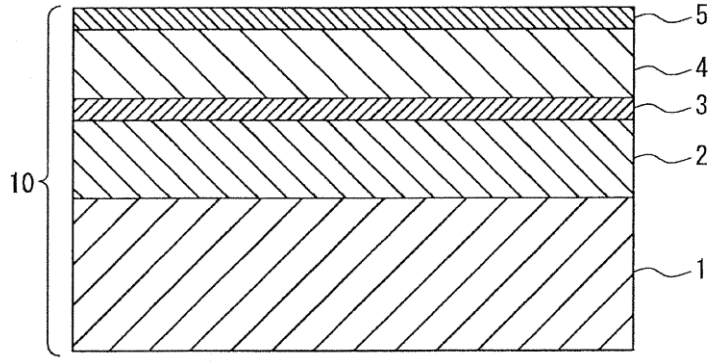

FIG. 5

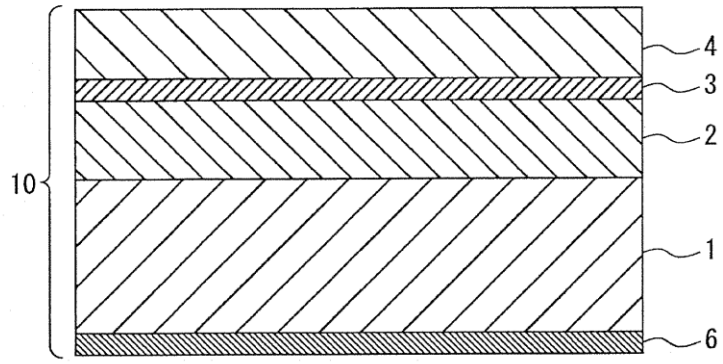

FIG. 6

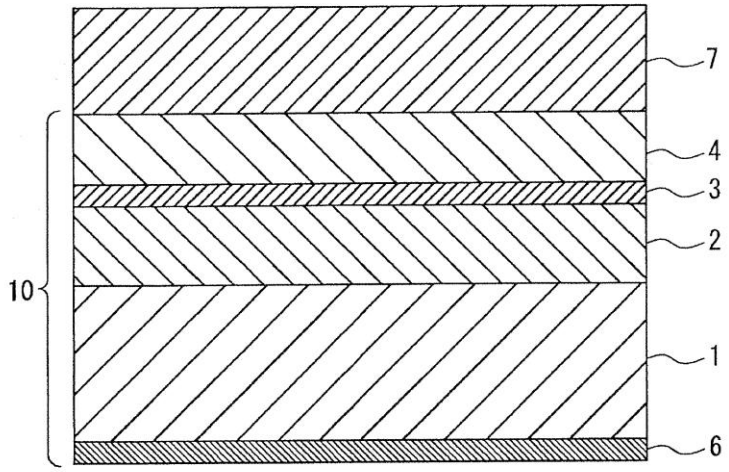

FIG. 7

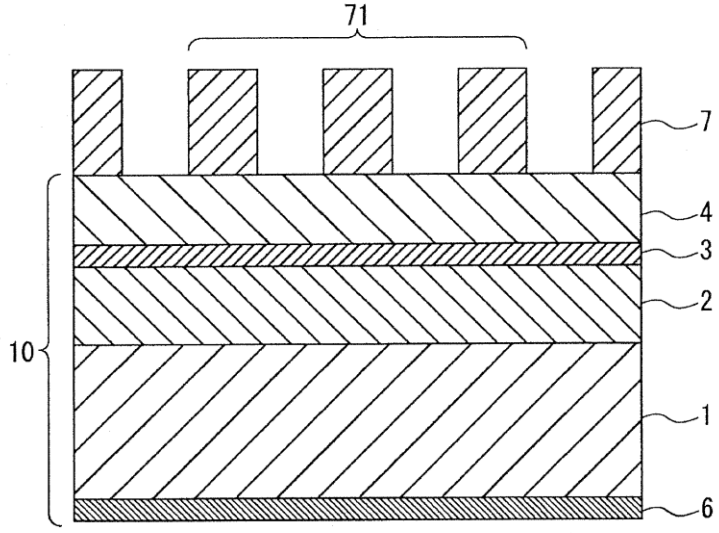

FIG. 8

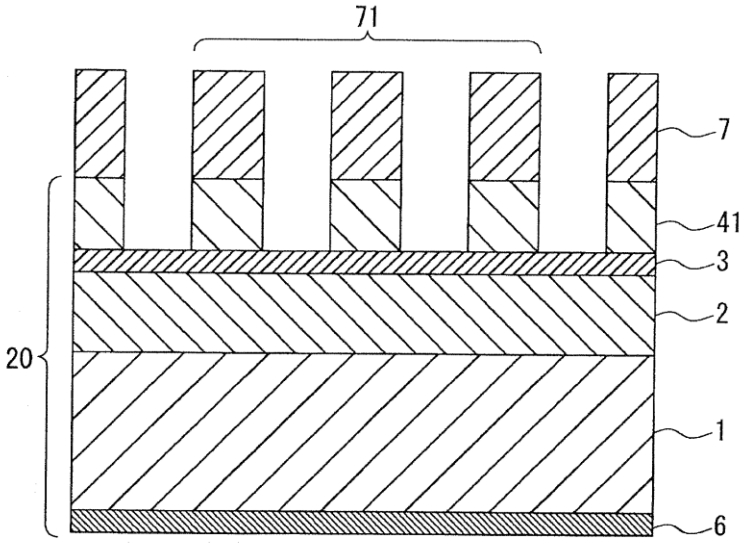

FIG. 9

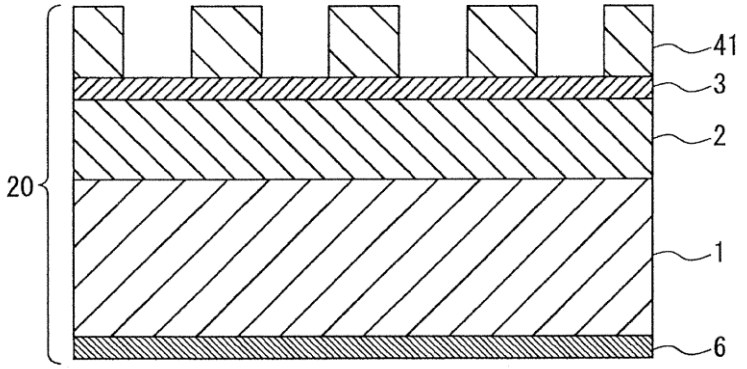

FIG. 10

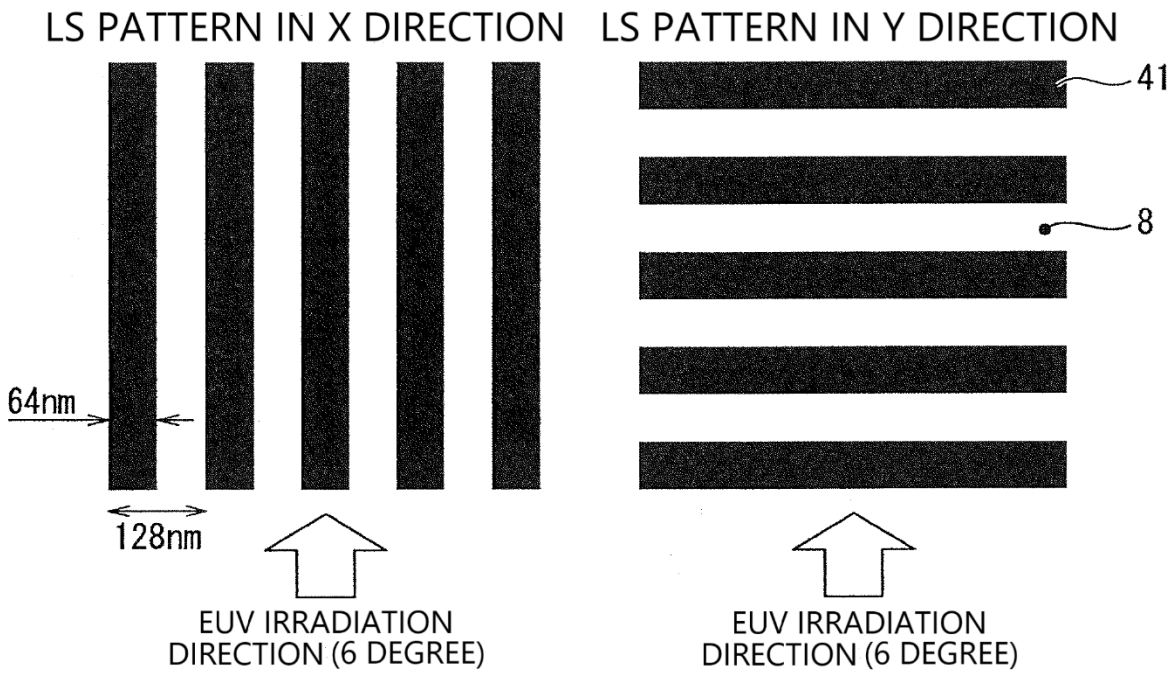
LS PATTERN IN X DIRECTION
LS PATTERN IN Y DIRECTION
41
8
64nm
128nm
EUV IRRADIATION DIRECTION (6 DEGREE)
EUV IRRADIATION DIRECTION (6 DEGREE)