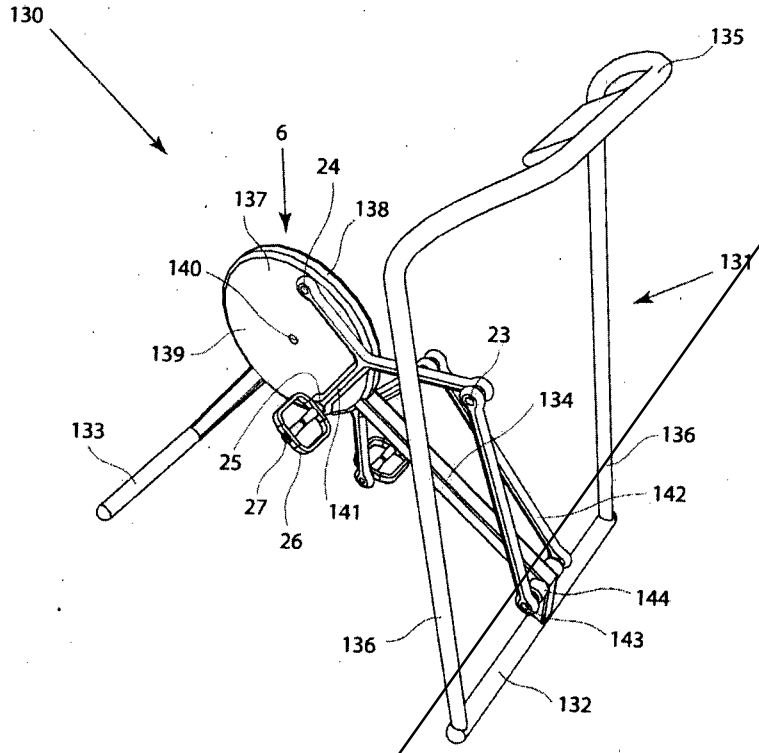

Figure 14

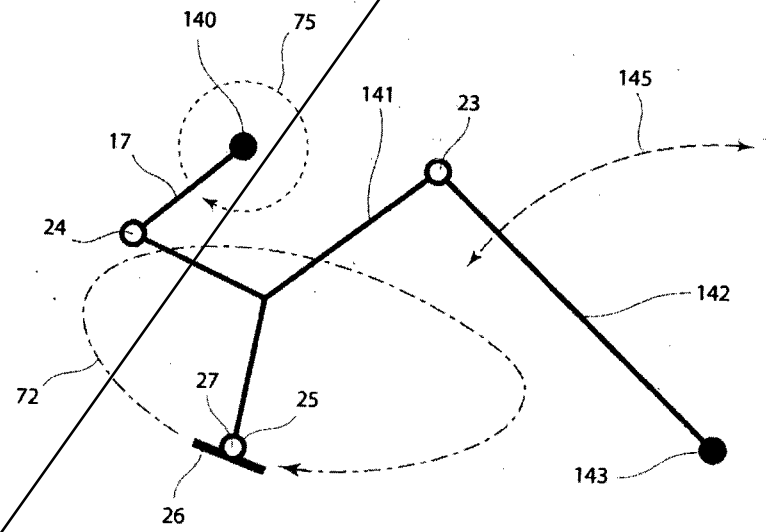

Figure 15

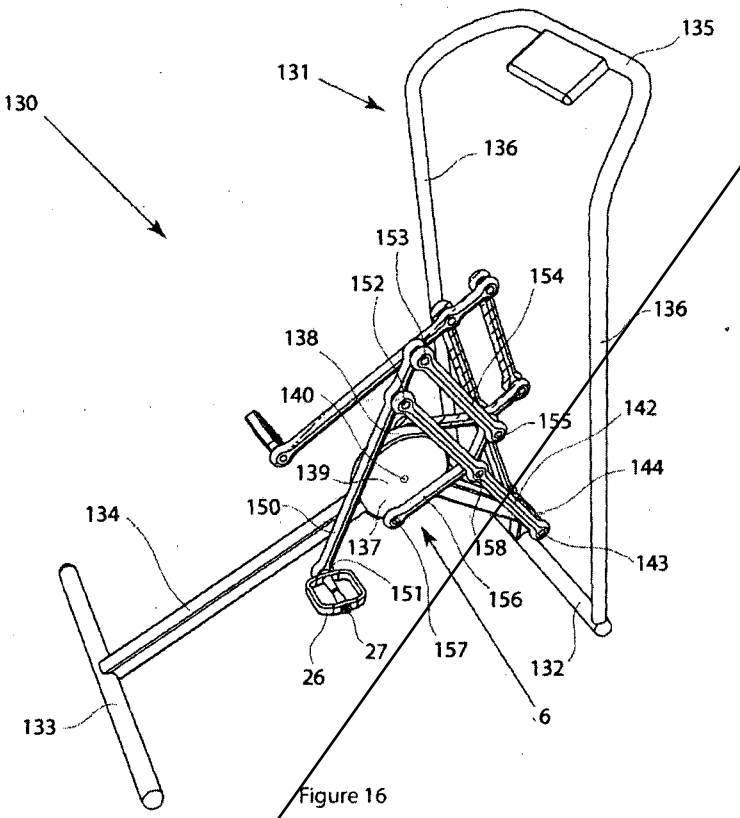

Figure 16

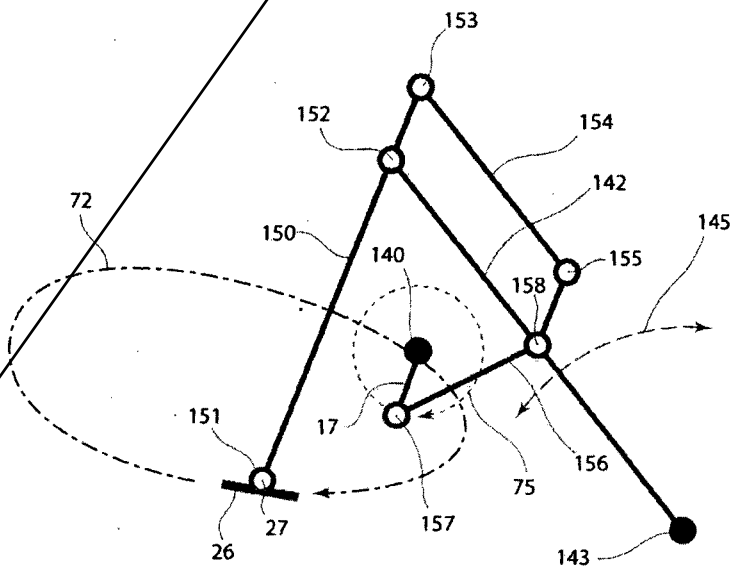

Figure 17

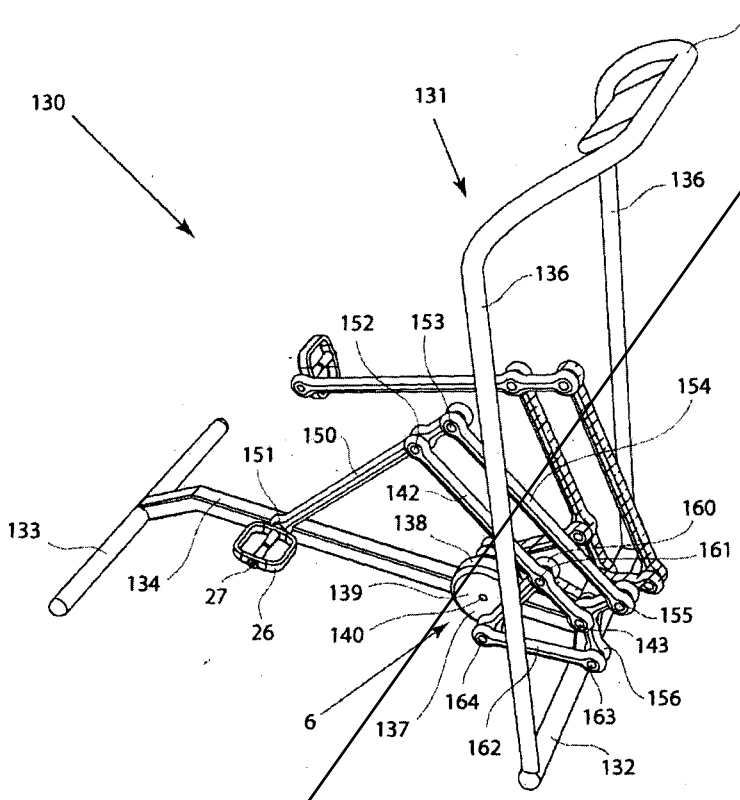

Figure 18

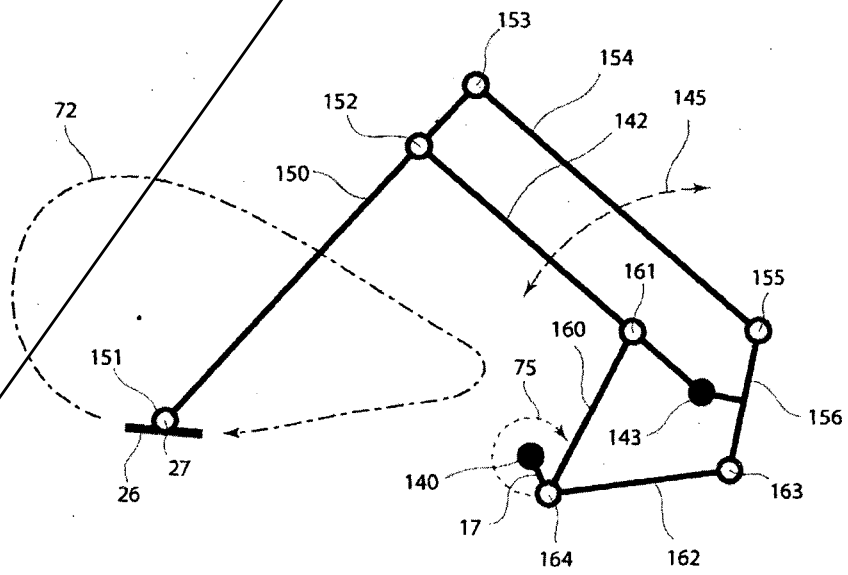

Figure 19

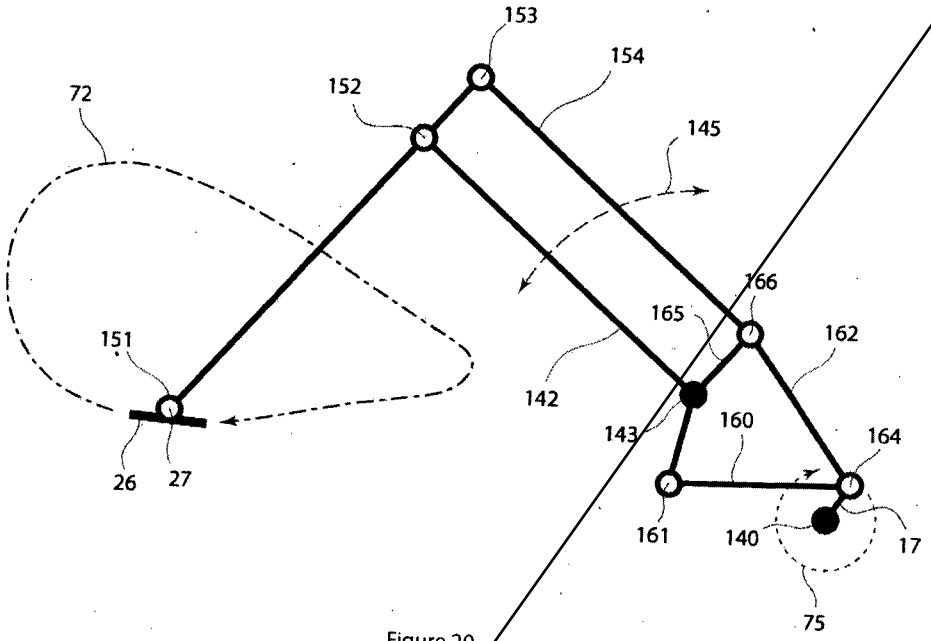

Figure 20

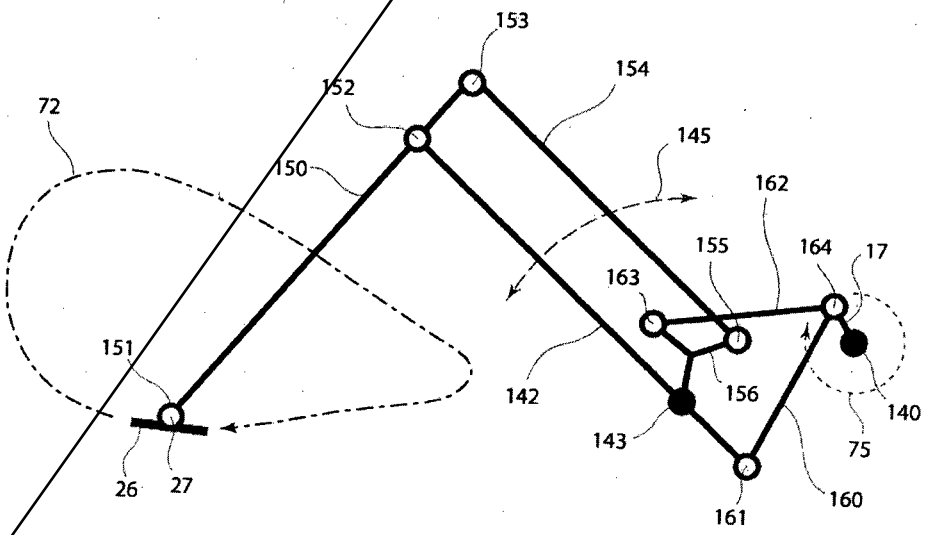

Figure 21

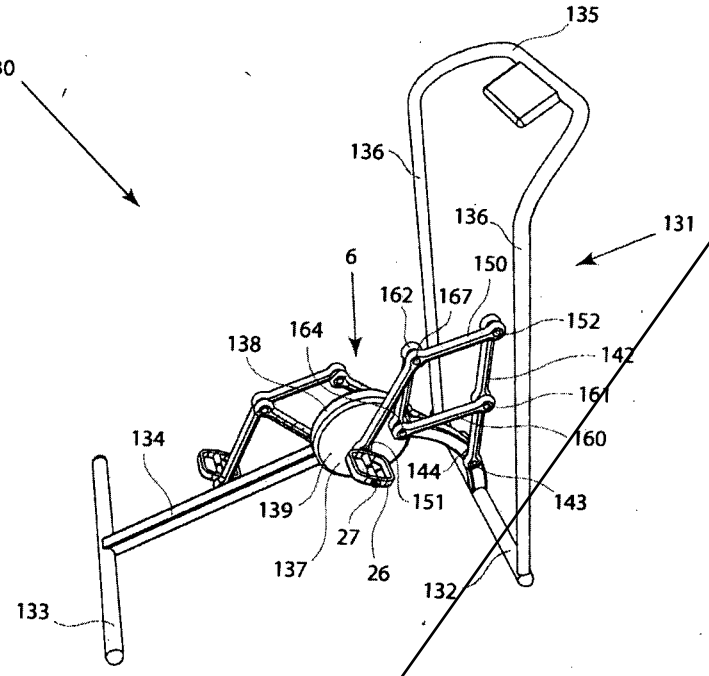

Figure 22

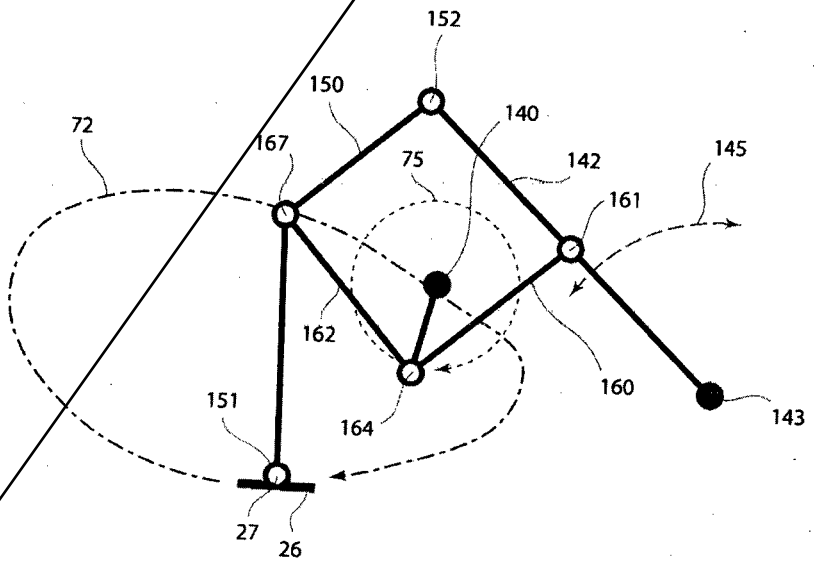

Figure 23

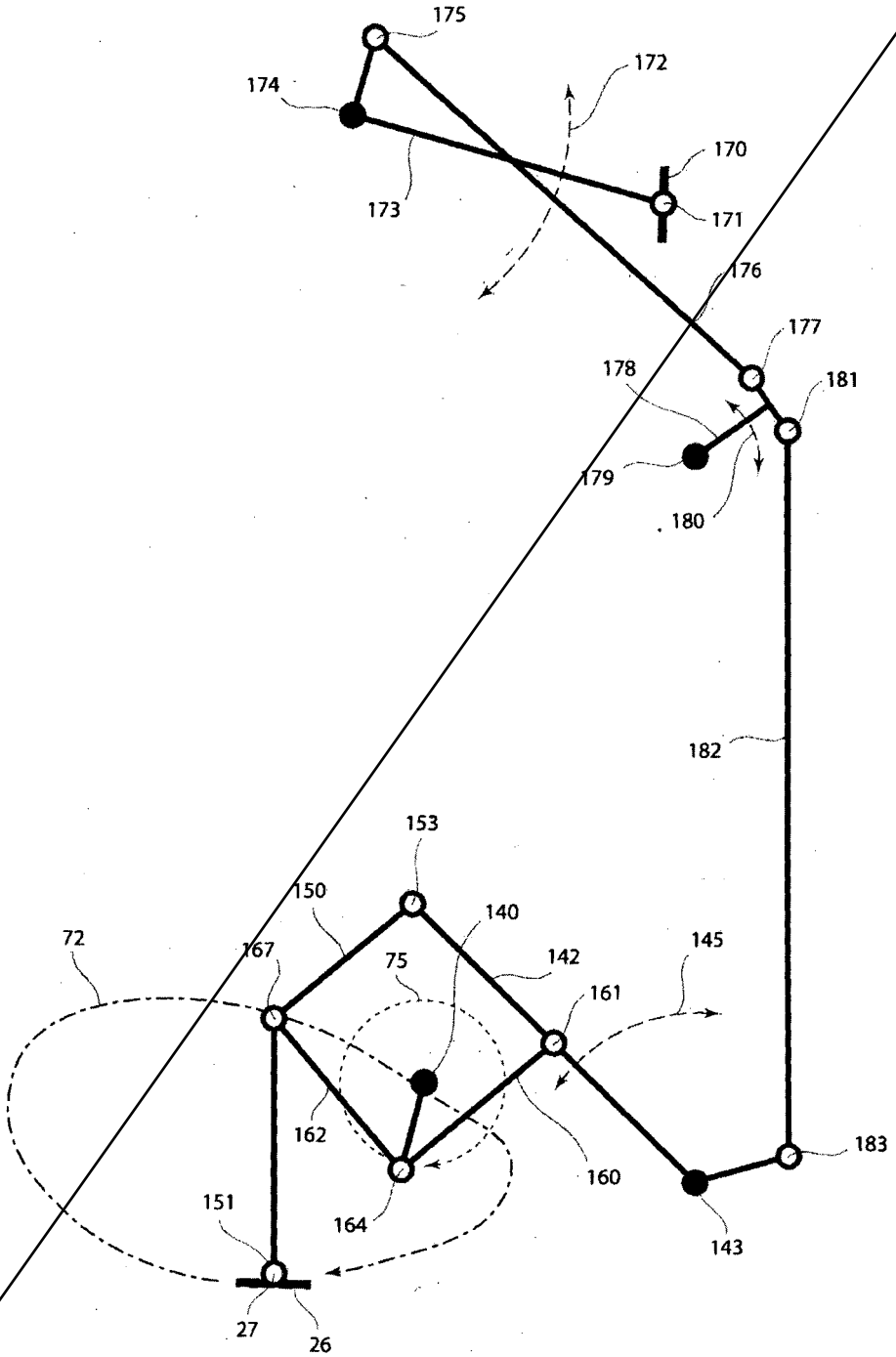
175
174
172
170
173
171
176
177
178
181
179
180
182
153
150
140
72
167
75
142
145
161
162
160
183
151
164
143
27
26

Figure 25

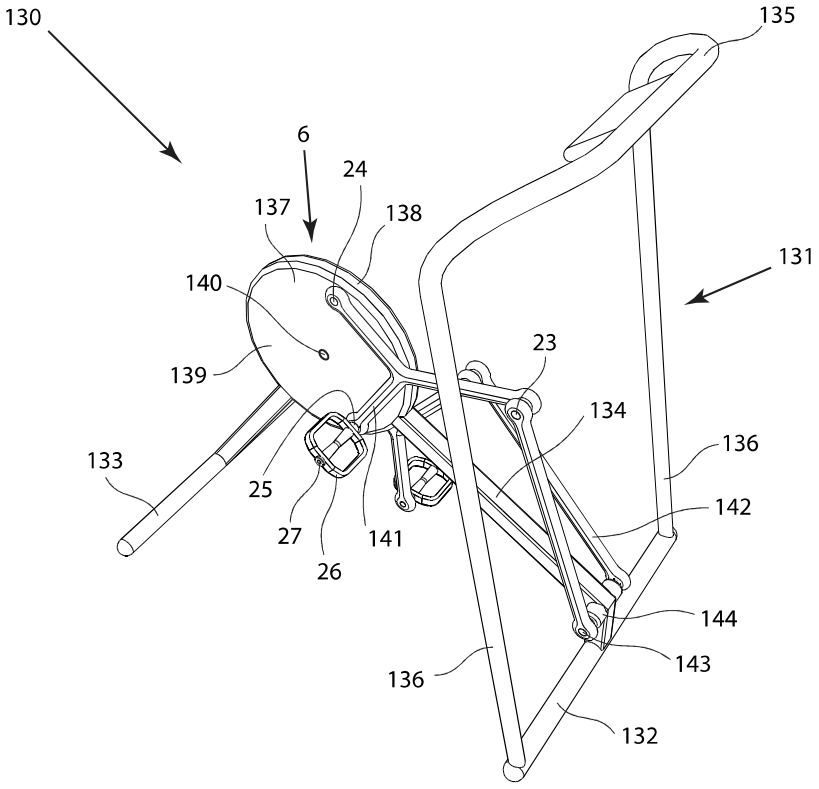

Figure 14

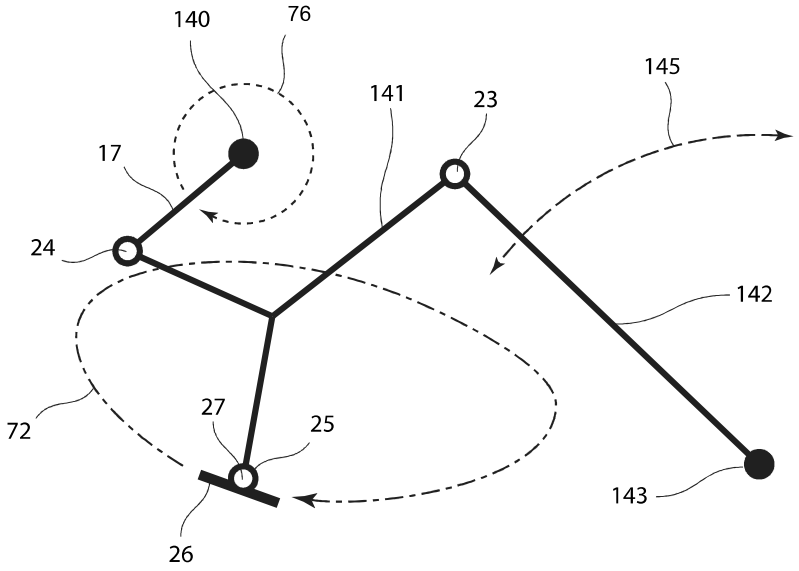

Figure 15

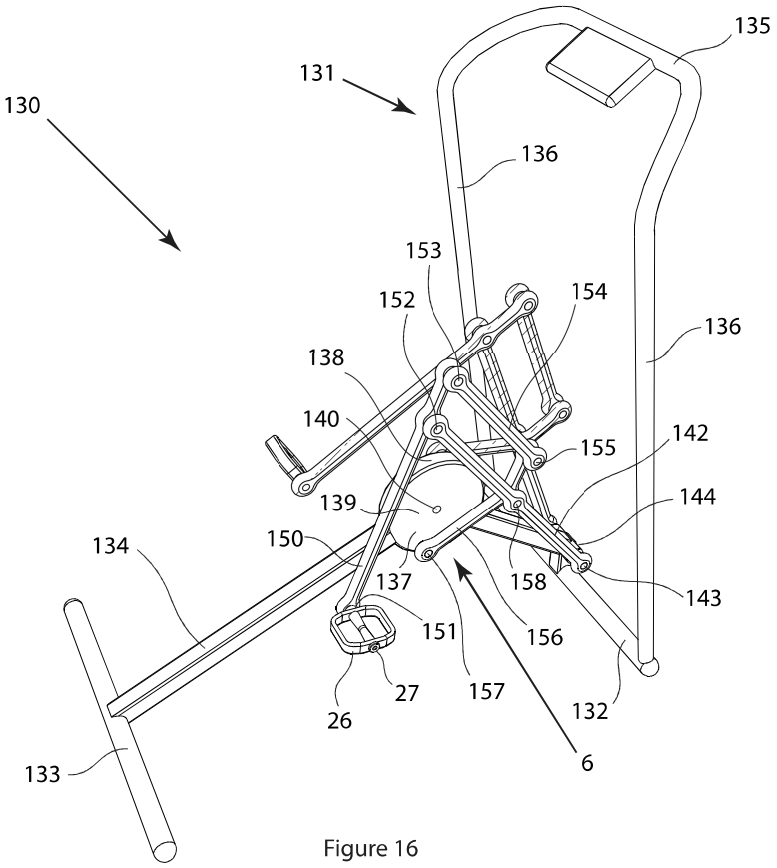

Figure 16

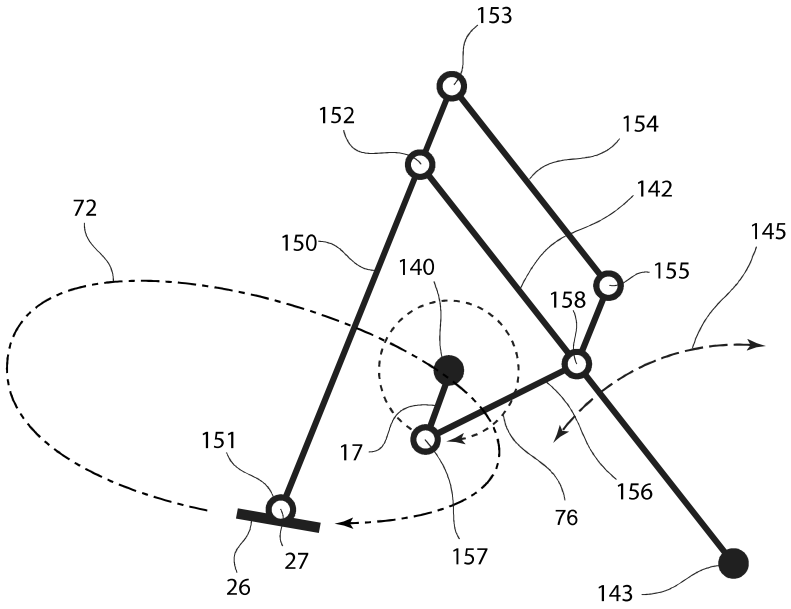

Figure 17

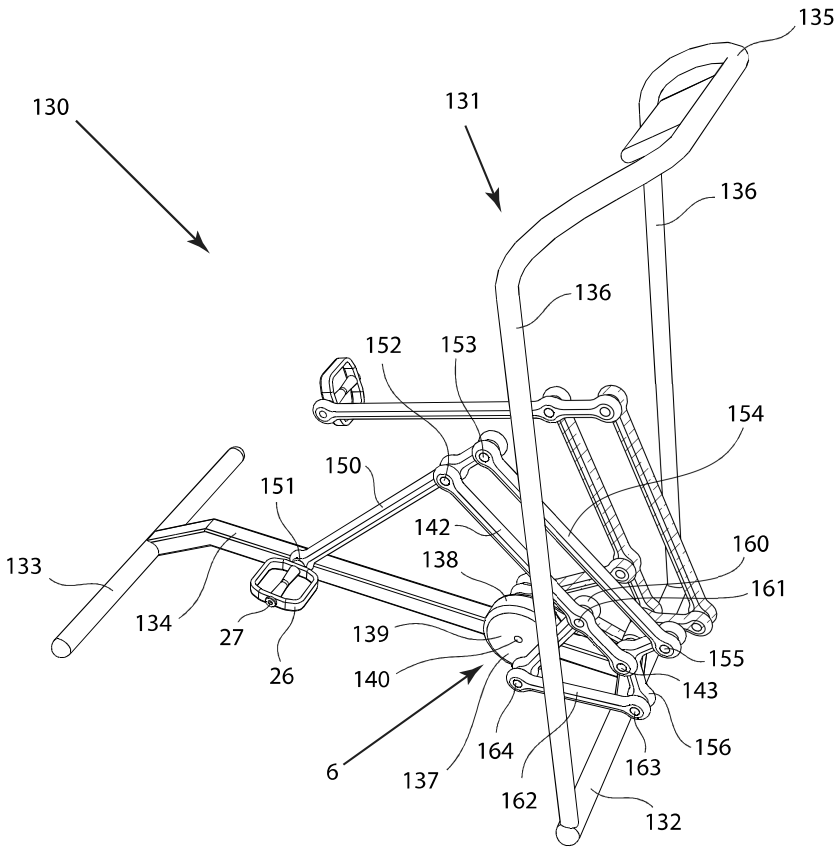

Figure 18

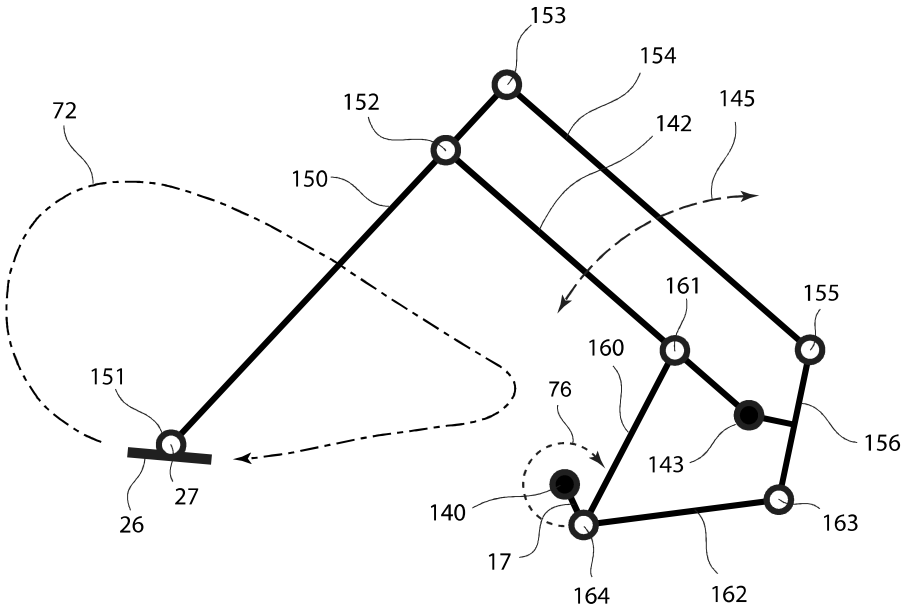

Figure 19

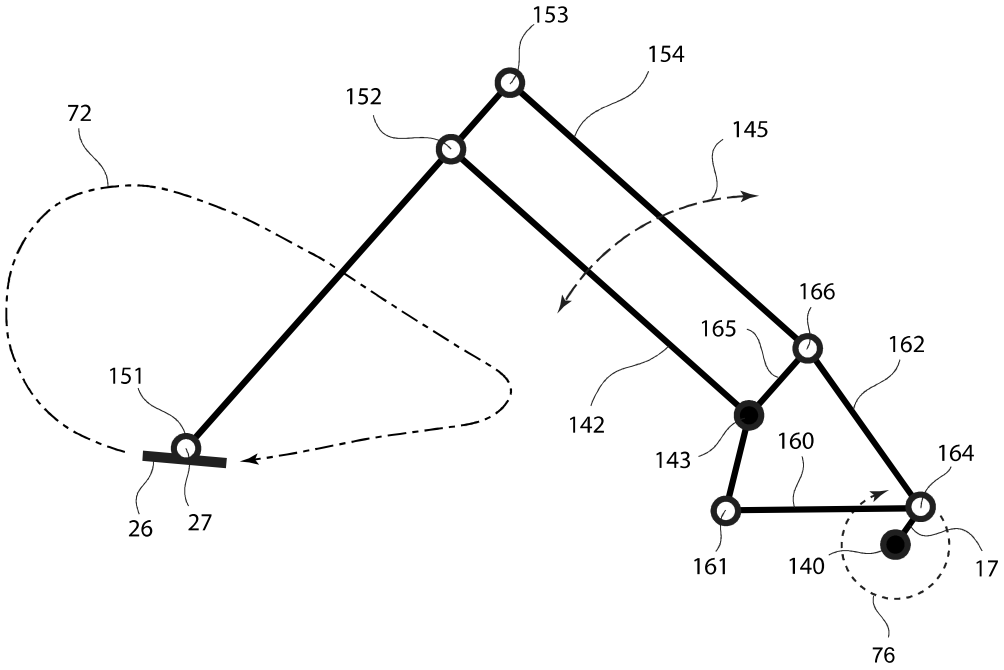

Figure 20

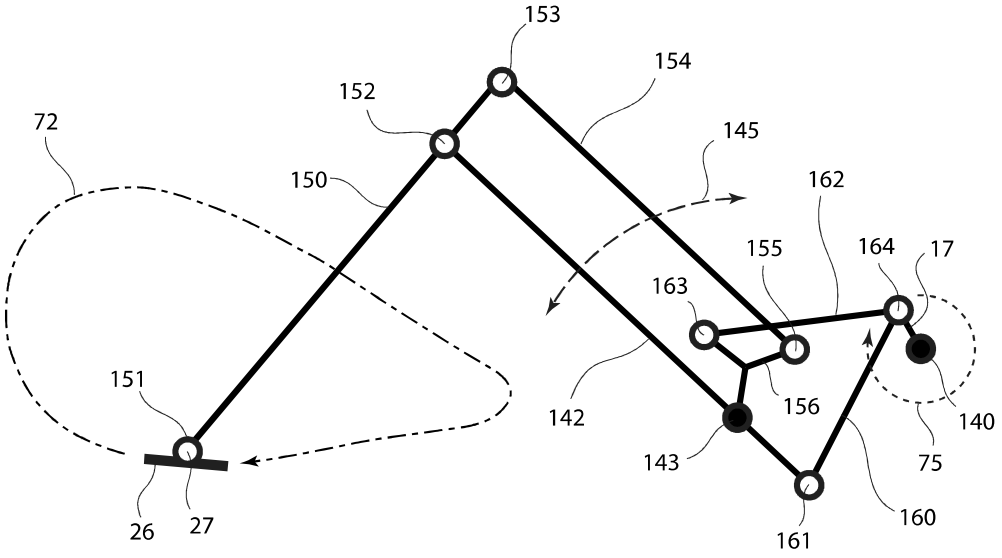

Figure 21

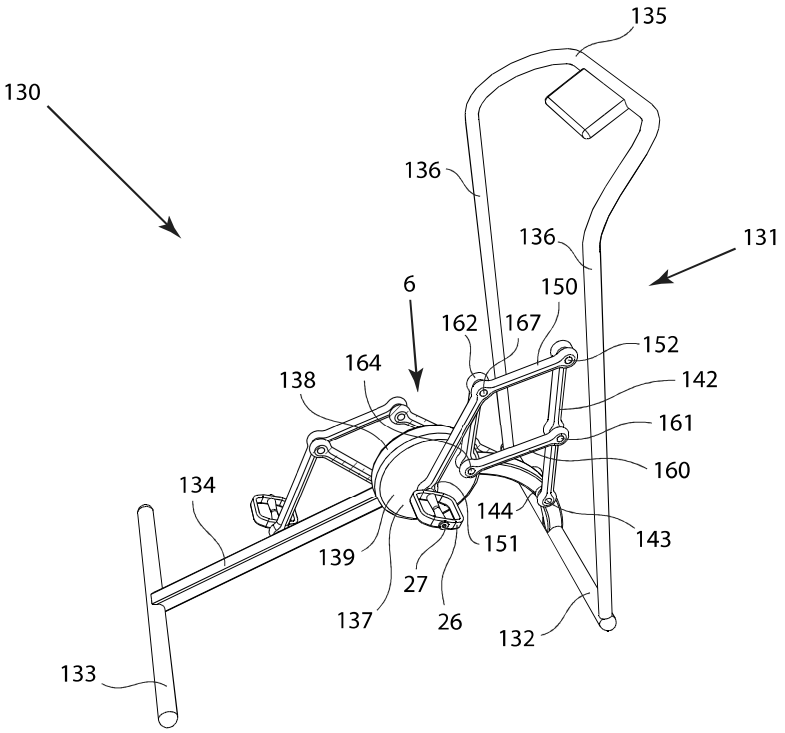

Figure 22

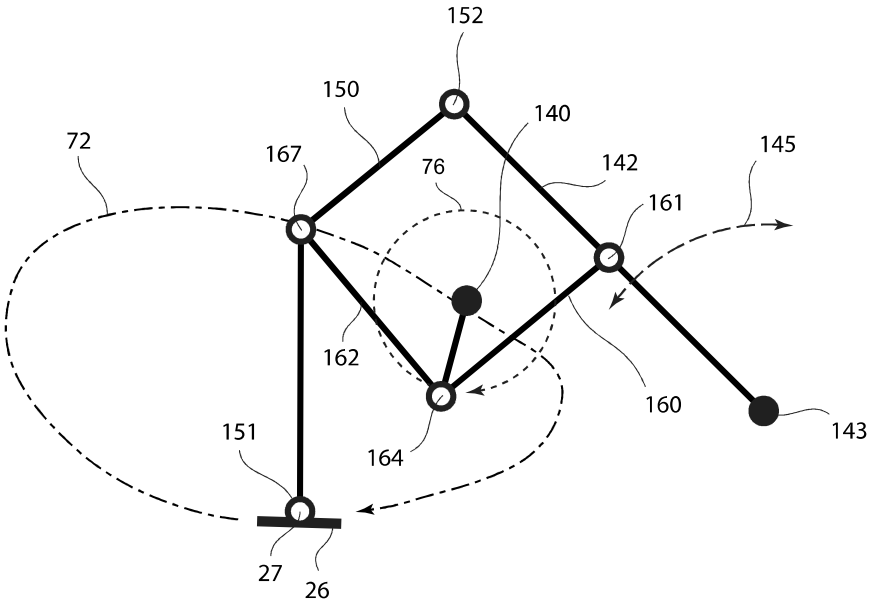

Figure 23

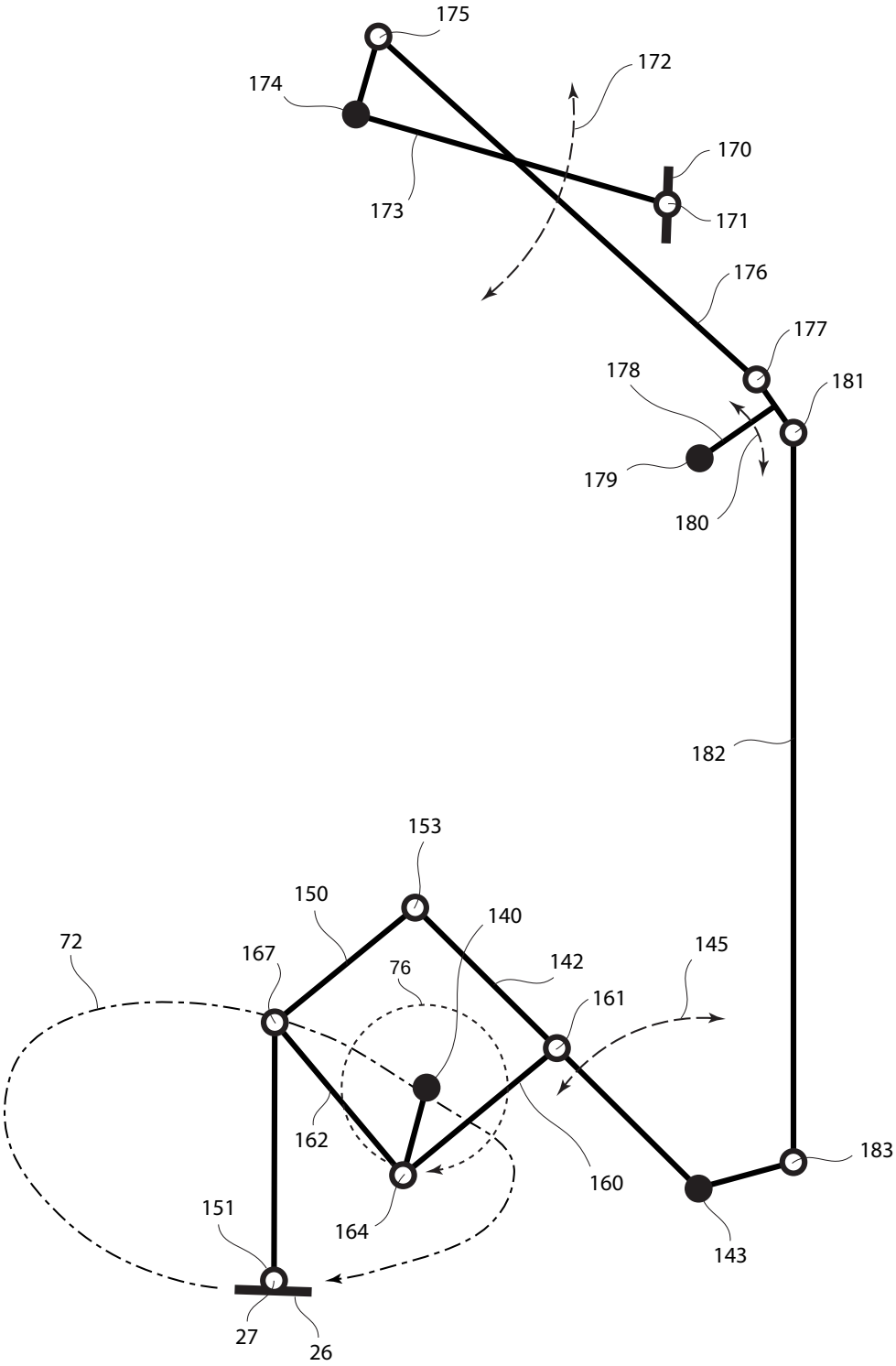
175
172
174
170
173
171
176
177
178
181
179
180
182
153
150
140
72
167
76
142
145
161
162
160
183
151
164
143
27
26

Figure 25