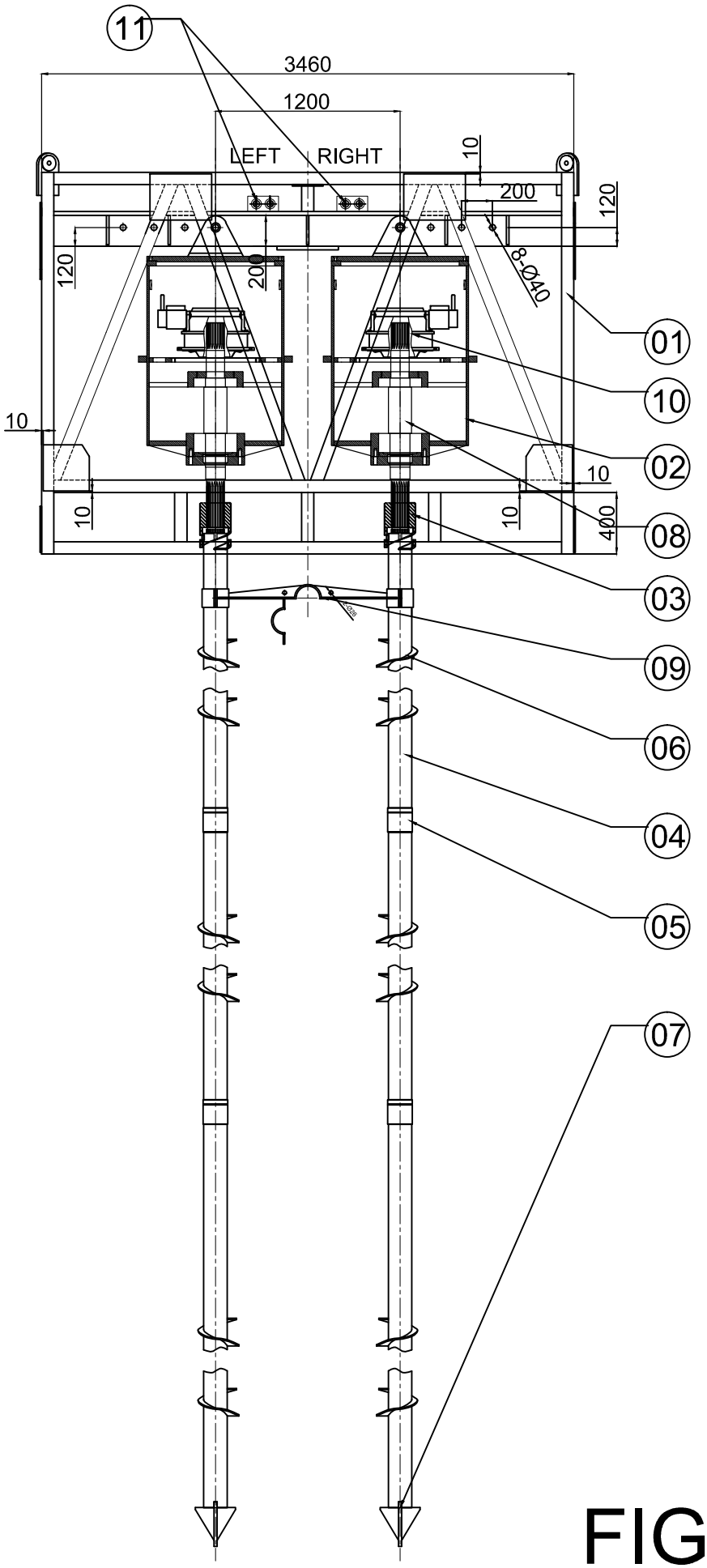

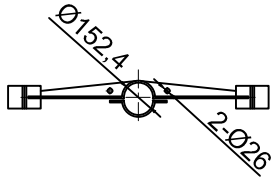

PIPE SIZE -6" ~ 36"
PARTS 09

FIG. 1