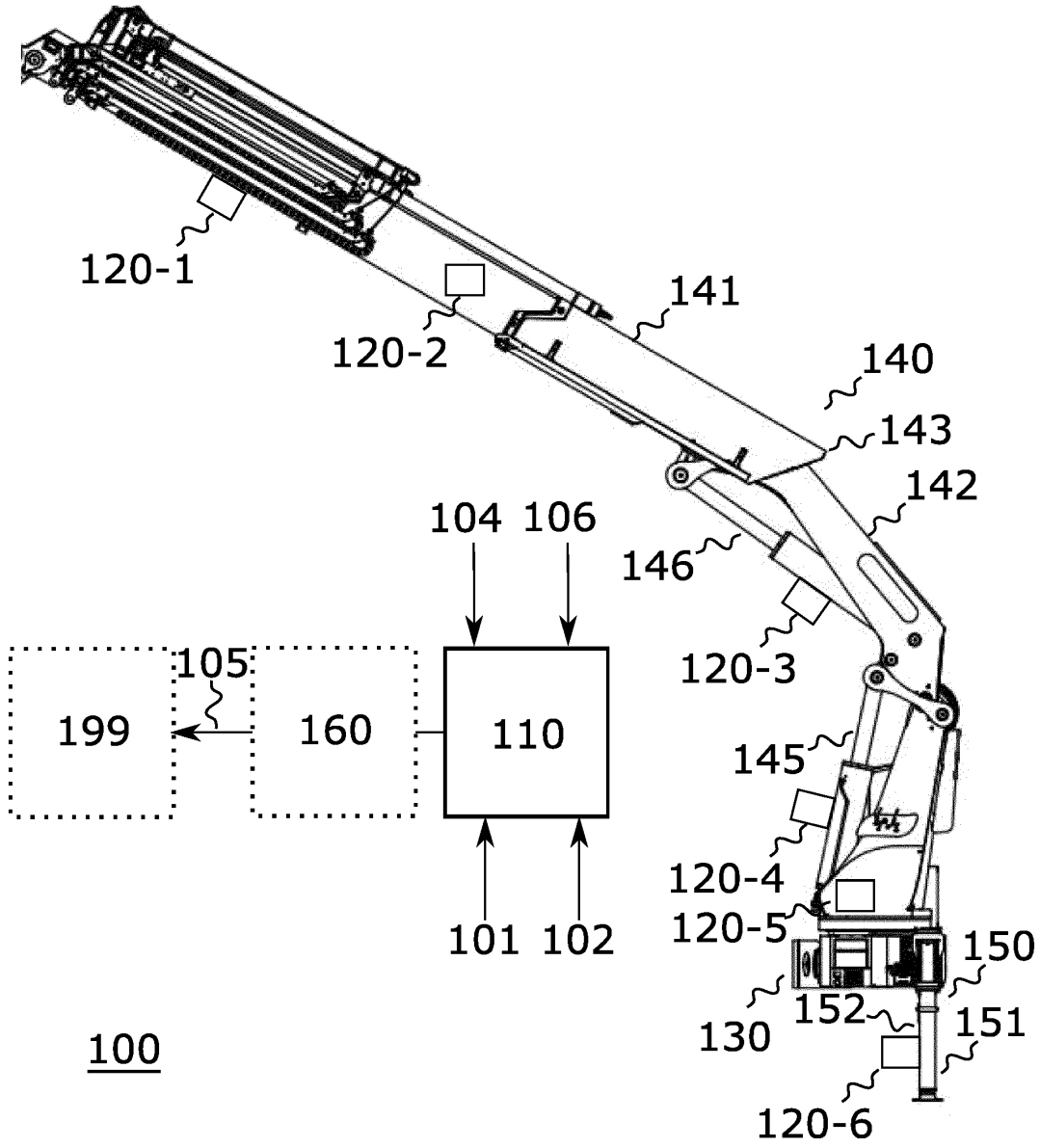
120-1
120-2
141
140
143
142
104
106
146
120-3
105
199
160
110
145
120-4
120-5
150
152
130
151
120-6
101
102
100

Fig. 1

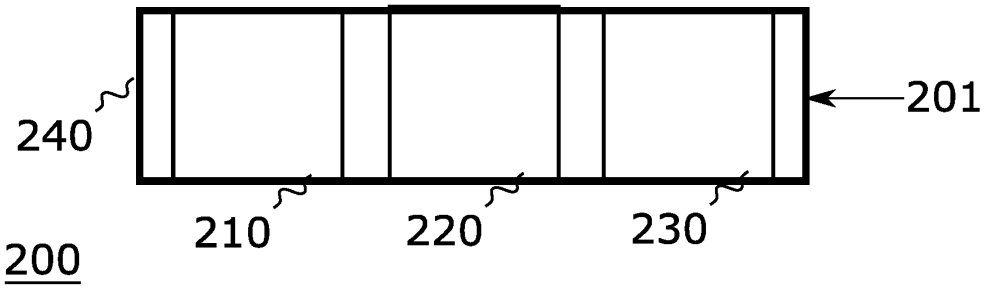

Fig. 2

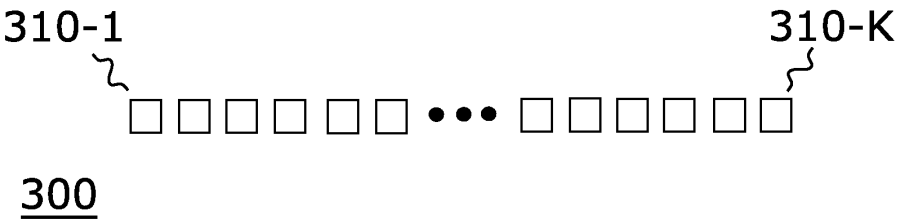

Fig. 3

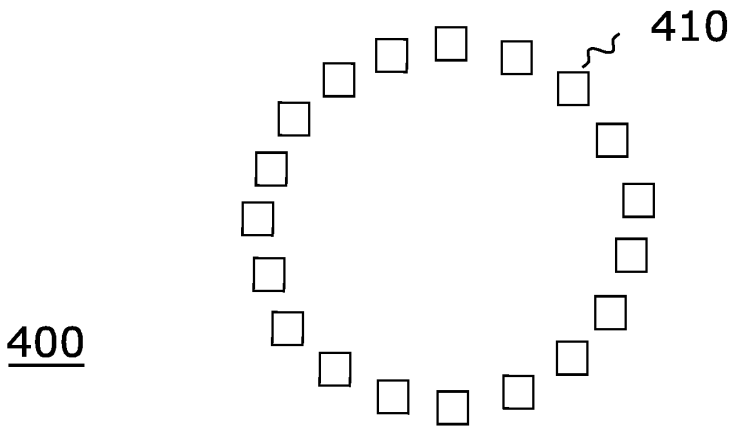

Fig. 4

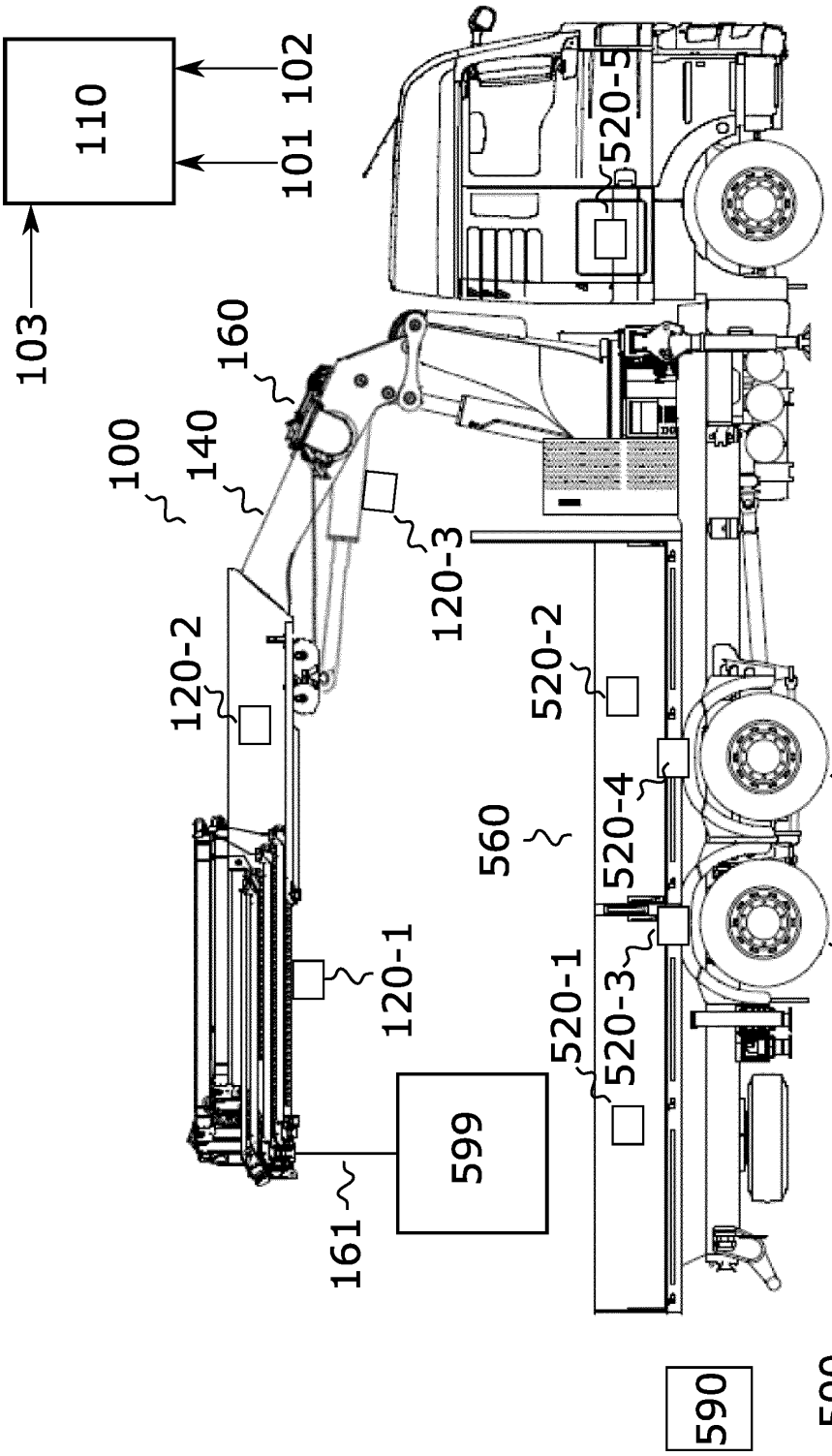
110
101
102
103
100
140
160
120-1
120-2
120-3
520-1
520-2
520-3
520-4
520-5
560
599
161
501
502
590
500

Fig. 5

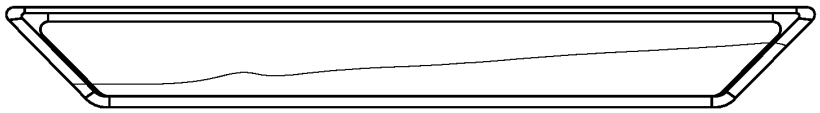
600

FIG. 6a

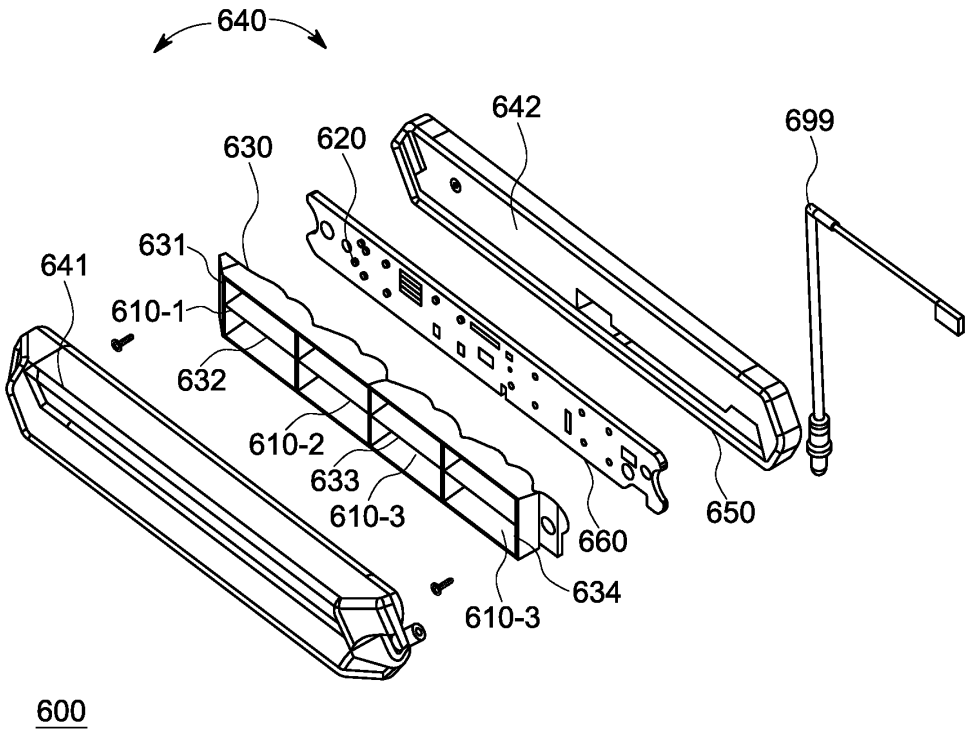
640
642
699
630
620
631
641
610-1
632
610-2
633
610-3
660
650
634
610-3
600

FIG. 6b

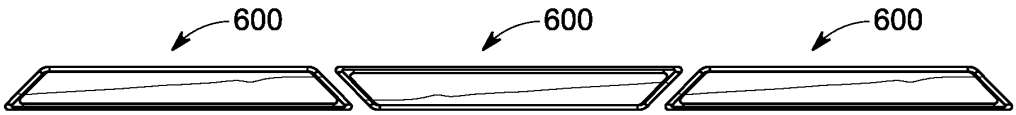

FIG. 7

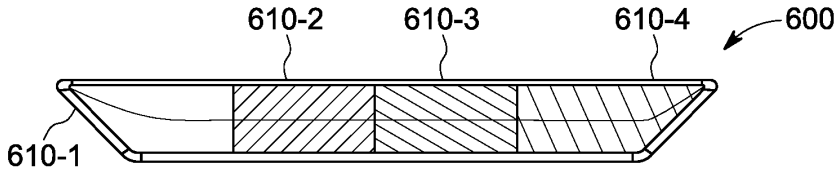

FIG. 8a

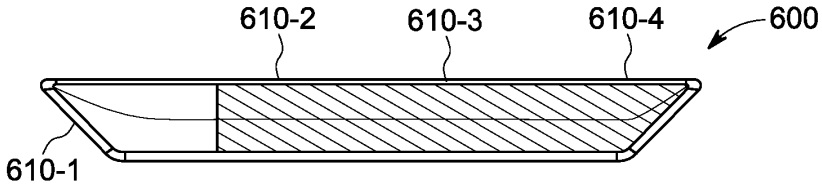

FIG. 8b

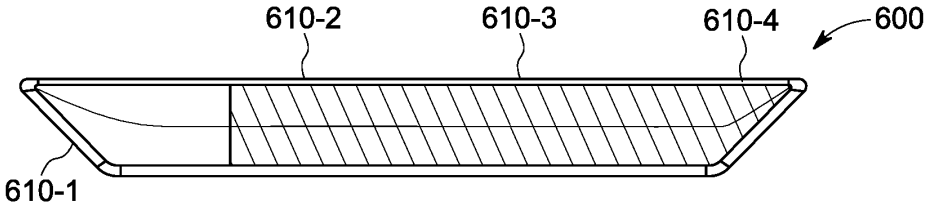

FIG. 8c

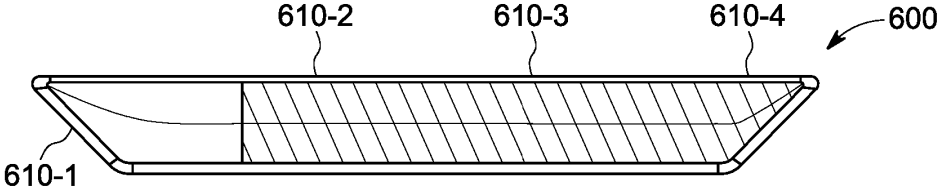

FIG. 8d

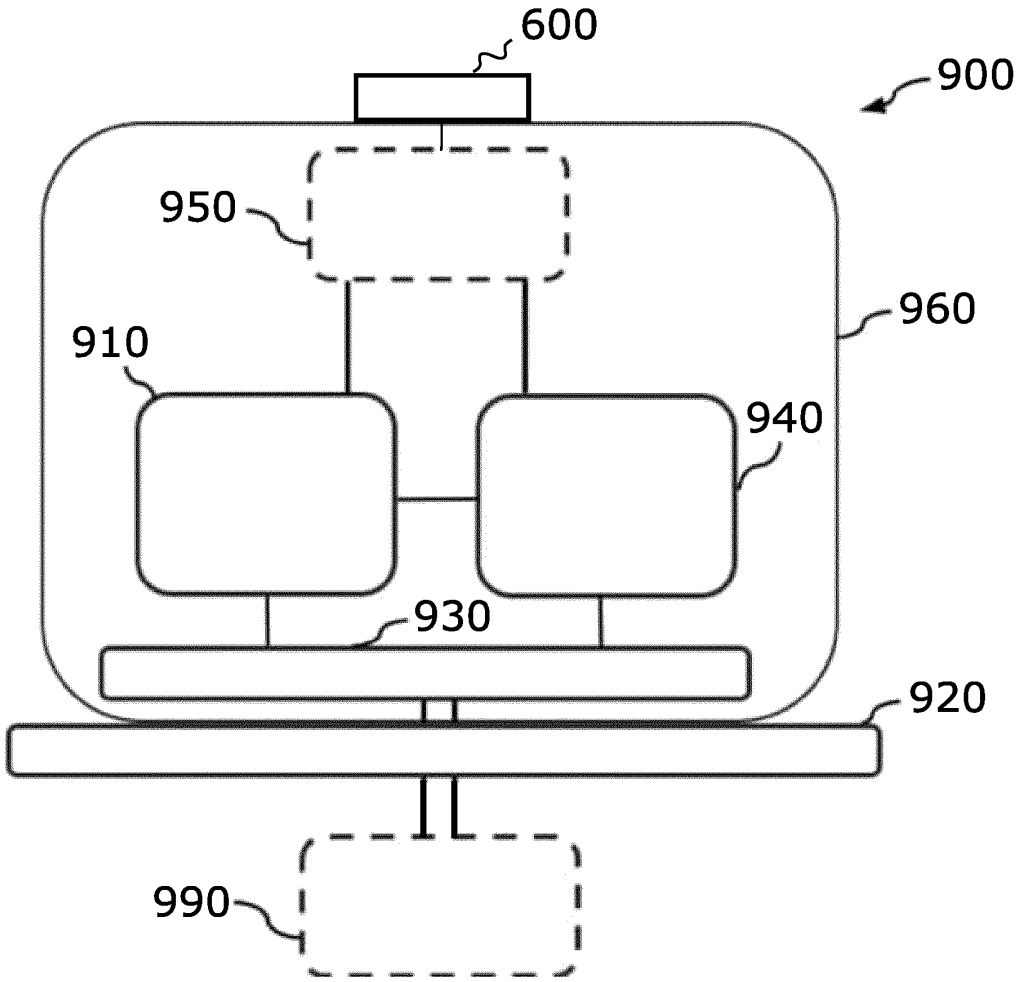

Fig. 9

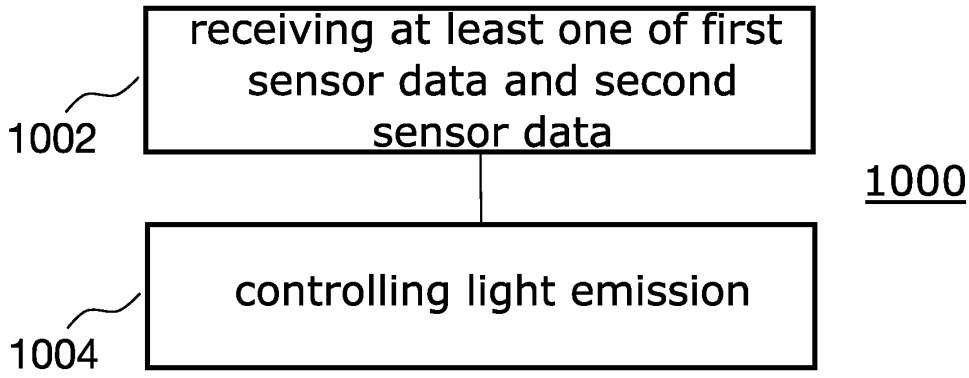
receiving at least one of first sensor data and second sensor data
1002
1000
controlling light emission
1004

Fig. 10