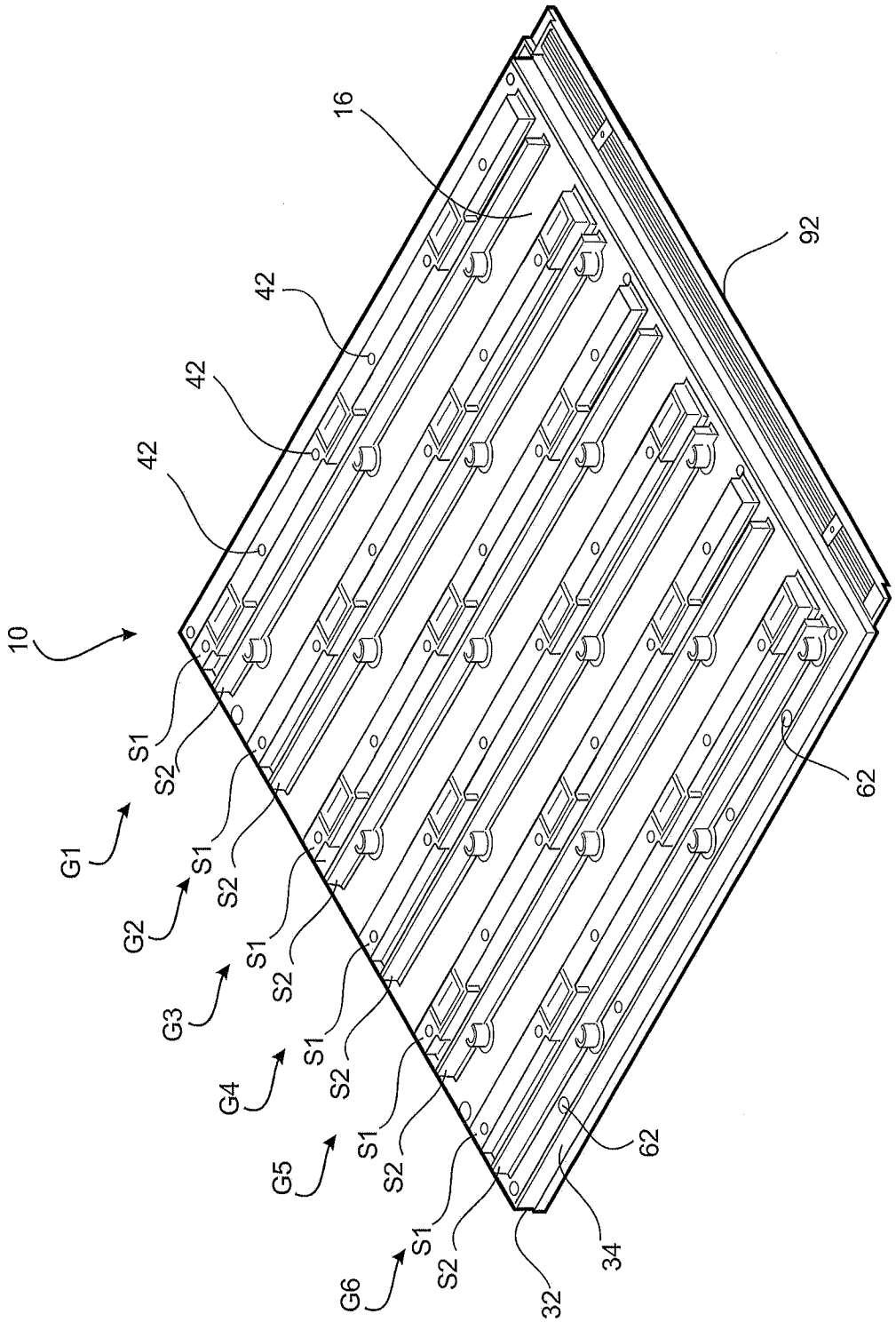
10
16
42
42
42
92
S1
S2
S1
S2
S1
S2
S1
S2
S1
S2
S1
S2
G1
G2
G3
G4
G5
G6
62
62
32
34

Fig 1

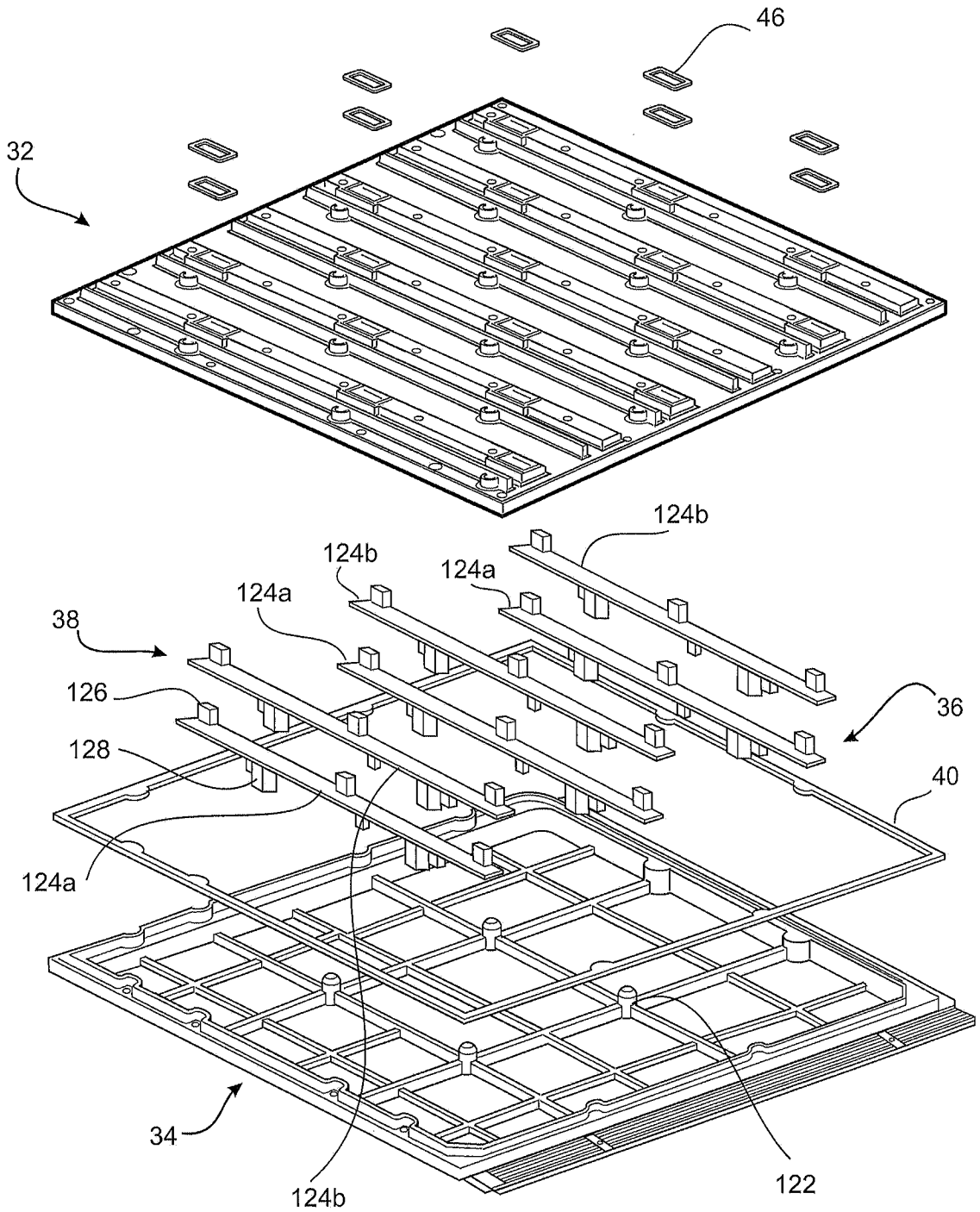

Fig 2

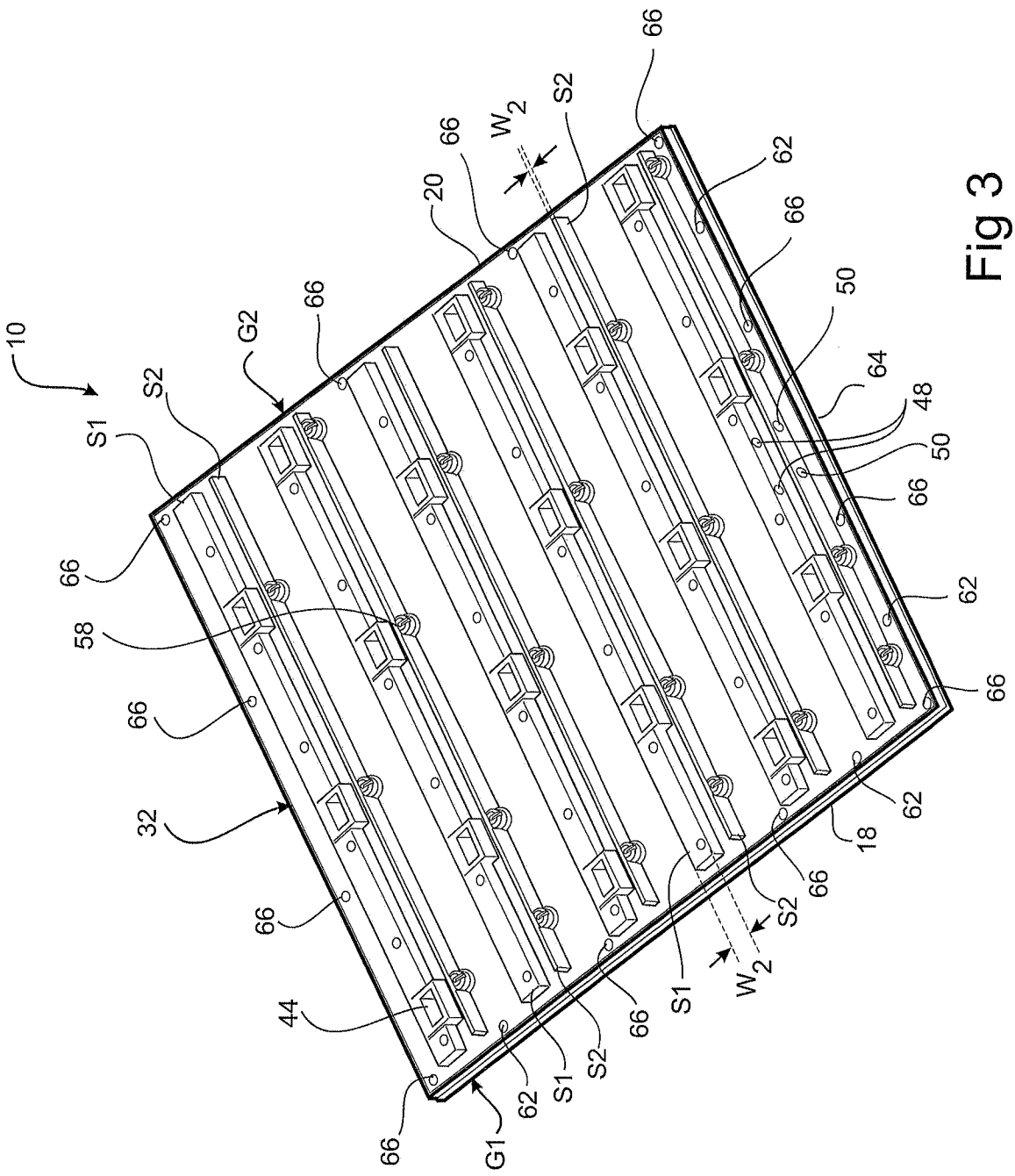

Fig 3

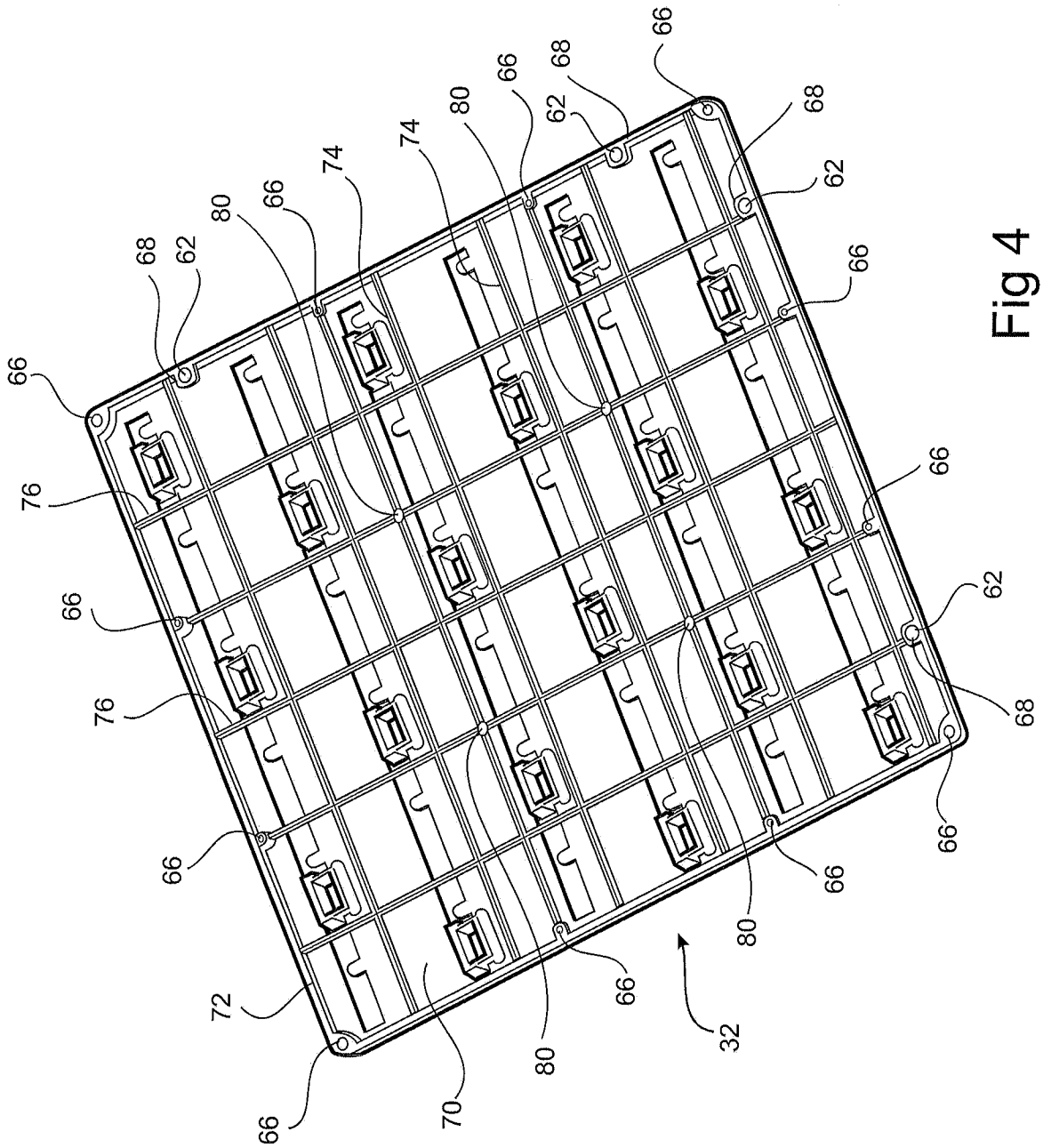

Fig 4

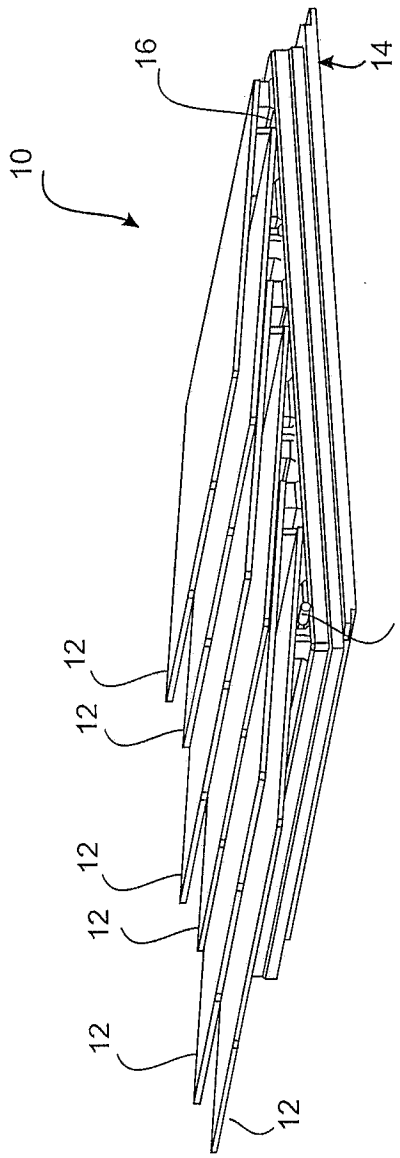

Fig 5a

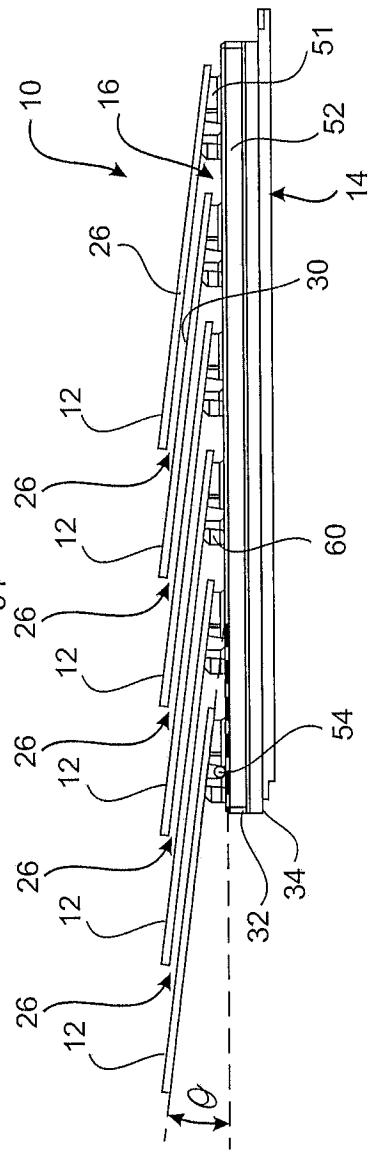

Fig 5b

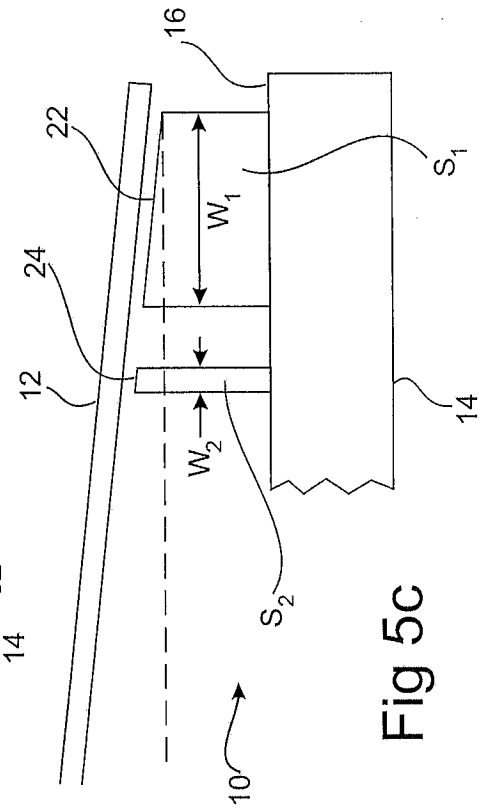

Fig 5c

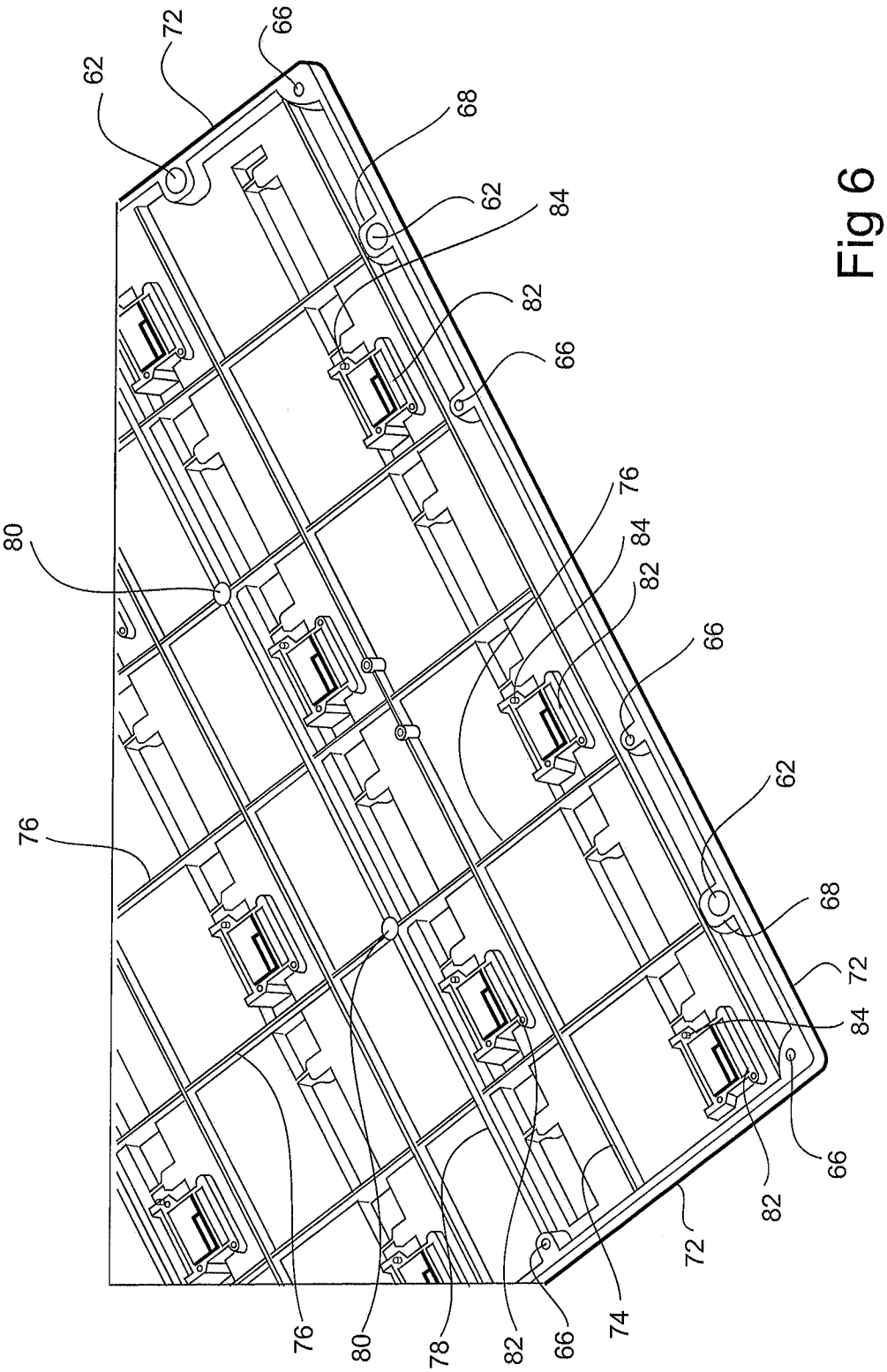
62
72
66
68
62
84
82
66
76
80
84
82
66
62
76
68
72
84
66
82
72
74
66
82
78
80
76

Fig 6

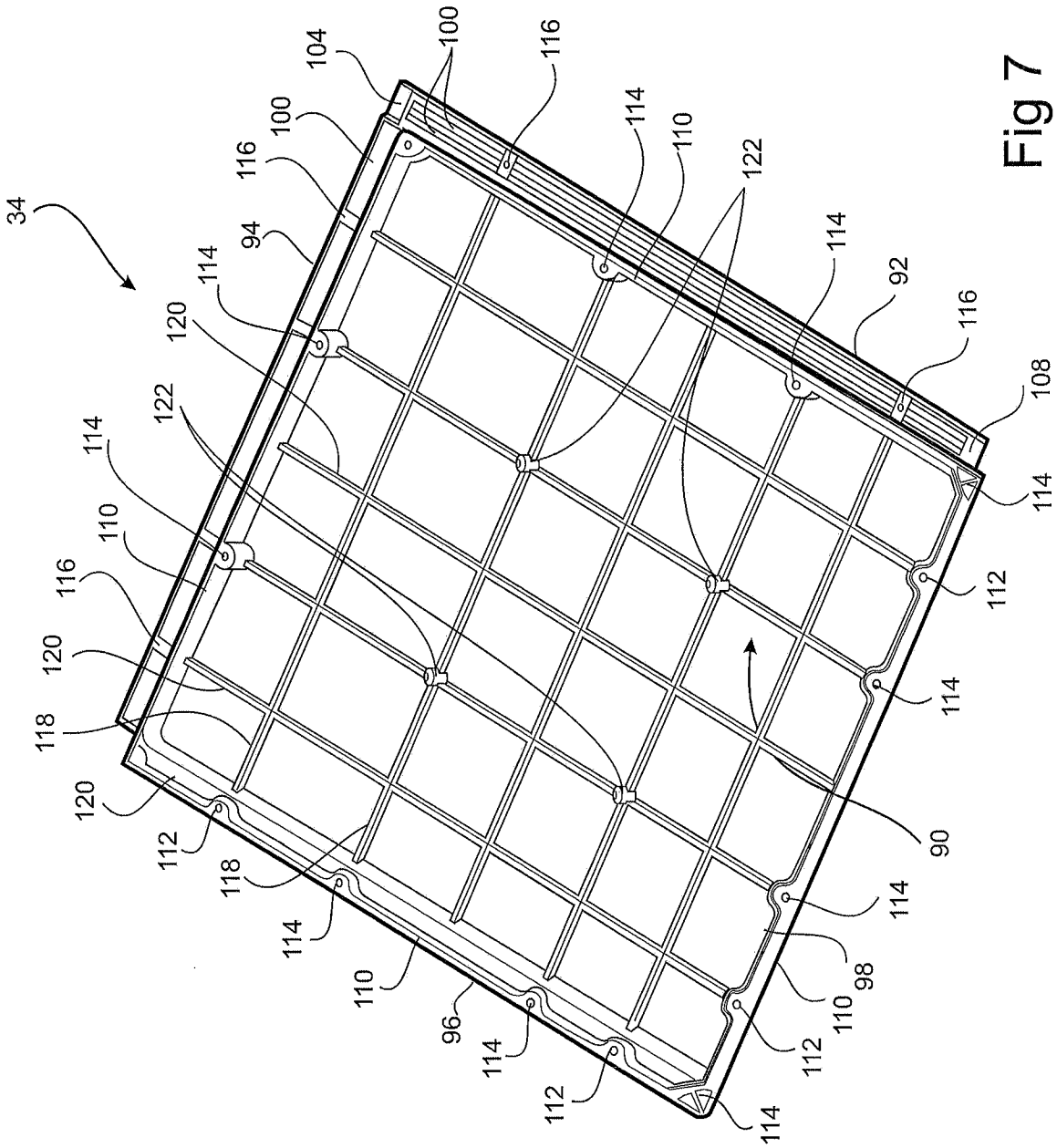

Fig 7

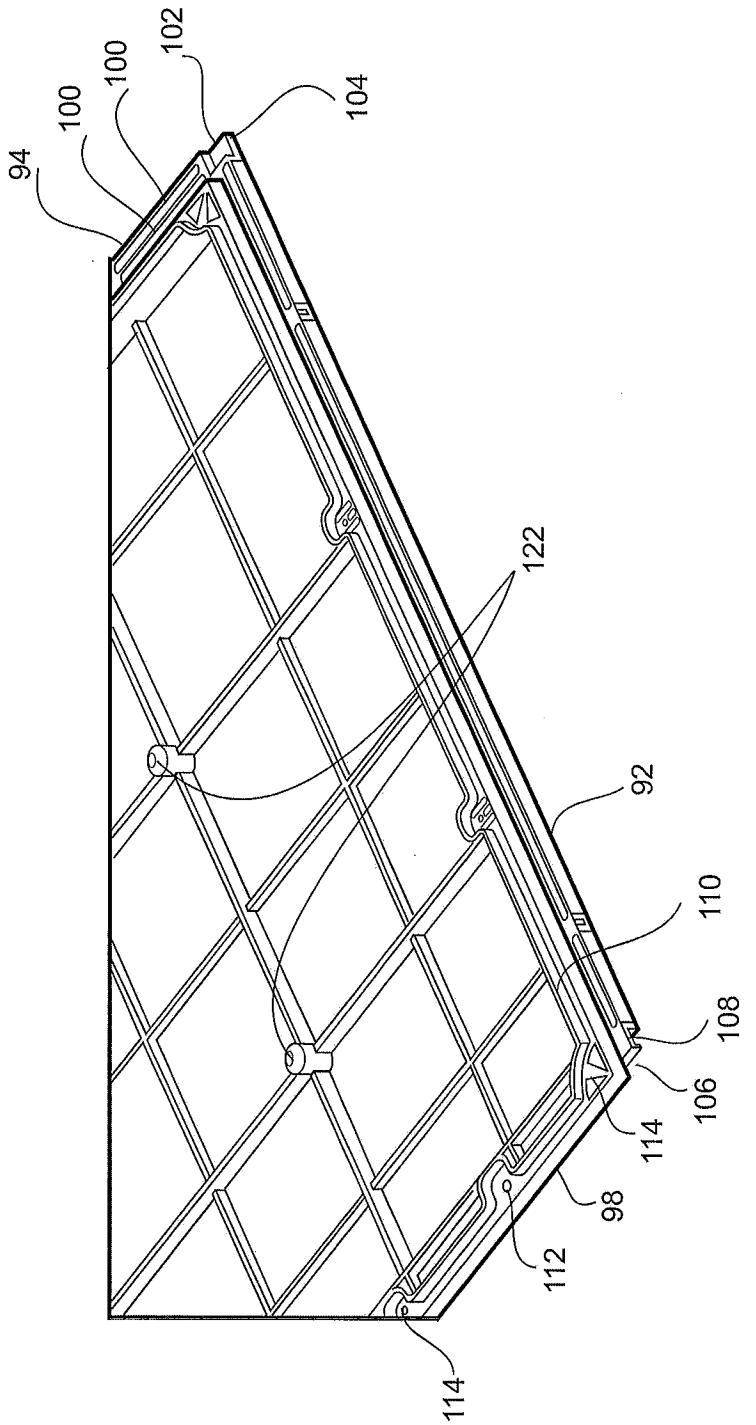

Fig 8

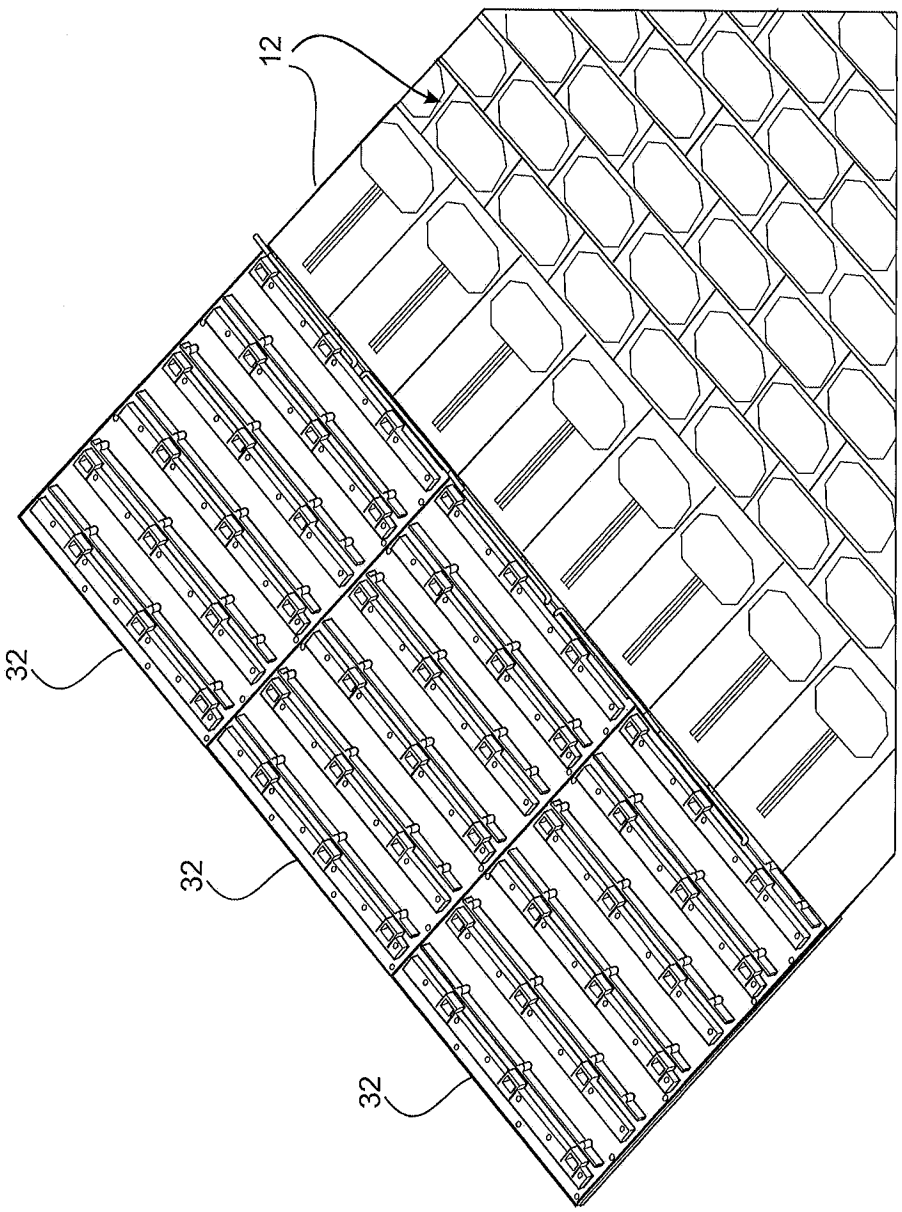

Fig 9a

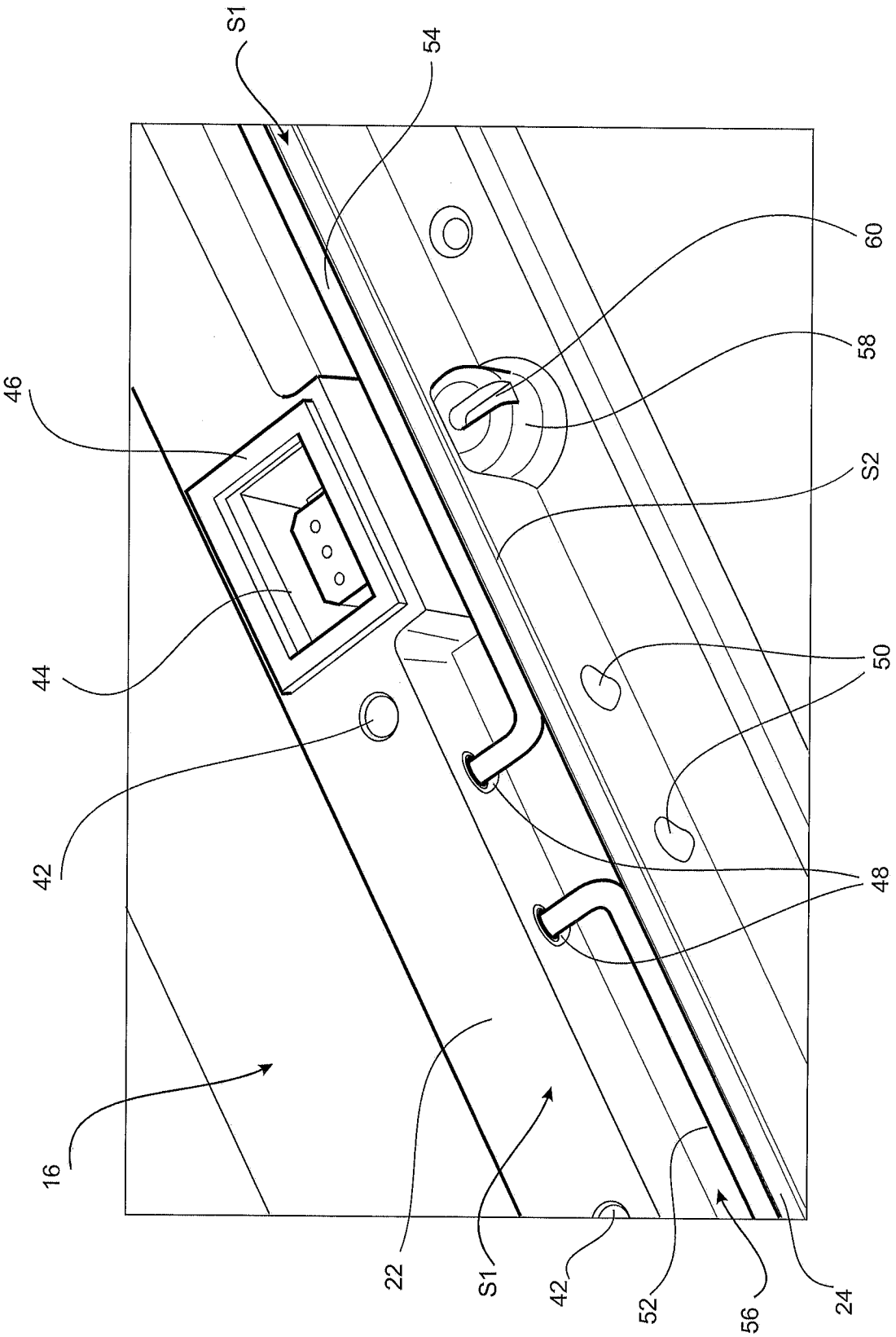

Fig 9b

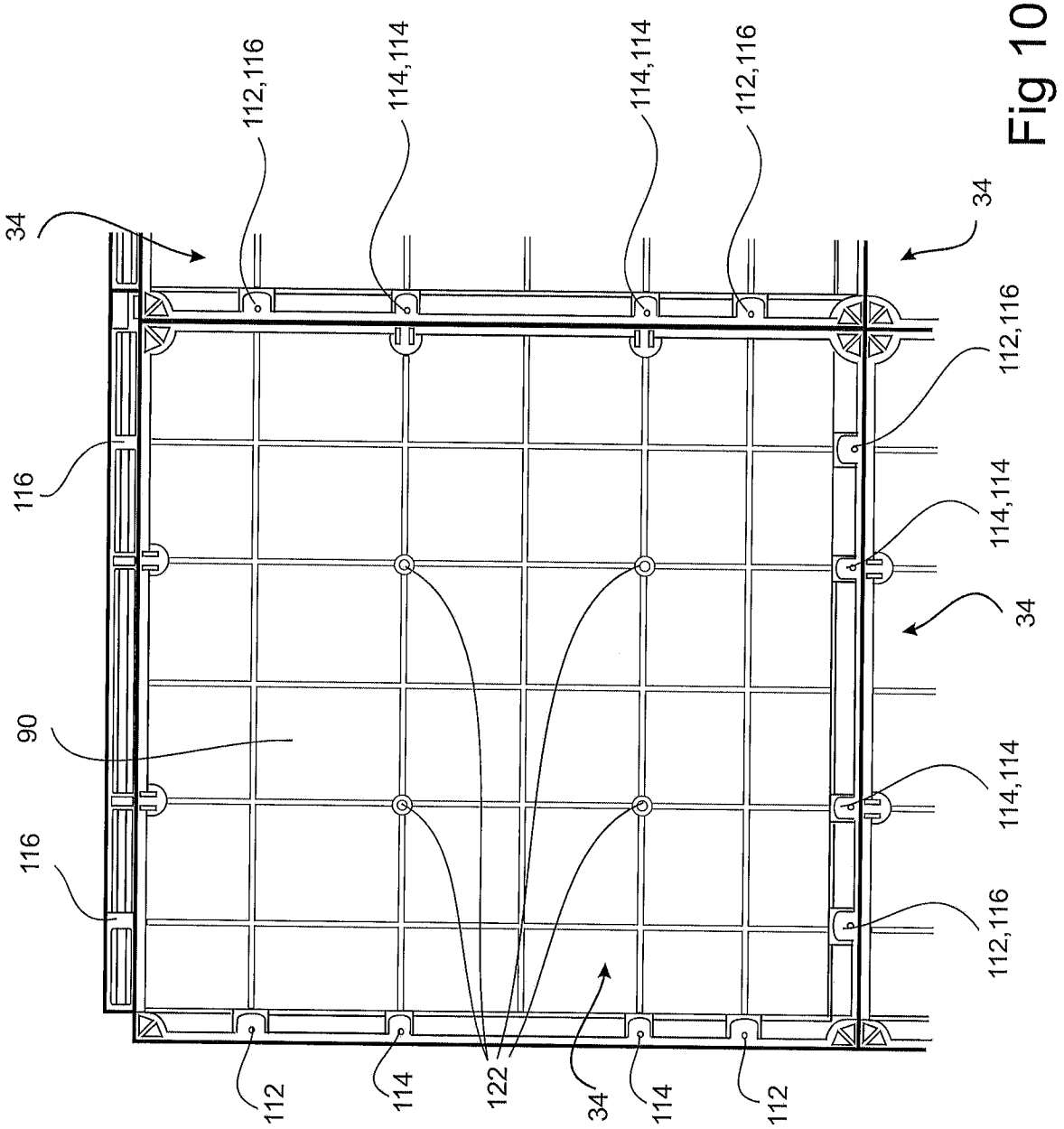
112,116
114,114
114,114
112,116
34
34
116
112,116
114,114
34
90
114,114
116
112,116
112
114
122
34
114
112

Fig 10

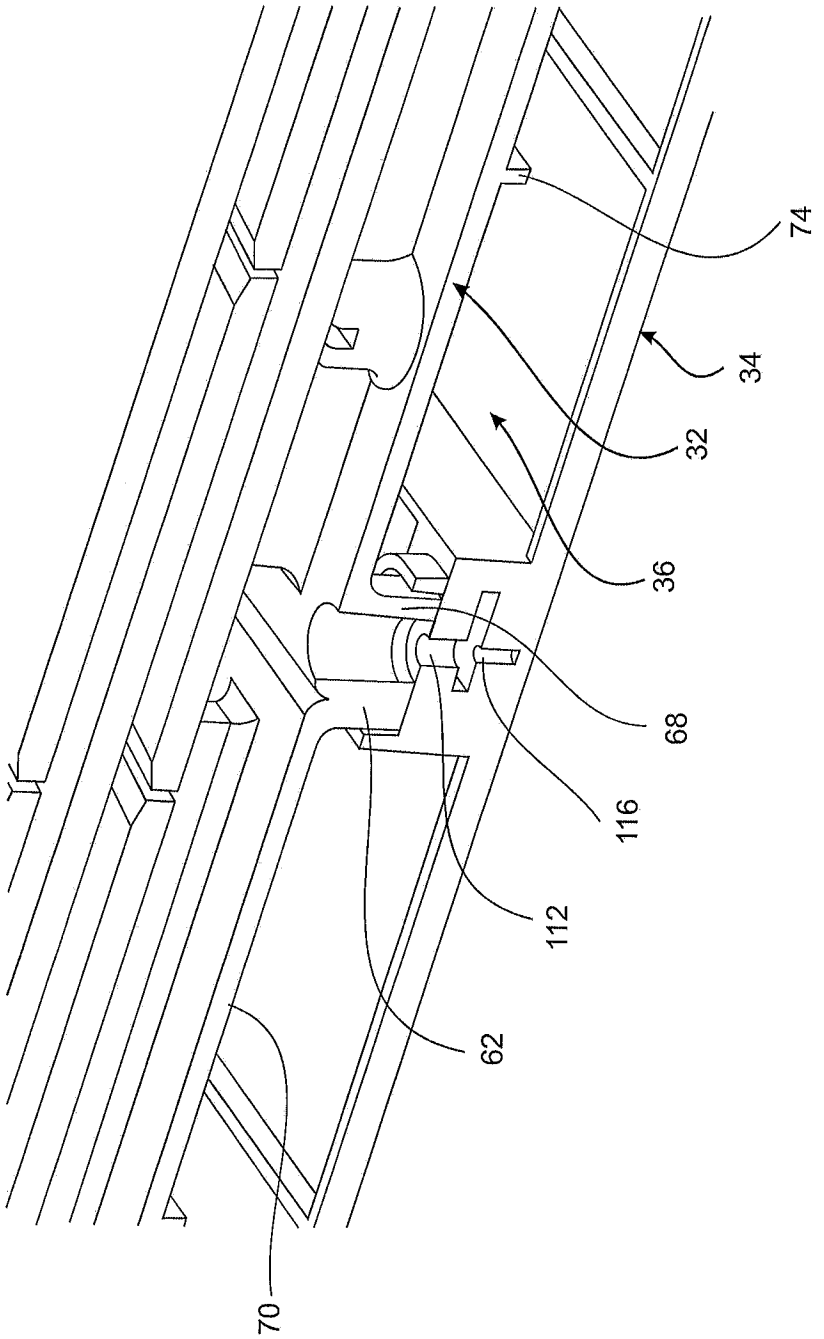

Fig 11

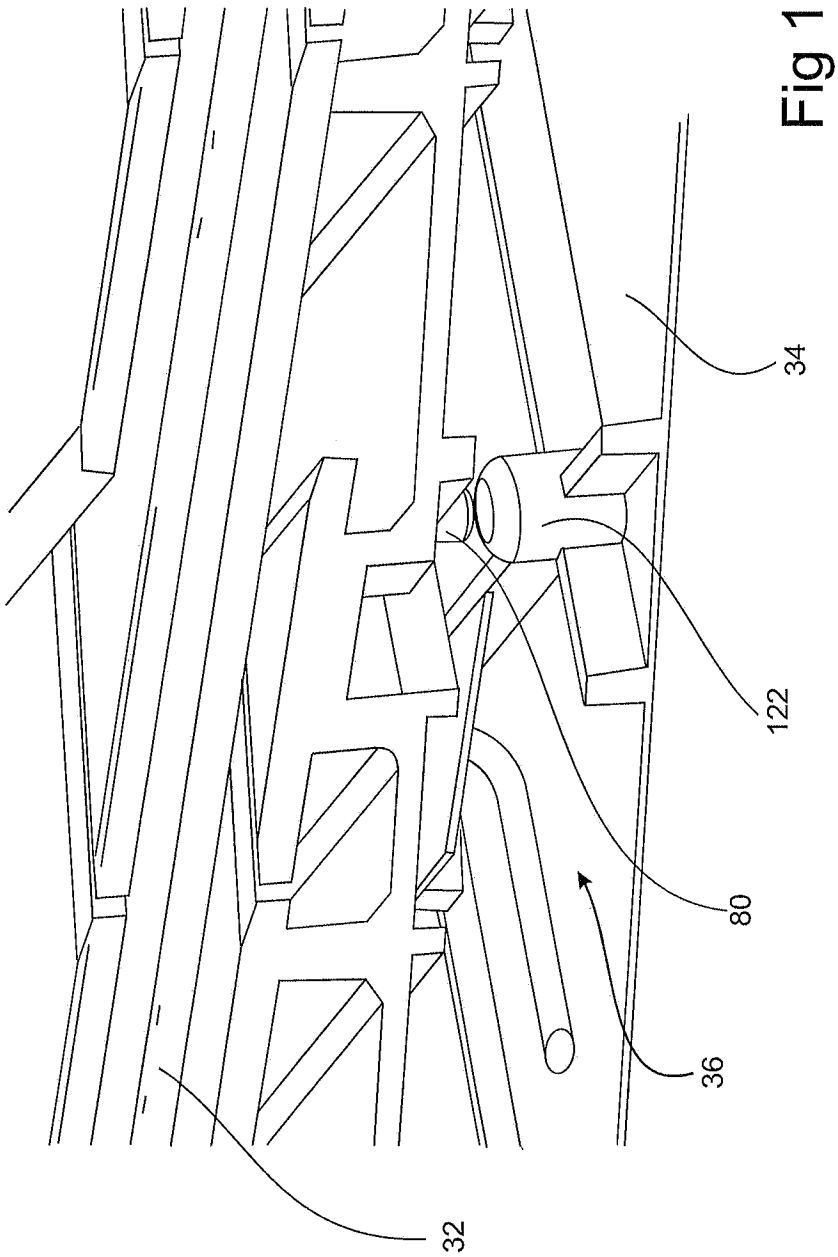

Fig 12