(12) INTERNATIONAL APPLICATION PUBLISHED UNDER THE PATENT COOPERATION TREATY (PCT)

(19) World Intellectual Property Organization
International Bureau

(43) International Publication Date
1 April 2010 (01.04.2010)

PCT

(10) International Publication Number
WO 2010/037078 A1

(51) International Patent Classification:
B26B 21/22 (2006.01) *B26B 21/56* (2006.01)

(21) International Application Number:
PCT/US2009/058696

(22) International Filing Date:
29 September 2009 (29.09.2009)

(25) Filing Language: English

(26) Publication Language: English

(30) Priority Data:
61/101,048 29 September 2008 (29.09.2008) US

(71) Applicant *(for all designated States except US)*: **THE GILLETTE COMPANY** [US/US]; Prudential Tower Building, Boston, MA 02199 (US).

(72) Inventor; and

(75) Inventor/Applicant *(for US only)*: **PETERSON, Mark** [GB/GB]; The Oaks, Basingstoke Road, Three Mile Cross, Reading, Berkshire RG7 1AS (GB).

(74) Common Representative: **THE GILLETTE COMPANY**; c/o Eileen L. Hughett, The Procter & Gamble Company, Global Patent Services, 299 East Sixth Street, Sycamore Building, 4th Floor Cincinnati, OH 45202 (US).

(81) Designated States *(unless otherwise indicated, for every kind of national protection available)*: AE, AG, AL, AM, AO, AT, AU, AZ, BA, BB, BG, BH, BR, BW, BY, BZ, CA, CH, CL, CN, CO, CR, CU, CZ, DE, DK, DM, DO, DZ, EC, EE, EG, ES, FI, GB, GD, GE, GH, GM, GT, HN, HR, HU, ID, IL, IN, IS, JP, KE, KG, KM, KN, KP, KR, KZ, LA, LC, LK, LR, LS, LT, LU, LY, MA, MD, ME, MG, MK, MN, MW, MX, MY, MZ, NA, NG, NI, NO, NZ, OM, PE, PG, PH, PL, PT, RO, RS, RU, SC, SD, SE, SG, SK, SL, SM, ST, SV, SY, TJ, TM, TN, TR, TT, TZ, UA, UG, US, UZ, VC, VN, ZA, ZM, ZW.

(84) Designated States *(unless otherwise indicated, for every kind of regional protection available)*: ARIPO (BW, GH, GM, KE, LS, MW, MZ, NA, SD, SL, SZ, TZ, UG, ZM, ZW), Eurasian (AM, AZ, BY, KG, KZ, MD, RU, TJ,

[Continued on next page]

WO 2010/037078 A1

(54) Title: RAZOR CARTRIDGES WITH PERFORATED BLADE ASSEMBLIES

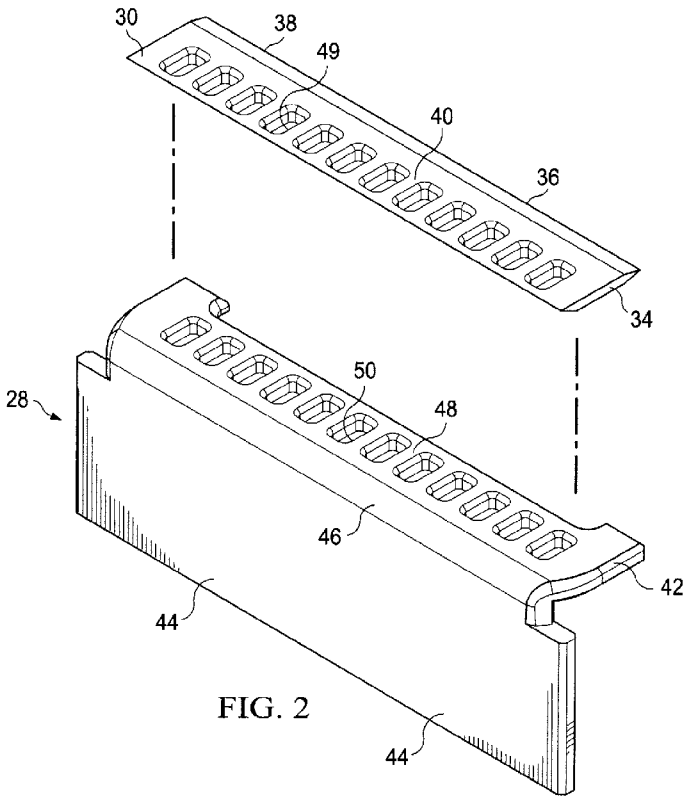

FIG. 2

(57) Abstract: A razor cartridge (12) comprising a housing (20), a guard (22) disposed toward a front portion of the housing, a cap (24) disposed toward a rear portion of the housing, a plurality of bent blade assemblies (28), wherein at least one of the blade assemblies comprises one or more perforations (49) along a length of the assembly. In another embodiment, a razor cartridge comprising a housing, a guard disposed toward a front portion of the housing, a cap disposed toward a rear portion of the housing, a plurality of integrally formed bent blade assemblies, wherein each of the blade assemblies comprises one or more perforations along a length of the assembly.

TM), European (AT, BE, BG, CH, CY, CZ, DE, DK, EE, ES, FI, FR, GB, GR, HR, HU, IE, IS, IT, LT, LU, LV, MC, MK, MT, NL, NO, PL, PT, RO, SE, SI, SK, SM, TR), OAPI (BF, BJ, CF, CG, CI, CM, GA, GN, GQ, GW, ML, MR, NE, SN, TD, TG).

Published:

— *with international search report (Art. 21(3))*