(12) INTERNATIONAL APPLICATION PUBLISHED UNDER THE PATENT COOPERATION TREATY (PCT)

(19) World Intellectual Property Organization
International Bureau

(43) International Publication Date
18 September 2003 (18.09.2003)

PCT

(10) International Publication Number
WO 03/076031 A1

(51) International Patent Classification[7]: A63C 17/02, 17/14

(21) International Application Number: PCT/NZ03/00044

(22) International Filing Date: 11 March 2003 (11.03.2003)

(25) Filing Language: English

(26) Publication Language: English

(30) Priority Data:
517724 11 March 2002 (11.03.2002) NZ

(71) Applicant and
(72) Inventor: REID, Reginald, Lyall [NZ/NZ]; 6 Fitzgerald Avenue, Matamata 2271 (NZ).

(74) Agents: SIMS, Anthony, W. et al.; Pipers Central, Level 5, KPMG Centre, 85 Alexandra Street, P.O. Box 19334, Hamilton 2001 (NZ).

(81) Designated States *(national)*: AE, AG, AL, AM, AT, AU, AZ, BA, BB, BG, BR, BY, BZ, CA, CH, CN, CO, CR, CU, CZ, DE, DK, DM, DZ, EC, EE, ES, FI, GB, GD, GE, GH, GM, HR, HU, ID, IL, IN, IS, JP, KE, KG, KP, KR, KZ, LC, LK, LR, LS, LT, LU, LV, MA, MD, MG, MK, MN, MW, MX, MZ, NI, NO, NZ, OM, PH, PL, PT, RO, RU, SC, SD, SE, SG, SK, SL, TJ, TM, TN, TR, TT, TZ, UA, UG, US, UZ, VC, VN, YU, ZA, ZM, ZW.

(84) Designated States *(regional)*: ARIPO patent (GH, GM, KE, LS, MW, MZ, SD, SL, SZ, TZ, UG, ZM, ZW), Eurasian patent (AM, AZ, BY, KG, KZ, MD, RU, TJ, TM), European patent (AT, BE, BG, CH, CY, CZ, DE, DK, EE, ES, FI, FR, GB, GR, HU, IE, IT, LU, MC, NL, PT, RO, SE, SI, SK, TR), OAPI patent (BF, BJ, CF, CG, CI, CM, GA, GN, GQ, GW, ML, MR, NE, SN, TD, TG).

Published:
— *with international search report*

For two-letter codes and other abbreviations, refer to the "Guidance Notes on Codes and Abbreviations" appearing at the beginning of each regular issue of the PCT Gazette.

(54) Title: PERSONAL CONVEYANCE FOR RECREATIONAL USE

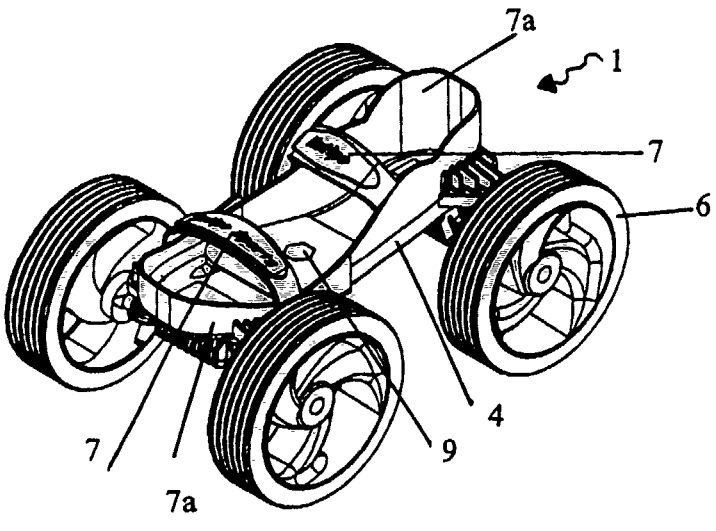

(57) Abstract: This invention relates to a personal conveyance (1) for recreational use. It includes a baseplate (4) having provision for attachment of at least two axle assemblies (5). The axle assemblies (5) are adapted to receive large diameter wheels (6) which extend above and perpendicular to the plane of the baseplate (4). The position and size of the wheels (6) contribute to improved overall stability, an improved ride over a variety of uneven surfaces, provide the potential for improved speed, provide ankle protection and yet afford the user with the ability to retain directional control. The invention may be in the form of roller skates, a skateboard, in-line skates or a scooter. It also includes steering and braking means (8). The personal conveyance (1) may also include a lowered centre of gravity which contributes to further improved stability and again lessens the likelihood for injury to the ankles of users.

WO 03/076031 A1

PERSONAL CONVEYANCE FOR RECREATIONAL USE

Technical Field

This invention relates to improvements in and relating to personal conveyance for recreational use.

In particular, the personal conveyance is an improved roller skate that may be used singularly, or as a pair. The roller skate is designed to have larger diameter wheels that extend above the sides and top surface of the roller skate base plate. The position and size of the wheels contribute to improved overall stability, an improved ride over a variety of uneven surfaces, provides the potential for improved speed and ankle protection, and yet affords the user with the ability to retain directional control of the skates.

The roller skate may also include a lowered and altered center of gravity from that found with traditional roller skates, in-line skates, scooters, skate boards, or other similar types of conveyances used recreationally, competitively, or for general transportation. The lower center of gravity contributes to the improved stability and again lessens the likelihood for injury to the ankles of users.

Whilst the invention herein described relates to an improved roller skate, the invention may however, have applications outside this field. For example, the principles of design and the performance aspects may be applied to a range of other conveyances including skate boards and scooters, for example, (but also is not limited to just those used for recreational use of which some have been mentioned above).

Background Art

A number of conveyances for recreational use are available in the market place and some of these have been described in the prior art. Some of these relate to traditional roller skate designs where the base plate (footplate) or truck of the roller skate operates as the foot

receiving portion of the skate and to which typically four wheels are attached to axles or similar. The wheels are typically small and are located beneath the base plate in a standard rectangular orientation pattern, where two wheels are positioned towards the front of the skate and two towards the back. Whilst the wheels are displaced towards the side edges of the base plate, portions of the wheels do not typically extend significantly laterally from the sides of the base plate, and if they do, there is typically no portion of the wheel that extends significantly above, or through, the top surface of the base plate, in a manner such that the user's shoe would be bordered by the wheels.

Alternatives to the traditional four wheeled roller skate include in-line skates where the wheels are located beneath the base plate and are aligned centrally along the horizontal longitudinal axis of the skate. New Zealand Patent No.145584 describes an example of a roller skate with a single row of wheels. This design limits any option for the wheels to extend from the sides of the base plate. Further, having large wheels that would extend above the base plate is not an option with this design.

Having larger wheels (or even tracks) extending from the sides of the base plate can provide a number of advantages which are not available with existing roller skate designs. For example, the larger wheels enable speed to be achieved more easily, for less effort. The larger wheels also enable the conveyance to be used over a range of ground surfaces, typically not available to users of roller skates with small wheels. Where the larger side wheels extend typically above the base plate to the vicinity of the ankles the wheels provide additional side support/protection for the user's ankles. In addition, where the larger side wheels extend laterally from the base plate, or even a portion of the wheels extends above the base plate, the stability of the overall conveyance is enhanced and in some designs, the centre of gravity can be effectively altered (such as lowered) to provide further improved stability of (and hence improve the safety of) the conveyance during use.

Some skates in the prior art may also include additional features, such as suspension systems, or systems for allowing a pair of the wheels (typically the front pair) to be independently operated to provide the user with varying degrees of directional control. The wheels may be attached to a pivotable plate, or a split axle, to allow for such control. For example, New

Zealand Patent No. 240943 relates to a roller skate truck having hemispherical elastomeric suspension mountings. Further, in New Zealand Patent No.181121 a steerable roller skate is described. The wheels are below the foot plate and are small, being typical of most roller skate designs. These features are directed to improve the control and operation of the skates, but not necessarily the safety or stability aspects.

Similar features as found in the various roller skate designs have also been applied (in various modified versions) to other conveyances, such as skate boards and scooters.

The design of skate boards has typically focused on improving the manoeuvrability and directional control of the skate board. For example, the invention of New Zealand Patent No.261599 relates to a wheeled conveyance similar to a skate board where the user stands on a pivotable plate that is connected to steerable front fork by cables.

Similarly, the invention of New Zealand Patent No.294782 is also a skate board which has its front wheels mounted to biased suspension arms that are pivoted to a supporting frame. The wheels are steered by a board roll linkage. This skate board design only includes three wheels of which the front ones are capable of being steered.

An alternative design is found in New Zealand Patent No. 251260 which relates to a skateboard where the wheels, whilst large and mounted outboard from the sides of the board, are displaced some distance lateral from the board and there are only three wheels. The board is also fitted on to a frame configuration .

Whilst there are some featural similarities between skates and the range of skateboards available, skateboards have very obvious differences because of the way the skateboards are used.

Many skateboards have wheels that are moderately small and located beneath the board and do not extend from the side of the board. Others may only have three wheels. Some four-wheeled skate boards may have large wheels and some may even have these wheels extend laterally from the sides of the boards. However, in such designs, the wheels are not typically

located directly adjacent the board so as to support a user's ankles, nor do they typically extend any significant distance above the board itself. To have such features may be considered by some to instead be more of a hindrance to the user of the skateboard as the wheels may be seen to impact on the users' ready ability to reposition their feet on the board. This is a consequence of the way a skateboard is ridden. Accordingly, a user typically stands at an angle on a skateboard (in a typical skate board fashion) and repositions the feet as required, rather than the feet remaining in the stance typically employed when using skates or a scooter.

Further, skateboards are not designed to be actually fitted to either or both feet and they are not designed to be used as a pair in the same manner as one would use skates.

Therefore, in designing an alternative to existing conveyances, consideration must be given to a range of issues, including mode of operation, desirability to secure the foot to the conveyance, stability, ease of use over a range of terrains, including uneven surfaces, consideration of where the centre of gravity is for balance/safety, speed requirements, manoeuvrability and so forth. Where the conveyance is an improved form of roller skate the positioning of the wheels and the weight of the skates will also determine the ability of a person to balance on and drive the skates.

It would therefore be advantageous to have an improved recreational conveyance that provided an alternative to traditional and/or existing roller skate design as well as providing an alternative to existing skate board, or even scooter, designs whilst at the same time provided improved speed, stability and safety and as such obviated at least some if not all of the disadvantages of the various prior art systems. Such an improvement may include:

a) Providing a conveyance that was able to be used singularly, or as a pair as required for either or both recreational and competitive use, or as a general transportation device.

b) Having wheels or other motive means of a diameter and form and/or an overall structure of the conveyance that allowed the conveyance to be serviceable for and used over a range of ground surfaces.

c) Providing a conveyance where the center of gravity was such (preferably lowered) as to provide greater stability to the user when using the conveyance, if required.

d) Providing a conveyance that afforded through its design, improved support and/or protection from injury to the user's ankles .

e) Being configured to improve the speed capabilities of the conveyance, but without including unnecessary incumbent additional weight, disadvantages to operational control/steering, reduced comfort or reduced safety when using the conveyance.

f) Providing a simple but effective option to the disadvantages of prior art systems.

It is an object of the present invention to at least address some of the foregoing problems or to at least provide the public with a useful choice or alternative system.

Further aspects and advantages of the present invention will become apparent from the ensuing description which is given by way of example only. It should be appreciated that variations to the described embodiments are possible and would fall within the scope of the present invention.

Disclosure of Invention

According to one aspect of the present invention, there is provided a personal conveyance for recreational use, the conveyance including:

at least one foot supporting member, the foot supporting member including, or including provision for attachment of,

at least two axle assemblies, said axle assemblies adapted to receive

rotational motion-facilitating means,

the personal conveyance characterised by the motion-facilitating means being positioned relative to the foot supporting member such that at least a portion of the motion–facilitating means extends in a vertical plane above and perpendicular to the foot supporting member in a manner whereby stability is effected of either or both the personal conveyance and a person standing thereon.

According to another aspect of the present invention, there is provided a personal conveyance for recreational use substantially as described above, wherein the motion-facilitating means being positioned relative to the foot supporting member such that at least a portion of the motion –facilitating means extends in a vertical plane above and perpendicular to the foot supporting member effects a change in the overall center of gravity of either or both the conveyance and a person standing thereon, for improved stability.

According to another aspect of the present invention, there is provided a personal conveyance for recreational use substantially as described above, wherein the personal conveyance is adapted to include steering means.

According to another aspect of the present invention, there is provided a personal conveyance for recreational use substantially as described above, wherein the personal conveyance is also adapted to include optional braking means.

According to another aspect of the present invention, there is provided a personal conveyance for recreational use substantially as described above, wherein the steering means includes pivoting means and resilience means manufactured such that the pivoting means is centrally positioned in relation to at least the axle assembly located towards the front leading end of the foot supporting member and is attachable to the foot supporting member.

According to another aspect of the present invention, there is provided a personal conveyance for recreational use substantially as described above, wherein the resilience means includes at least one pair of compressible springs positioned along the axle shaft at either or both the front leading end and the rear trailing end of the foot supporting member.

According to another aspect of the present invention there is provided a personal conveyance substantially as described above wherein the foot supporting member is adapted to receive a user's foot/shoe.

According to another aspect of the present invention there is provided a personal conveyance substantially as described above wherein the foot supporting member is adapted to include gripping means to grip or retain a user's foot/shoe in position on the foot supporting member.

According to another aspect of the present invention there is provided a personal conveyance substantially as described above wherein the gripping means includes either or both fixing apparata such as straps, screws and so forth, and configured portions to receive and hold the user's foot/shoe in place on the foot supporting member, whether the shoe is fixed permanently or temporarily to the foot supporting member.

According to another aspect of the present invention there is provided a personal conveyance substantially as described above wherein the at least two axle assemblies comprise at least two shafts each supporting at least one motion-facilitating means at each distal end of each shaft.

According to another aspect of the present invention there is provided a personal conveyance substantially as described above wherein each axle assembly comprises a shaft capable of independently supporting at least one motion-facilitating apparatus at an outer distal end of the shaft.

According to another aspect of the present invention there is provided a personal conveyance substantially as described above wherein the motion-facilitating apparatus, when attached to a distal end of an axle, extends beyond the sides of the foot supporting member.

According to another aspect of the present invention there is provided a personal conveyance substantially as described above wherein at least a portion of the motion-facilitating apparatus, when attached to a distal end of an axle, extends in a vertical plane above and perpendicular to the upper surface of the foot supporting member.

According to another aspect of the present invention there is provided a personal conveyance substantially as described above wherein the motion-facilitating apparatus may be attached to a distal end of the axle such that its centre of rotation is substantially positioned at any one of:

below the lower surface of the foot supporting member, in line with the horizontal plane of the foot supporting member, above the upper surface of the foot supporting member.

According to another aspect of the present invention there is provided a personal conveyance substantially as described above wherein the position of the motion-facilitating apparatus relative to the axle and the foot supporting member determines the preferred centre of gravity as determined for stability.

According to another aspect of the present invention there is provided a personal conveyance substantially as described above wherein the centre of gravity is lowered to effect preferred stability.

For ease of reference, the terms foot supporting member and motion-facilitating means shall now be referred to as the base plate and the wheels, respectively. However, it should be appreciated that use of these terms is not intended to limit the scope of the invention. For example, the motion-facilitating means may also include rotating tracks, rollers and may include substantially solid and or inflatable portions, spokes and bearing systems.

In preferred embodiments of the present invention, the base plate is preferably flat and substantially elongate, being dimensioned to receive and accommodate a user's foot or shoe, comfortably. However, it should be appreciated that whilst a preferably flat base plate allows greater options for accommodating a user's foot and/or shoe, the base plate may be contoured in overall shape to conform to the shape of a pre-existing shoe design for use specifically with the base plate, or may take any aesthetically pleasing or practical shape as required.

The upper surface of the base plate if flat may also, for example, be varyingly configured. Accordingly, the upper surface may be smooth, or include grooves or raised portions and so forth to improve the gripping nature, or traction of the surface. The configuration of the upper surface of the base plate is dependent upon whether the base plate is to accommodate a user's shoe, or be fitted with a pre-assembled shoe specifically designed for use with the base plate.

The base plate is preferably designed to be length adjustable so a single base plate can be adjusted for several shoe sizes (or elongated to adapt the conveyance as a scooter/skateboard).

The attachment or securing of the user's shoe or foot to the base plate may also be achieved by various gripping means designed or adapted for use with the conveyance. One example, of such gripping means may be employed include straps/ties that wrap around various portions of a foot, shoe or users' ankles. Also the use of flexible and/or adjustable straps aids the user in achieving a correct fit for their shoe size and shape on the base plate.

The straps may be arranged at any point along the length of the base plate, may be attached and extend from one side and be secured to the opposite side of the base plate, or two straps may alternatively be used and fixed/connected together at some point substantially central to the shoe, foot or base plate. In other embodiments, the straps may traverse the foot or shoe and hold it secure by downwards pressure exerted by the strap on the foot/shoe, or the straps may engage, be tied or otherwise affixed to the shoe or foot.

The straps may be secured in place on the base plate, to itself or another strap, or to the foot/shoe by appropriate means. For example, buckles, hook and pile systems, press studs, ties and so forth may be used. Safety release systems may also be included.

Other forms of gripping means used with, or adapted for use with, the conveyance may include screws, bolts, press studs and so forth to particularly affix a shoe to the base plate (whether the shoe is a pre-designed shoe specifically for use with the conveyance, or a user's existing shoe the user has chosen to adapt to be used on the base plate).

Use of such gripping means is preferable to ensure the foot or shoe is firmly held in place on the base plate. Minimising longitudinal or lateral movement of the users' feet or shoes on the base plate in turn contributes to improved safety for the user by minimising the likelihood of the foot/shoe becoming loose from the conveyance, minimises the likelihood of injury (particularly to ankles), improves the ability to manoeuvre the conveyance and improves the ability to initiate and maintain preferred operation of the conveyance, among other considerations.

In one embodiment, the lower surface of the base plate may include attachment means, or may be adapted to receive attachment means capable of engaging with the axles. In other embodiments where the axles may include short independent shafts that are attached to side edges of the base plate and the attachment means may also interact with either or both the upper and lower surfaces of the base plate.

In one preferred embodiment, the at least two axle assemblies may include two substantially elongate shafts. One axle in such an embodiment may be displaced towards the front leading end of the base plate. The second axle may preferably be displaced towards the rear trailing end of the base plate. The axles are preferably independent of each other, although in some embodiments the axles may be connected. In some embodiments, the front axle may be pivotally mounted to enable directional movement to be achieved.

Each axle also preferably extends transversely beneath the base plate. To each end of each axle is then attached at least one wheel. In yet other embodiments, the axles may include shorter independent axles, each dedicated to its own wheel. In further embodiments any combination of appropriate axle arrangements may be employed. The choice of axle arrangement will be dependent upon the size, number and location of the wheels, the desired use of the conveyance (merely recreational or for speed), the terrain over which the conveyance is designed to travel, and so forth.

In various embodiments, the axle may be integral with steering means for the conveyance, or the steering means may be separate but attachable to a portion of the base plate and/or axle.

For the purpose of this specification, the term axle shall mean and include any supporting member, beam, or shaft designed to carry a rotational motion-facilitating means such as a wheel, or wheel/track combinations or rollers (depending on the type of terrain over which the conveyance may be used). The wheel may be attached to it, driven by it, or freely mounted on it, depending on the movement and performance required from such rotational means.

The rotational motion-facilitating means, or wheels, of the present invention preferably include bearings for a smoother ride and improved wheel performance. The wheels may be

made of thermoplastics, rubber or any combination of these materials, with the inclusion of other materials as required for strength, durability, serviceability, and so forth. The materials used will also depend on effecting wheels having preferred weight to size ratios, the type of ground over which the conveyance will be used, the speeds the conveyance may be required to attain, and so forth.

Depending on the type of axle system existing off-the-shelf wheels may be used. Most recreational and fitness skates use wheels that when attached to the axle include a hollow spacer which extends to the outer edges of both bearings, when inserted in the wheel. Usually these spacers are plastic. The axle passes through the spacer. When removing these types of spacers in servicing the wheels/bearings of the wheels, it may be preferable to replace them with metal ones. The benefit of using metal spacers is that the wheels tend to spin better. Some skates have a spacer which is push fitted or may be threaded. Some fitness skates use an axle system which similar to that used on speed skates. These types use a floating spacer between the bearings, with a larger diameter axle aligning everything up.

Preferred embodiments include four large wheels arranged in a rectangular configuration, such that there are two wheels at the rear end of the base plate and two wheels towards the front leading end of the base plate. Large diameter wheels are preferred to improve the smooth ride effected by them, the speed which may be more easily reached for less effort, and because wider diameter wheels are required to effect other performance and safety criteria of the conveyance, as discussed below.

Larger diameter wheels are the key to allow users to use the conveyance on a variety of surfaces where smaller wheels prove disadvantageous. For example, the larger diameter wheels enable to conveyance – whether skates, scooter or skateboard, to be used on surfaces including broken concrete, over small pebbles/gravel and across typical residential lawns, or hard packed dirt. The larger diameter wheels along with other features designed into the conveyance during the development process have contributed to improved stability, turning, ease of use and a smooth ride.

Further, the width of the actual individual wheels/tires themselves and the circumferential surface are also preferably increased. This means that at any given time there is more wheel surface area in contact with the skating surface. Where the wheel is made from an electrometric material (i.e. rubber), there is a natural amount of compression produced when the user's weight is applied, thereby effecting even greater contact area or footprint of the wheel.

As a result of the conveyance preferably having a longer wheelbase and wider wheelbase, and by virtue of the wheels residing outside of the base plate, greater stationary and mobile stability is achieved.

This is compared with where large diameter wheels may be used in the same configuration as traditional skates (under the base plate) where it would result in the base platform being raised higher from the skating surface, which in turn raises the center of gravity and potentially makes the conveyance less stable.

Accordingly, the wheels preferably extend from the axles on opposite sides of the plate, rather than beneath the plate as with traditional roller skates. The wider diameter wheels lend themselves to this configuration, particularly where the conveyance is also required to have a preferred centre of gravity. Having the wheels extend laterally from the sides of the base plate enables greater variability in the height adjustment of the base plate and hence control over the centre of gravity, where this is required.

Where control over the centre of gravity required, the centre of gravity is preferably lowered. Having a lowered centre improves the stability of the conveyance for users. The lowered centre of gravity is determined to effect preferred stability, but without negatively impacting on the performance, manoeuvrability of, or the propulsion of the conveyance. The lack of stability encountered by users of existing skate design, contributes to the ease with which a user can so easily lose balance and fall over, effecting injury to many parts of the body in the process. Where balance can be improved and the risk of falling minimised, the overall safety is improved and this translates to the potential for greater enjoyment.

The conveyance may include provision for physical ankle protection. However, the 'stability' described above does provide a degree of resistance-improved safety to prevent skaters rolling over on their ankle. The wheels are preferably of a large diameter, such that when attached to the axle, at least a portion of the wheel extends in a vertical plane above the upper surface of the base plate. In preferred embodiments, the large wheels may sit adjacent to the sides of the base plate and thereby effectively enclose the user's ankles within the boundaries created by the wheels. This arrangement may serve as additional support and protection for the users' ankles. The larger wheels may minimise the likelihood of the conveyance tipping over on to its side, thereby making it less likely that the user may twist an ankle – which is a known likelihood with conventional skates. By effecting a design to minimise the likelihood of skates tipping sideways, this contributes to less ankle injury and an overall safer recreational conveyance.

On traditional skates a user might find that when skating in the road a curbstone could come in contact with the shoe or ankle. With the larger wheels of the present invention this would not be possible as the wheels would contact the curb first and stop any contact between the hard curb surface and the user's shoes or ankle. Another example would be if two friends were skating together and collided. The traditional skate would result in a possible injury by one user contacting the other's shoes or ankles. In the present invention, the larger wheels would come in contact first protecting the shoes or ankle area.

The larger wheels also tend to lower the rolling resistance experienced with smaller diameter wheels and as such enable speed to be achieved for much less effort. Where such conveyances are used competitively in speed trials, the larger wheeled conveyances have potentially realisable advantage. Less rolling resistance is encountered by each wheel because of the position of the central axis of rotation of each wheel in the present invention being such that the position of the central wheel bearing relative to the base plate is higher than is ever achievable in traditional roller skates, or other recreational conveyances such as scooters and skate boards.

Further, less rolling resistance combined with larger diameter and potentially wider wheels (in some embodiments) also enables the conveyance to be used more effectively on uneven

ground, grassed surfaces and gravelled surfaces where traditional roller skates, or those having wheels positioned beneath the base plate, or even those with small wheels have difficulty traversing. Combined with improved safety features commensurate with the design features as described, such conveyances are differentiated from those in the prior art.

In some embodiments however, the base plate may be widened and as such the wheels may be positioned lateral to the foot supporting part of the base plate, but still located within the external edges of the base plate. In such embodiments, the base plate may include apertures through which a portion of the wheel extends above the upper surface of the base plate. Again, even with this embodiment, the large wheels effectively enclose the user's ankles within the boundaries created by the wheels to serve as additional support and protection for the users' ankles.

Whilst preferred embodiments include one wheel per outer distal end of each axle, tandem wheels may be an option in some embodiments whether in relation to either or both the front and back wheels.

In some embodiments of the present invention there may also be optionally included a braking means. Such braking means may include any suitable means capable of being employed with, or adapted for use with, the invention For example, it may include a substantially resilient stop which is deployed against the ground surface by tipping the base plate downwards.

Such systems are known in the prior art and are typically attached to the base plate, at either the front or the rear of the plate in a similar manner to that found with conventional roller blades/skates. The stop may be made of rubber, hard thermoplastics materials or any other suitable material.

In preferred embodiments, the invention can be used as a pair – in the same manner as skates, or as a single unit – in the same manner as a scooter (without the handle) or a skate board (although without the side-tilting feature of a skateboard).

In yet other embodiments, a removable handle may be provided that may be attached to a portion of the base plate as required or permanently, thereby converting the conveyance from a roller skate to a modified scooter. The handle may be attached via a screw thread, bayonet, push-fit or pinned system. The handle may be telescopic to be adjustable in height or of a fixed length. Locking means may be employed to lock the handle in position on the base plate and/or to lock the height of a handle portion after adjustment. The handle may include hand grips which may in turn be adjustable in width.

Further, provision for attachment of the handle may be included in a base plate designed to accommodate a right or a left foot – to enable the modified skate to be used as a scooter by people having either left or right dependent tendencies. In other embodiments, the base plate may be of a universal shape, capable of accommodating either a left or right foot, thereby more appropriately predisposing the conveyance to use either singularly or as a pair. The length of the base plate may be adjusted as previously described to provide additional space for a user's foot or shoe.

A rear footplate may also be included to enable the free foot to be rested when not being used to propel the scooter (or skateboard) forward.

In yet other embodiments, particularly those where the base plate may be widened and/or in embodiments where the wheels project through apertures in the base plate, the placement of the wheels and the extent of projection of the wheels above the base plate may be adjusted to enable a single conveyance to be also used in a manner similar to that of a skateboard (or again a scooter). In such embodiments, pivoting axle mounts and/or suspension systems may be added to effect the versatility of manoeuvrability and directional control required from a skateboard-type conveyance.

The steering means of the present invention preferably includes double compression springs located towards the front leading end and rear trailing end of the base plate. When compared with traditional 'truck' systems currently used for skates and skate boards, the present invention provides a more rigid, but positive, smooth transfer of weight for changing direction. In addition, traditional truck systems tend to take up space beneath the base plate. In

circumstances where the base plate is preferably lowered to effect a lower center of gravity, the truck system would be a hindrance.

In addition, traditional skates use elastomeric material boots around the axle bolt of the truck , this compresses when the skate turns. It has been observed that this elastromeric material does not return to its normal size fast enough to provide a smooth transfer from one turn to the next. The double spring system of the present invention provides an almost instant return back to the normal plane.

Further, the traditional truck has a single centered pivot point. Accordingly, when weight is transferred a sudden movement can result. Whilst a central pivot point is also included in the present invention, the springs located on each side of the base plate front and back provides a more controlled weight transfer by way of a "push-pull" motion that offers a degree of resistance. Improvements in the spring system to enable tension and pulling actions are also envisaged.

In preferred embodiments of the present invention the steering system also includes a pivotable hinge point. In one preferred embodiments the pivotable hinge point is moulded as an integral part of the footplate. This provides a hinging point for the steering system to provide lateral motion when transferring weight to initiate a turn. However, in other embodiments, the pivoting point does not have to be molded onto the base plate. This compares to a normal quad style skate system which simply bolts a traditional truck system to the base of the footplate.

The steering means of the present invention accordingly provides the conveyance with a suspension turning system.

As can be appreciated, modifications to the design could provide a system similar to traditional trucks which bolt onto sandshoes or boots. In addition, the invention may be presented as a finished skate whereby a user's footwear can be strapped into as opposed to a shoe being providing with the conveyance as part of the design. However, the base plate

technology may also be available to add a specifically configured upper/boot design from an existing manufacturer of skating boots and the like.

As can be appreciated variations to and from the above described embodiments may be made without deviating from the scope of the present invention.

Brief Description of Drawings

Further aspects of the present invention will become apparent from the following description, given by way of example only and with reference to the accompanying drawings in which:

Figure 1 is a top perspective view of the conveyance of the present invention in accordance with one embodiment of the present where the configuration is such as to lower the center of gravity of the conveyance and user thereon; and

Figure 2 is a top plan view of the conveyance Figure 1 in accordance with one embodiment of the present invention; and

Figure 3 is a front diagrammatic perspective view of a person using the conveyance of Figure 1; and

Figure 4 is a side view of a person using the conveyance of Figure 1; and

Figure 5 is an enlarged front diagrammatic perspective view of a person using the conveyance of Figure 1; and

Figure 6 is a enlarged side view of a person using the conveyance of Figure 1; and

Figure 7 is a front view of the conveyance in accordance with one embodiment of the present invention; and

Figure 8 is an enlarged rear diagrammatic view of a person using the conveyance of Figure 1; and

Figure 9 is a top perspective view of a shoe positioned on the base plate of the conveyance in accordance with another embodiment of the present invention; and

Figure 10 is a bottom perspective view of the base plate of the conveyance of Figure 9; and

Figure 11 is a top perspective view of the base plate of the conveyance of Figure 9; and

Figure 12 is a top perspective view of the conveyance of the present invention in accordance with a preferred embodiment of the present wherein the configuration is such as to improve the stability of the conveyance and a user thereon; and

Figure 13 is a bottom perspective view of the conveyance of Figure 12; and

Figure 14 is a front diagrammatic view of the conveyance of Figure 12; and

Figure 15 is a side view of the conveyance of Figure 12; and

Figure 16 is rear diagrammatic view of the conveyance of Figure 12; and

Figure 17 is a enlarged top plan view of the conveyance of Figure 12; and

Figure 18 is a longitudinal cross-sectional view at "A-A" of the conveyance in accordance with a preferred embodiment of the present invention and includes enlarged portion "B"; and

Figure 19a, b are enlarged rear diagrammatic views of the conveyance of Figure 12 from perspective "C-C" and "E-E" during a turning manoeuvre; and

Figure 20 is a cross-sectional view of the axle assembly of the conveyance in accordance with a preferred embodiment of the present invention; and

Figure 21 is a top perspective view of the axle assembly of Figure 20, and

Figure 22 is a bottom perspective view of the axle assembly of Figure 20; and

Figures 23a,b are diagrammatic side views of the conveyance of Figure 12 adapted as a scooter.

Best Modes for Carrying Out the Invention

With reference to the diagrams (Figures 1 to 22) by way of example only, there is provided personal conveyance apparatus (generally indicated by arrow (1)) for recreational use by individuals (2). Whilst the emphasis is on recreational use, the conveyance may be used competitively, in speed events and/or as a general transport means.

The conveyance as described herein is described with reference to an improved roller skate design. However, the design features and performance characteristics of the conveyance means it is able to be applied as a scooter, a skate board and so forth.

The conveyance (1) as shown in Figures 1, 2, 7, 9, 10, 12-17, and 19 particularly, includes at least one foot supporting member, or base plate (4). The base plate is preferably flat and substantially elongate. In Figures 3-6, 8, 9, and 12-17 the base plate is adapted to receive a user's foot/shoe (3), being dimensioned to receive and accommodate a user's foot or shoe, comfortably.

The base plate may be of a universal shape, capable of accommodating either a left or right foot, thereby more appropriately predisposing the conveyance to use either singularly or as a pair. Alternatively, as in Figures 12-17 the base plate (4) may be shaped such that one of a pair is dedicated for use with the user's right foot and the other for use with the user's left foot. Further, the base plate may be contoured in overall shape to conform to the shape of a pre-existing shoe design manufactured for use specifically with the base plate, or may take any aesthetically pleasing or practical shape as required.

In the embodiment illustrated by Figures 12 and 13 provision is included for adjustment of the length of the base plate, to accommodate varying shoe or foot sizes. The adjustment means 9 is in the form of sliding plate portions of the base plate which are tightened to secure the preferred adjustment via a screw lug or pin system.

Gripping means in the form of straps (7) shown in Figures 9, 12, and 14-17, for example, are included to grip or retain a user's foot/shoe in position on the foot supporting member. Use of such gripping means is preferable to ensure the foot or shoe is firmly held in place on the base plate to minimise longitudinal or lateral movement of the users' feet or shoes and the likelihood of the foot/shoe becoming loose from the conveyance. This in turn minimises the likelihood of injury (particularly to ankles), improves the ability to manoeuvre the conveyance and improves the ability to initiate and maintain preferred operation of the conveyance, among other considerations.

Although any arrangement of straps, screws, configured portions raised protrusions, and configuration 7a of the base plate and so forth may also be included (as shown in the Figures 12-16), to receive and hold the user's foot/shoe in place on the base plate (4), whether the shoe is fixed permanently or temporarily to the foot supporting member.

The foot supporting member/base plate (4) includes, or includes provision for attachment of, at least two axle assemblies (5) adapted to receive rotational motion-facilitating means or wheels (6). As shown in Figures 1, 3, 5-9 the personal conveyance is characterised by the motion-facilitating means/wheels (6) being positioned relative to the base plate (4) such that at least a portion of the wheels extends in a vertical plane above and perpendicular to the horizontal plane of the base plate (4). In the embodiments of Figures 1-9 the arrangement of the wheels is in a manner whereby the overall center of gravity of either or both the conveyance and a person standing thereon, is lowered (as shown in Figures 1 and 5 particularly), to effect improved stability. In the embodiment of Figures 12-21 the arrangement of the wheels contributes to improved stability without the need to lower the center of gravity of the base plate.

One embodiment of the personal conveyance (as shown in Figures 9-21) includes at least two axle assemblies (5) which comprise two shafts (5b) each supporting at least one wheel (6) at each distal end of each shaft (5). Each axle extends transversely beneath the base plate. One axle in such an embodiment is displaced towards the front leading end of the base plate. The second axle is displaced towards the rear trailing end of the base plate. The axles are preferably independent of each other, although in some embodiments the axles may be connected. In some embodiments, as illustrated in Figures 12-21 the front axle is pivotally mounted to enable directional movement to be achieved.

In another embodiment of the personal conveyance (as shown in Figures 1-8) each axle assembly (5) comprises a shaft capable of independently supporting at least one wheel (6) at the outer distal end of the shaft. The axle includes a stepped portion and operates in this configuration to contribute to lowering the centre of gravity of the conveyance. The choice of axle arrangement will be dependent upon the size, number and location of the wheels, the desired use of the conveyance (merely recreational or for speed), the terrain over which the conveyance is designed to travel, and so forth.

In the embodiments illustrated in the Figures, the wheels (6) when attached to a distal end of an axle, extend beyond the sides of the foot supporting member.

The wheels (6) of the personal conveyance in the varying embodiments of Figures 9 to11 and 12-21 are attached to a distal end of the axle such that its centre of rotation is substantially positioned in line with the horizontal plane of the base plate (4). Whereas the wheels (6) of the personal conveyance in Figures 1 to 8 are attached to a distal end of the axle such that its centre of rotation is substantially positioned above the upper surface of the base plate (4). As can be seen in Figures 1 to 11, the position of the wheels (6) relative to the axle (5) and the base plate (4) determines the preferred centre of gravity as determined for stability. In these latter figures 1-11, the centre of gravity is lowered to effect preferred stability.

The embodiments illustrated include four large wheels (6) arranged in a rectangular configuration, such that there are two wheels at the rear end of the base plate and two wheels towards the front leading end of the base plate. Large diameter wheels are preferred to improve the smooth ride effected by them, the speed which may be more easily reached for less effort, and because wider diameter wheels are required to effect other performance and safety criteria of the conveyance. In addition the circumferential surface of the wheels is an additional benefit in increasing the contact between the wheels and the surface on which the conveyance is being used. The larger diameter and greater width of the wheels enable use of the conveyance over broken concrete, gravel or pebbles and over grass.

The wheels (6) extend from the axles on opposite sides of the plate, rather than beneath the plate as with traditional roller skates. The wider diameter wheels lend themselves to this configuration, particularly where the conveyance is also required to have a preferred centre of gravity. Having the wheels extend laterally from the sides of the base plate enables greater variability in the height adjustment of the base plate and hence control over the centre of gravity. Accordingly, for example, the centre of gravity in embodiments illustrated by Figures 1-8 will be lower than the centre of gravity in the embodiments represented by Figures 9-11 and 12-21, respectively. However, these embodiments and any other variations using the same concept are typically more stable than the traditional roller skates where the wheels are below the base plate, or substantially below the base plate.

The wheels (6) are preferably of a large diameter, such that when attached to the axle (5), at least a portion of the wheel (6) extends in a vertical plane above the upper surface of the base

plate (4). In Figures 1 to 11, the large wheels (6) sit adjacent the sides of the base plate (4) and thereby effectively enclose the user's ankles within the boundaries created by the wheels (as shown in Figures 3-6, 8). This arrangement acts as additional support and protection for the users' ankles.

In some embodiments (not shown) however, the base plate (4) may be widened and as such the wheels may be positioned lateral to the foot supporting part of the base plate, but still located within the external edges of the base plate and the base plate may include apertures through which a portion of the wheel extends above the upper surface of the base plate. Again, even with this embodiment, the large wheels effectively enclose the user's ankles within the boundaries created by the wheels to serve as additional support and protection for the users' ankles. Whilst the illustrated embodiments include one wheel (6) per outer distal end of each axle (5), tandem wheels (not shown) may be an option in some embodiments whether in relation to either or both the front and back wheels (6).

The embodiments as illustrated in Figures 9-11 and Figures 13-18 include a braking means (8). Such braking means may include any suitable means capable of being employed with, or adapted for use with, the invention. For example, in the illustrated embodiment the braking means (8) is a resilient stop which is deployed against the ground surface by tipping the base plate (4) downwards.

The steering means (10) of a preferred embodiment illustrated by Figures 12-22 includes two pairs of compression springs (11). One pair located towards the front leading end is optionally a lighter spring than the second pair located at the rear trailing end of the base plate. The axle assembly (5) as shown in Figures 20-22 is adapted to receive the springs on an appropriately configured lug (13).

The steering system also includes a pivotable hinge point (12). In one preferred embodiments the pivotable hinge point includes a moulded portion (12a) which is an integral part of the footplate as shown in Figure 18. This provides a hinging point against a portion (12b) of the axle assembly for the steering system to provide lateral motion when transferring weight to initiate a turn as illustrated in Figures 19a and 19b. A pin in the form of a nut (15) and bolt

(14) arrangement may be used to secure the axle assemblies (5) to the base plate (4). The steering means of the present invention accordingly provides the conveyance with a suspension turning system. The user standing on said foot supporting member effects a shift in the position of applied body weight on the foot supporting member, which effects compression of at least one front and/or one rear spring resulting in pivoting of the pivoting means and the axle assembly causing a turning of the motion facilitating means and a directional change of the personal conveyance. The optional braking means slows down or completes the steering by deployment of the stop against the ground surface by tipping the rear or front of the foot supporting member downwards.

As can be appreciated, the invention can be used as a pair in the same manner as skates, or as a single unit, in the same manner as a scooter or a skateboard. A removable or fixed handle 16 may be provided. The handle may be attached to an appropriately configured portion of the base plate via a screw thread, bayonet, push-fit, or pinned/bolted system, thereby converting the conveyance from a roller skate to a modified scooter as illustrated in part in Figures 23 a,b. The base plate may be lengthened by adjustment as previously discussed to provide more room for the user to position the foot. A rear footplate (17) for supporting the free foot may also be included, which may be removable, fixed in position, or hinged for folding down.

It should also be understood that the term "comprise" where used herein is not to be considered to be used in a limiting sense. Accordingly, 'comprise' does not represent nor define an exclusive set of items, but includes the possibility of other components and items being added to the list. This specification is also based on the understanding of the inventor regarding the prior art. The prior art description should not be regarded as being an authoritative disclosure of the true state of the prior art but rather as referring to considerations in and brought to the mind and attention of the inventor when developing this invention.

Aspects of the present invention have been described by way of example only and it should be appreciated that modifications and additions may be made thereto without departing from the scope thereof, as defined in the appended claims.

THE CLAIMS DEFlNlNG THE INVENTION ARE:

1. A personal conveyance for recreational use, the conveyance including:

at least one foot supporting member, the foot supporting member including a front leading end and a rear trailing end, and also including, or including provision for attachment of,

two axle assemblies, one front axle assembly being positioned towards the front leading end of and arranged transverse to the longitudinal axis of the foot supporting member and a rear axle assembly being positioned adjacent the rear trailing end of and a preferred distance from the rear trailing end of the foot supporting member and transverse to the longitudinal axis of the foot supporting member, each axle assembly including at least one axle shaft adapted at its outer distal end(s) to engage with

at least one ground contacting rotational motion-facilitating means, such that there is at least one ground contacting rotational motion-facilitating means adjacent to each side of both the front leading end and the rear trailing end of the foot supporting member, each motion-facilitating means of a diameter such that it extends in a vertical plane above and perpendicular to the horizontal plane of the foot supporting member, thereby bordering the foot or shoe of the user positioned on the foot supporting member and enabling a raised central axis of rotation of the motion-facilitating means, and each motion-facilitating means in a position and of a width such that the personal conveyance has a rotational motion facilitating wheelbase of a length and width respectively, adapted to the weight of the user, thereby providing improved stability of either or both the personal conveyance and a person standing thereon.

2. A personal conveyance for recreational use as claimed in Claim 1 wherein the motion-facilitating means are further adapted in respect of the diameter, width and position of the motion-facilitating means relative to either or both the length and width of the foot supporting member to effect improved weight dispersion on and contact between the motion-facilitating means and the surface on which the

personal conveyance is used and a lowered centre of gravity, for improved stability of either or both the personal conveyance and a person standing thereon.

3. A personal conveyance for recreational use as claimed in Claim 1 and Claim 2 wherein the personal conveyance is adapted to include steering means.

4. A personal conveyance for recreational use as claimed in Claim 3 wherein the personal conveyance is also adapted to include optional braking means.

5. A personal conveyance for recreational use as claimed in Claim 2 wherein the center of gravity of either or both the personal conveyance and a person standing thereon is determined by at least one of:
   a) the dimensions of the motion-facilitating means;
   b) the dimensions of the foot supporting member;
   c) the location of the axle assemblies relative to the length of the foot supporting member;
   d) the position of either or both the axle assemblies and the foot supporting member relative to the motion-facilitating means.

6. A personal conveyance for recreational use as claimed in Claims 2 to 5 wherein stability of either or both the conveyance and a person standing thereon is further effected by at least one of:
   a) operation of the steering means;
   b) operation of the breaking means.

7. A personal conveyance as claimed in Claim 5 wherein the foot supporting member is dimensioned to be substantially rectangular being adapted to maintain a foot or shoe in position thereon.

8. A personal conveyance as claimed in Claim 5 wherein the dimensions of the foot supporting member are adjustable via adjustment means.

9. A personal conveyance as claimed in Claim 8 wherein the adjustment means to adjust the dimensions of the foot supporting member includes provision to extend the length of the foot supporting member by longitudinal movement of portions of the foot supporting member via at least one of a screw system, a ratchet system, a sliding system each of which is securable following the adjustment.

10. A personal conveyance as claimed in Claim 9 wherein the dimensions of the foot supporting member are adjustable to accommodate either or both variations in the sizes of users' feet or shoes and custom-made footwear of varying sizes specifically manufactured for use with the personal conveyance.

11. A personal conveyance as claimed in Claim 10 wherein the foot supporting member is also adapted to include gripping means.

12. A personal conveyance as claimed in Claim 11 wherein the gripping means effects at least one of:

a) minimising longitudinal and/or lateral movement of the users' foot or shoe;
b) gripping a custom-made manufactured shoe specifically included on or attachable to the foot supporting member;
c) re-positioning of the user's foot or shoe;
d) ensuring a correct fit for the user's foot or shoe size and shape;

on the foot supporting member.

13. A personal conveyance as claimed in Claim 12 wherein the gripping means further effects at least one of:

a) improved manoeuvrability of the conveyance,
b) the ability to initiate and maintain preferred operation of the conveyance,
c) the safety for the user by minimising the likelihood of the foot/shoe becoming loose from the conveyance,
d) minimising the likelihood of injury, particularly to the user's ankles.

14. A personal conveyance as claimed in Claim 13 wherein the gripping means includes either or both:

a) fixing apparata including straps, screws, buckles, hook and pile systems, press studs, ties, bolts, with or without safety release systems; and

b) configured portions of a gripping nature including portions on the surface of the foot supporting member to receive and hold a foot or shoe in place on the foot supporting member, or improve traction of the surface of the foot supporting member, with or without safety release systems

whether the shoe is attached permanently or temporarily to the foot supporting member.

15. A personal conveyance as claimed in Claim 1 wherein each axle shaft independently supports motion-facilitating means at the outer distal end(s) of the axle shaft.

16. A personal conveyance as claimed in Claim 15 wherein the shaft of each axle assembly is configured to be any one of:

a) a substantially straight elongated shaft;

b) a substantially elongated shaft having stepped portions at at least each outer distal end;

c) at least two shorter independent shafts each one being located towards opposite side edges of the foot supporting member;

d) attachable along at least a portion of its length to either or both the foot supporting member and the steering means;

e) integral along at least a portion of its length with either or both the foot supporting member and the steering means.

17. A personal conveyance as claimed in Claim 16 wherein the shaft of each axle assembly are:

a) independent of each other,

b) interconnected,

c) pivotally mounted towards at least the front leading end of the foot supporting member to enable directional movement to be achieved.

18. A personal conveyance as claimed in Claim 17 wherein a combination of axle assembly arrangements may be employed dependent upon:
    a) the size, number and location of the motion-facilitating means;
    b) the proposed use of the conveyance including recreational, extreme sport, speed, skills;
    c) the terrain over which the personal conveyance is designed to travel.

19. A personal conveyance as claimed in Claim 15 wherein the axle shaft optionally includes a hollow spacer along its length, said spacer extending to outer edges of bearings of motion-facilitating means when inserted in the motion-facilitating means, said spacer optionally being fixed via push-fitted, threaded, or floating between the bearings, with a larger diameter axle shaft dimensioned for aligning the shaft, spacer and motion-facilitating means.

20. A personal conveyance as claimed in Claim 19 wherein the motion-facilitating means, when attached to an outer distal end of an axle shaft, extends laterally of the foot supporting member.

21. A personal conveyance as claimed in Claim 20 wherein at least a portion of the motion-facilitating means, when attached to an outer distal end of an axle shaft, extends in a vertical plane above and perpendicular to the horizontal plane of the upper surface of the foot supporting member.

22. A personal conveyance as claimed in Claim 21 wherein the motion-facilitating means is attached to a distal end of the axle such that the centre of rotation of the motion-facilitating means is substantially positioned at any one of:
    a) below the lower surface of the foot supporting member;
    b) in line with the horizontal plane of the foot supporting member;

c) above the upper surface of the foot supporting member

to effect a preferred centre of gravity of both the personal conveyance and a person thereon.

23. A personal conveyance as claimed in claim 22 wherein the configuration of the personal conveyance is variable to effect preferred variations in the centre of gravity of the personal conveyance variable as determined by the use for which the personal conveyance is designed.

24. A personal conveyance as claimed in Claim 23 in which the centre of gravity is lowered to effect a preferred stability.

25. A personal conveyance as claimed in Claim 22 wherein the motion-facilitating means include wheels, rotating tracks, rollers.

26. A personal conveyance as claimed in Claim 25 wherein the motion-facilitating means are configured to optionally include any of an inflatable portion, substantially solid portion, varying spoke arrangements, bearings for a smoother ride and improved motion-facilitating means performance.

27. A personal conveyance as claimed in Claim 26 wherein the motion-facilitating means are configured to include at least one from the list of:

a) a radius of up to or greater than twice the distance between the underside of the foot supporting member and the surface on which the personal conveyance is standing;

b) a width of the motion-facilitating means:weight of user ratio to effect a preferred weight distribution and improved balance of the personal conveyance and a user thereon.

28. A personal conveyance as claimed in Claim 27 wherein the motion-facilitating means are configured to have a radius of up to or greater than twice the distance between the underside of the foot supporting member and the surface on which the personal conveyance is standing, to effect at least one of:

a) a lower centre of gravity of the foot supporting member;

b) a higher central axis of rotation of the motion-facilitating means;

c) ensuring at least a portion of the motion-facilitating means extends in a vertical plane above and perpendicular to the foot supporting member,

in a manner whereby either or both stationary and mobile stability is effected of the personal conveyance and/or a person standing thereon.

29. A personal conveyance as claimed in Claim 27 wherein the motion-facilitating means are configured to be wide to effect at least one of:

a) greater surface area contact between the motion-facilitating means and the surface on which the personal conveyance is standing;

b) resistance to sideways tipping;

c) a smoother ride through accommodation of varying surface imperfections

all of which are not so easily achieved with thinner motion-facilitating means.

30. A personal conveyance as claimed in Claim 27 wherein the motion-facilitating means are configured to either or both complement the type of ground over which the conveyance will be used and be designed to effect the speeds the conveyance may be required to attain.

31. A personal conveyance as claimed in Claim 30 in which there is a minimum of four motion-facilitating means per personal conveyance, being one on either side of the rear trailing end and of the front leading end of the foot supporting member.

32. A personal conveyance as claimed in Claim 31 in which tandem motion-facilitating means are optionally included in relation to either or both the front and rear ends of the fact supporting member.

33. A personal conveyance as claimed in Claim 21 wherein the distance the motion-facilitating means are configured to extend in a vertical plane above and perpendicular to the horizontal plane of the upper surface of the foot supporting member, is commensurate with that required to enable the motion-facilitating means to function to:

a) protect the user's ankles from contact with adjacent conveyance and/or other obstacles; and

b) support the user's ankles against twisting by improving the stability of the conveyance against tipping over on to its side,

said stability arising from the higher central axis of rotation of the motion-facilitating means and the lowered centre of gravity of the personal conveyance and a person standing thereon.

34. A personal conveyance as claimed in Claim 33 wherein the motion-facilitating means are configured to have a radius of up to or greater than twice the distance between the underside of the foot supporting member and the surface on which the personal conveyance is standing to lower the rolling resistance experienced with smaller diameter motion-facilitating means, thereby enabling increased speed to be achieved for much less effort.

35. A personal conveyance as claimed in Claim 24 wherein when the centre of gravity is lowered, less rolling resistance is encountered by each motion-facilitating means because the position of the central axis of rotation of each motion-facilitating means is such that the position of the centre of rotation of the motion-facilitating means relative to the foot supporting member is raised.

36. A personal conveyance as claimed in any one of Claims 34 or 35 wherein less rolling resistance due to the larger diameter motion-facilitating means and greater contact between motion-facilitating means and the surface due to the wider

motion-facilitating means enables the personal conveyance to be used more effectively on uneven ground, grassed surfaces and gravelled surfaces.

37. A personal conveyance as claimed in Claim 7 wherein the dimensions of the foot supporting member are optionally variable in relation to the width of the foot supporting member.

38. A personal conveyance as claimed in Claim 37 wherein where the foot supporting member is widened at least some of the motion-facilitating means are positionable within the external edges of the base plate via apertures through which a portion of the motion-facilitating means extends above the upper surface of the foot supporting means.

39. A personal conveyance for recreational use as claimed in Claim 4 wherein the optional braking means includes a stop which is deployed against the ground surface by tipping the rear or front end of the foot supporting member downwards.

40. A personal conveyance for recreational use as claimed in Claim 3 wherein the steering means includes pivoting means and resilience means.

41. A personal conveyance for recreational use as claimed in Claim 40 wherein the pivoting means is centrally positioned in relation to at least the axle assembly located towards the front leading end of the foot supporting member.

42. A personal conveyance for recreational use as claimed in Claim 41 wherein at least a portion of the pivoting means is integrally moulded with the axle assembly and is attachable to the foot supporting member via attachment means, including pins, nut and bolts, screws, bracket means.

43. A personal conveyance for recreational use as claimed in Claim 40 wherein the resilience means includes at least one pair of compressible springs positioned

along the axle shaft at either or both the front leading end and the rear trailing end of the foot supporting member.

44. A personal conveyance for recreational use as claimed in Claim 43 wherein the springs at the front leading end of the foot supporting member are optionally lighter than the springs at the rear trailing end of the foot supporting member.

45. A personal conveyance for recreational use as claimed in Claims 42 and 44 wherein the steering means is operable to effect steering via the user shifting body weight and effecting compression of at least one front and/or one rear spring on the side of the personal conveyance equating to the desired turning direction, to effect central pivoting of the pivoting means and the axle resulting in turning of the motion facilitating means and a directional change of the personal conveyance.

46. A personal conveyance for recreational use as claimed in Claim 1 wherein the personal conveyance is operable as:

a) a pair, in the same manner as skates;

b) as a single unit, in a similar manner to a skate board;

c) as a single unit, in a similar manner as a scooter.

47. A personal conveyance for recreational use as claimed in Claim 46 wherein where the personal conveyance is operable as a skateboard or a scooter the steering means optionally includes pivoting axle mounts and/or additional suspension systems adapted to effect the versatility of manoeuvrability and directional control preferred for a skateboard or scooter.

48. A personal conveyance for recreational use as claimed in Claim 47 wherein where the personal conveyance is operable as either a scooter or a skateboard, provision is included in the foot supporting member for attachment of either or both a handle portion capable of effecting steering of the personal conveyance and a rear foot plate to support the free foot of the user.

49. A method of manufacturing a personal conveyance for recreational use, said personal conveyance including at least one foot supporting member, the foot supporting member including or including provision for attachment of at least two axle assemblies, said axle assemblies adapted to receive rotational motion-facilitating means, said method including the steps of:

a) manufacturing at least one foot supporting member, the foot supporting member having preferred dimensions including a front leading end and a rear trailing end, and also including, or including provision for attachment of

b) two axle assemblies, one front axle assembly being positioned towards the front leading end of and arranged transverse to the longitudinal axis of the foot supporting member and a rear axle assembly positioned adjacent the rear trailing end of and transverse to the longitudinal axis of the foot support member, each axle assembly including at least one axle shaft adapted at its outer distal end(s) to engage with

c) at least one ground contacting rotational motion-facilitating means, such that there is at least one ground contacting rotational motion-facilitating means adjacent to each side of both the front leading end and the rear trailing end of the foot supporting member,

d) each of said motion-facilitating means being manufactured to be of a diameter such that it extends in a vertical plane above and perpendicular to the horizontal plane of the foot supporting member, thereby bordering the foot or shoe of the user positioned on the foot supporting member and enabling a raised central axis of rotation of the motion-facilitating means, and each motion-facilitating means being located in a position and of a width such that the personal conveyance has a rotational motion-facilitating wheelbase of a length and width respectively, adapted to the weight of the user,

the method characterized by the diameter, width and position of the motion-facilitating means relative to the foot supporting member thereby providing

improved stability of either or both the personal conveyance and a person standing thereon.

50. A method of manufacturing a personal conveyance as claimed in Claim 49 wherein the personal conveyance is adapted to include steering means and optional braking means.

51. A method of manufacturing a personal conveyance as claimed in Claim 50 wherein the steering means includes pivoting means and resilience means manufactured such that the pivoting means is centrally positioned in relation to at least the axle assembly located towards the front leading end of the foot supporting member and is attachable to the foot supporting member.

52. A method of manufacturing a personal conveyance as claimed in Claim 51 wherein the resilience means includes at least one pair of compressible springs positioned along the axle shaft at either or both the front leading end and the rear trailing end of the foot supporting member.

53. A method of manufacturing a personal conveyance as claimed in Claim 50 wherein the optional braking means comprises a stop which is deployed against the ground surface by tipping the rear or front of the foot supporting member downwards.

54. A method of adapting a personal conveyance for a range of recreational uses, said personal conveyance including at least one foot supporting member, the foot supporting member including, or including provision for attachment of, at least two axle assemblies, said axle assemblies adapted to receive rotational motion-facilitating means, and said method including the steps of:

a) adjusting at least one foot supporting member to effect preferred dimensions via adjustment means, the foot supporting member including, or including provision for attachment of,

b) at least two axle assemblies, one front axle assembly being positioned towards the front leading end of and arranged transverse to the longitudinal axis of the foot supporting member and a rear axle assembly being positioned adjacent to and a preferred distance from the rear trailing end of the foot supporting member and transverse to the longitudinal axis of the foot supporting member, each axle assembly including at least one axle shaft adapted at its outer distal end(s) to engage with

c) ground contacting rotational motion-facilitating means having preferred diameter and width, and

d) said axle assemblies further adapted to optionally include steering means,

e) said adapted personal conveyance also optionally including one or more of handle means, breaking means, a rear footplate

the method characterized by the motion-facilitating means of the personal conveyance having a diameter, width and position relative to the foot supporting member such that they extend in a vertical plane above and perpendicular to the horizontal plane of the foot supporting member thereby bordering the foot or shoe of the user positioned on the foot supporting member and enabling a raised central axis of rotation of the motion-facilitating means, and providing a rotational motion-facilitating wheelbase of a length and width adapted to the weight of the user, thereby providing improved stability of either or both the personal conveyance and a person standing thereon.

55. A method of adapting a personal conveyance for a range of recreational uses as claimed in Claim 54 wherein the personal conveyance is adapted to further include steering means and optional braking means.

56. A method of adapting a personal conveyance for a range of recreational uses as claimed in Claim 55 wherein the steering means includes pivoting means and resilience means manufactured such that the pivoting means is centrally positioned in relation to at least the axle assembly located towards the front leading end of the foot supporting member and is attachable to the foot

supporting member and the resilience means includes at least one pair of compressible springs positioned along the axle shaft at either or both the front leading end and the rear trailing end of the foot supporting member.

57. A method of adapting a personal conveyance for a range of recreational uses as claimed in Claim 55 wherein the optional braking means includes a stop which is deployed against the ground surface by tipping the rear or front of the foot supporting member downwards.

58. A method of steering a personal conveyance for recreational use, said personal conveyance including at least one foot supporting member, the foot supporting member including, or including provision for attachment of, at least two axle assemblies, said axle assemblies adapted to receive rotational motion-facilitating means having a preferred diameter, width and position; and further including steering means wherein the steering means includes pivoting means and resilience means manufactured such that the pivoting means is centrally positioned in relation to at least the axle assembly located towards the front leading end of the foot supporting member and is attachable to the foot supporting member and the resilience means includes at least one pair of compressible springs positioned along the axle at either or both the front leading end and the rear trailing end of the foot supporting member, and optional braking means, wherein the optional braking means includes a stop, the personal conveyance characterised by the motion-facilitating means diameter, width and position effecting a raised central axis of rotation of the motion-facilitating means, and providing a rotational motion-facilitating wheelbase of a length and width adapted to the weight of the user and being positioned relative to the foot supporting member such that at least a portion of the motion-facilitating means extends in a vertical plane above and perpendicular to the horizontal plane of the foot supporting member in a manner whereby stability is effected of either or both the personal conveyance and a person standing thereon, said method of steering including the steps of:

a) the user standing on said foot supporting member and effecting a shift in the position of applied body weight on the foot supporting member, said body weight effecting

b) compression of at least one front and/or one rear resilience means spring to effect pivoting of the pivoting means and the axle assembly resulting in

c) turning of the motion facilitating means; and

d) a directional change of the personal conveyance in the direction of applied weight; and wherein use of the

e) optional braking means slows down or completes the steering by deployment of the stop against the ground surface by tipping the rear or front of the foot supporting member downwards.

59. Steering means for use with a personal conveyance as claimed in Claim 1, said steering means including pivoting means and resilience means said pivoting means being centrally positioned in relation to at least a front axle assembly located towards the front leading end of the foot supporting member and being attachable to the foot supporting member, said pivoting means including a central pivot point for effecting pivoting with respect to a portion of the foot support member with which said pivot point contacts, said resilience means comprising at least one pair of compressible springs positioned along the axle assembly at either or both the front leading end and the rear trailing end of the foot supporting member.

60. A personal conveyance as claimed in any one of the preceding claims wherein the personal conveyance optionally includes guards relative to the motion facilitating means.

61. A personal conveyance substantially as described herein with reference to the included examples and attached drawings.

62. A steering means for use with a personal conveyance substantially as described herein with reference to the included examples and attached drawings.

63. A method of manufacturing a personal conveyance substantially as described herein with reference to the included examples and attached drawings.

64. A method of adapting a personal conveyance for a range of recreational uses substantially as described herein with reference to the included examples and attached drawings.

65. A method of steering a personal conveyance substantially as described herein with reference to the included examples and attached drawings.