Fig. 1

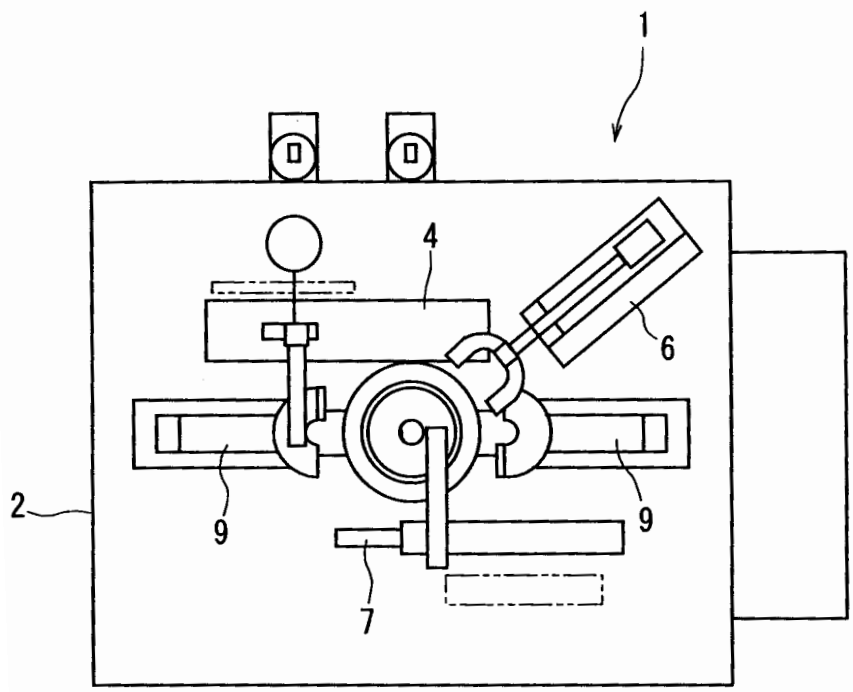

Fig. 2

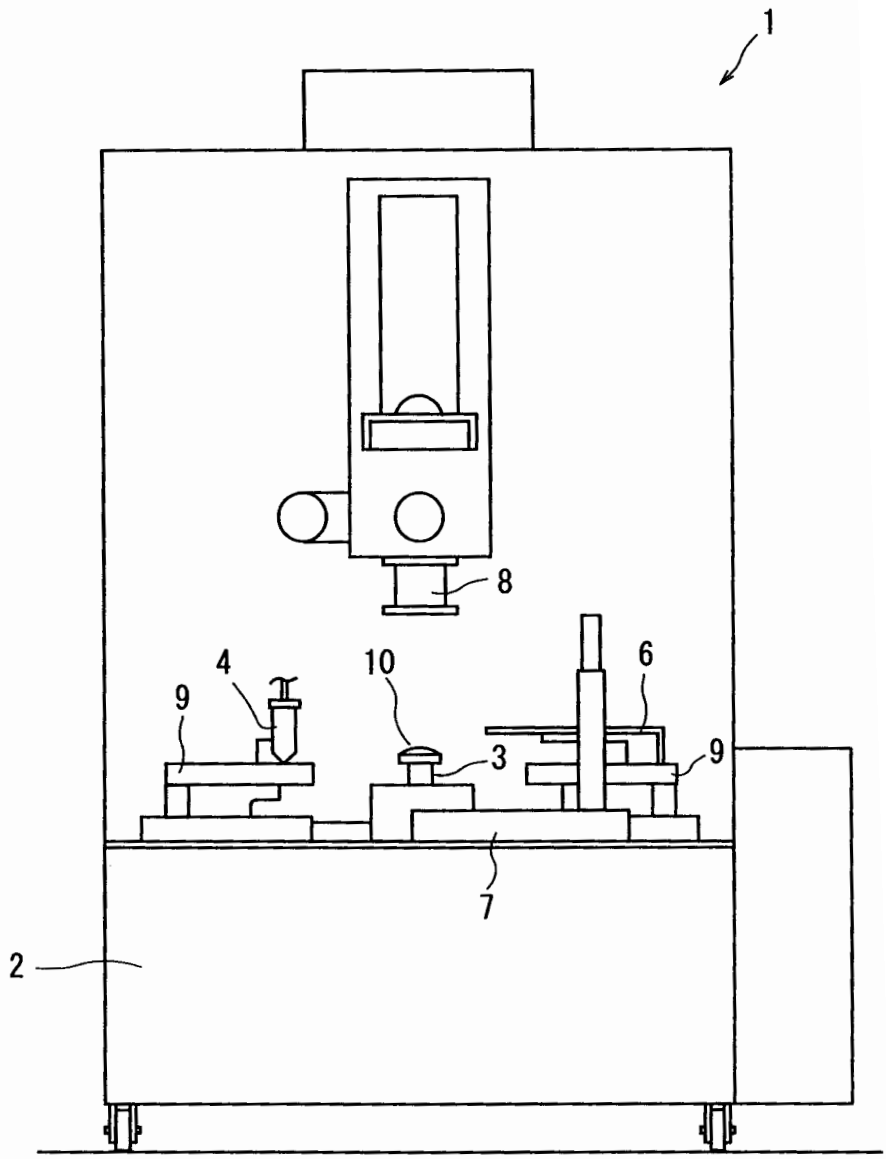

Fig. 3

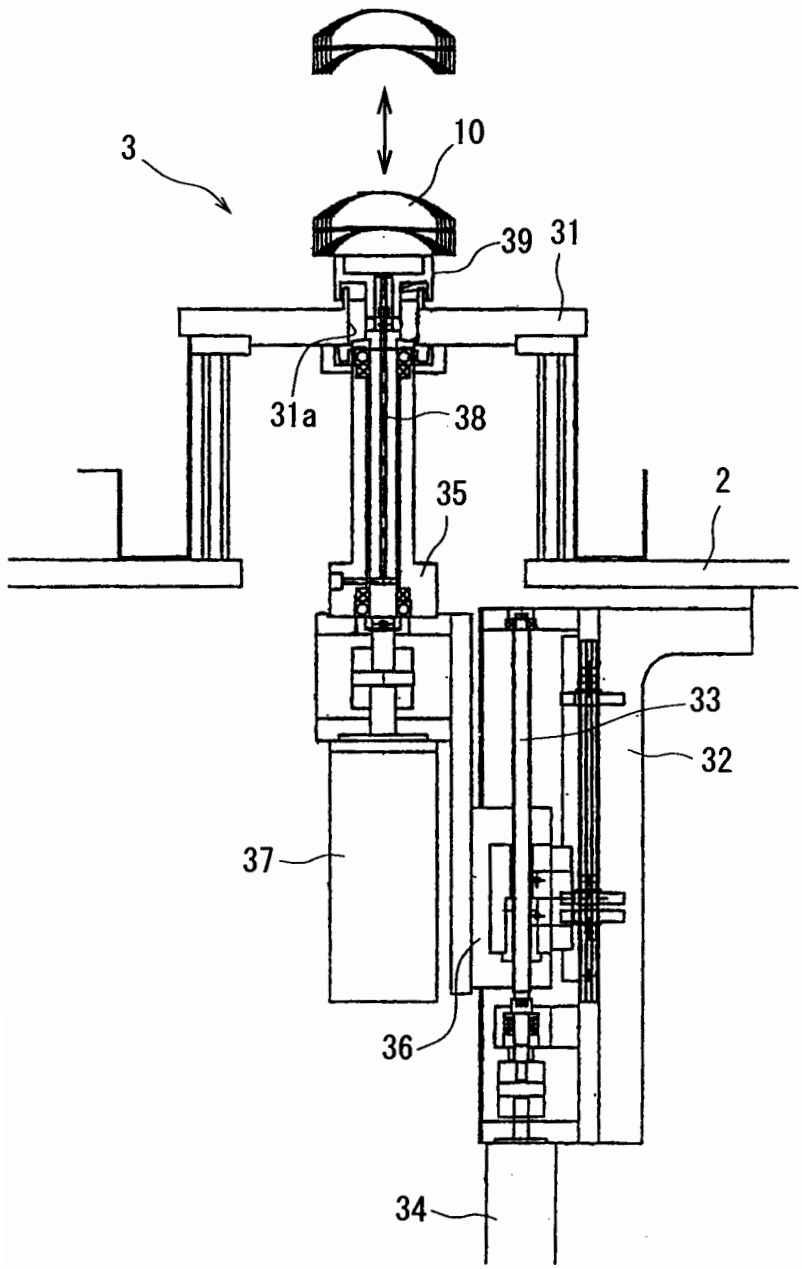

Fig. 4

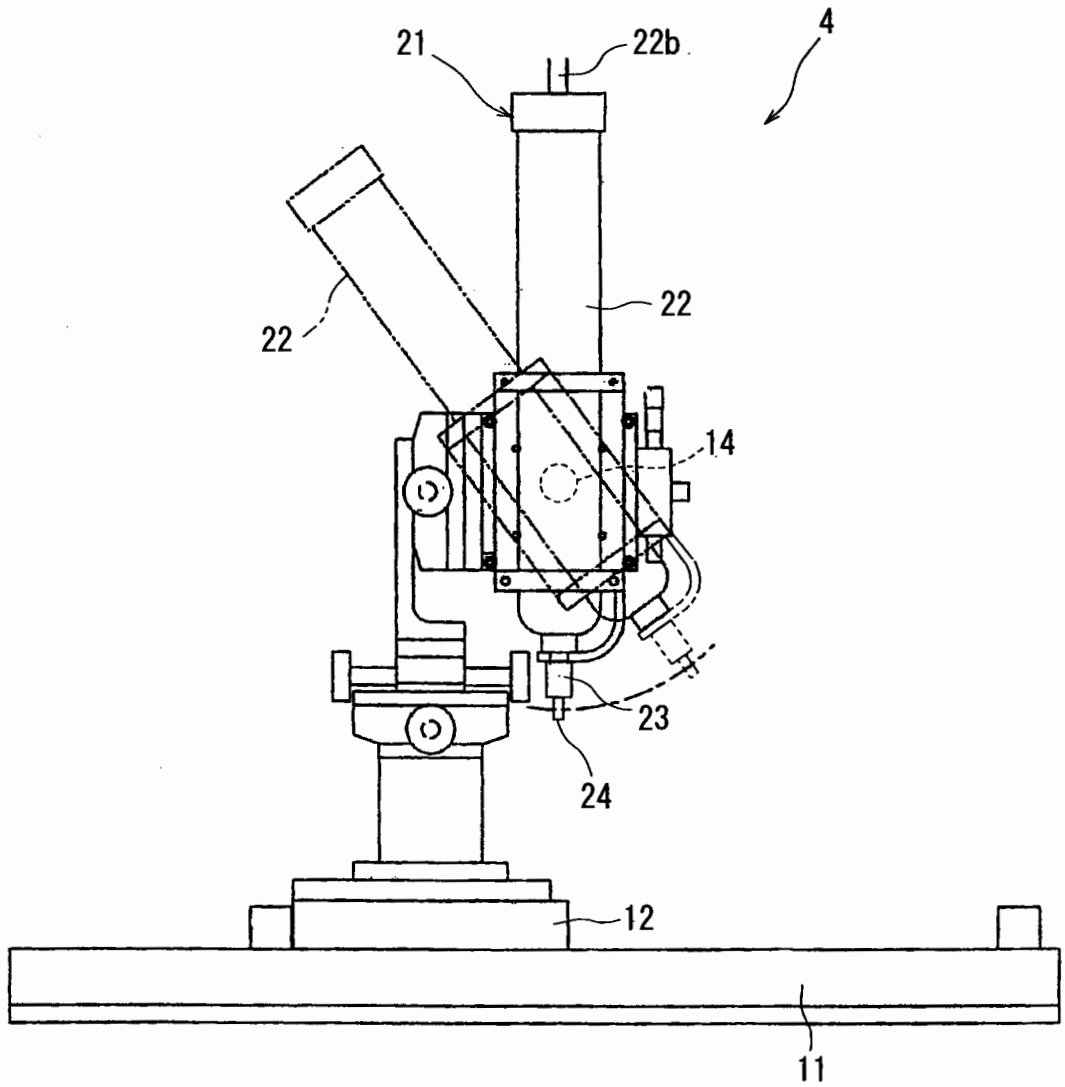

Fig. 5

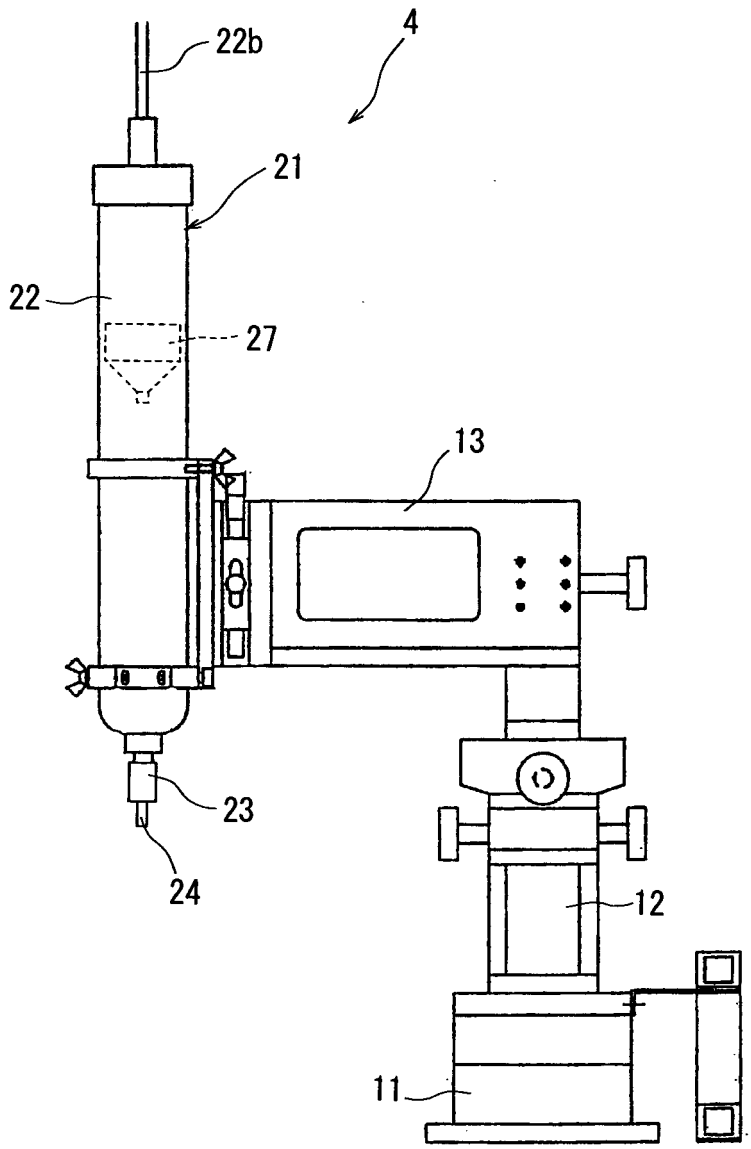

Fig. 6

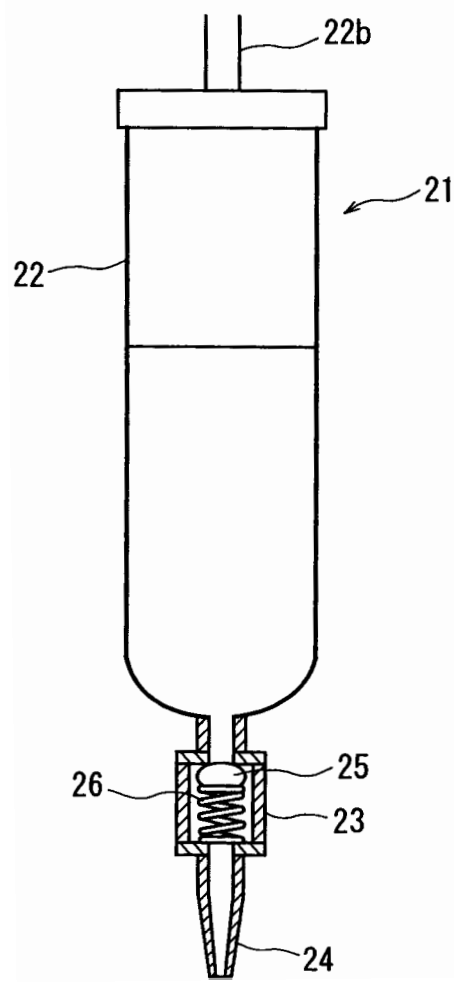

Fig. 7

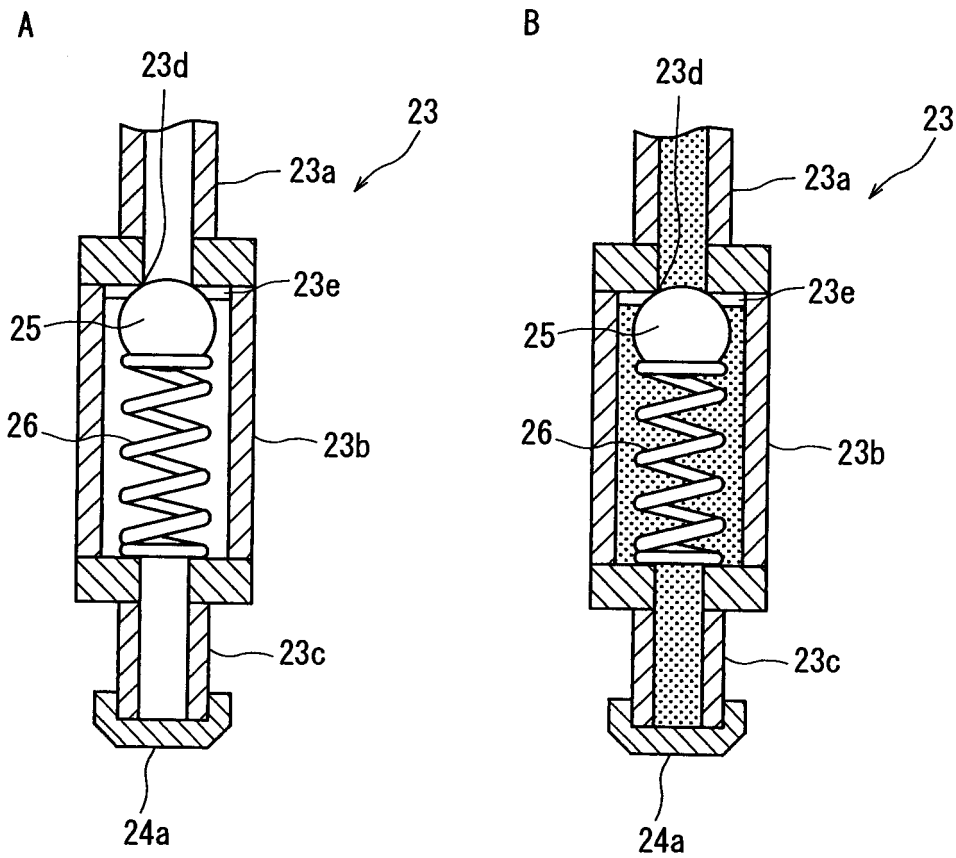
A
23d
23
23a
23e
25
26
23b
23c
24a
B
23d
23
23a
23e
25
26
23b
23c
24a

Fig. 8

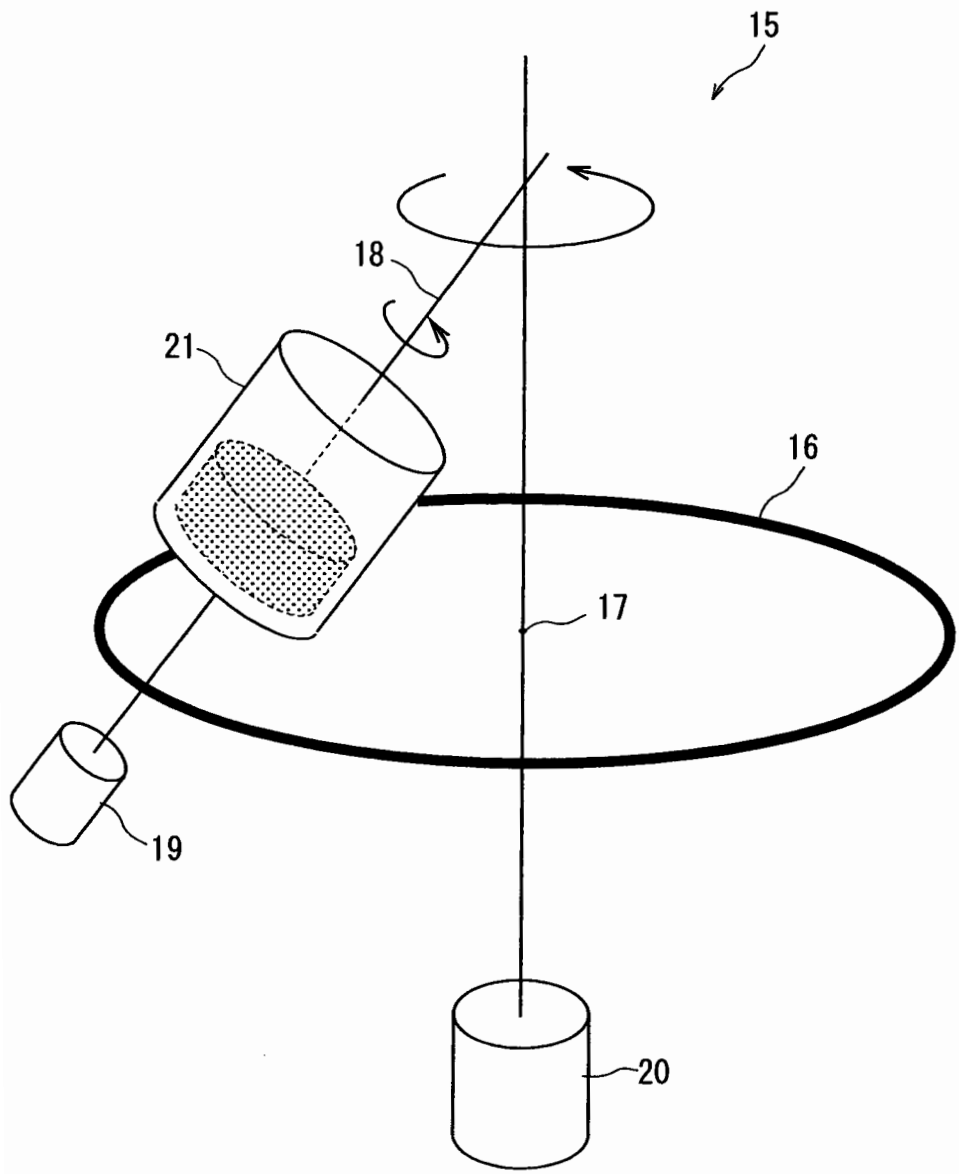

Fig. 9

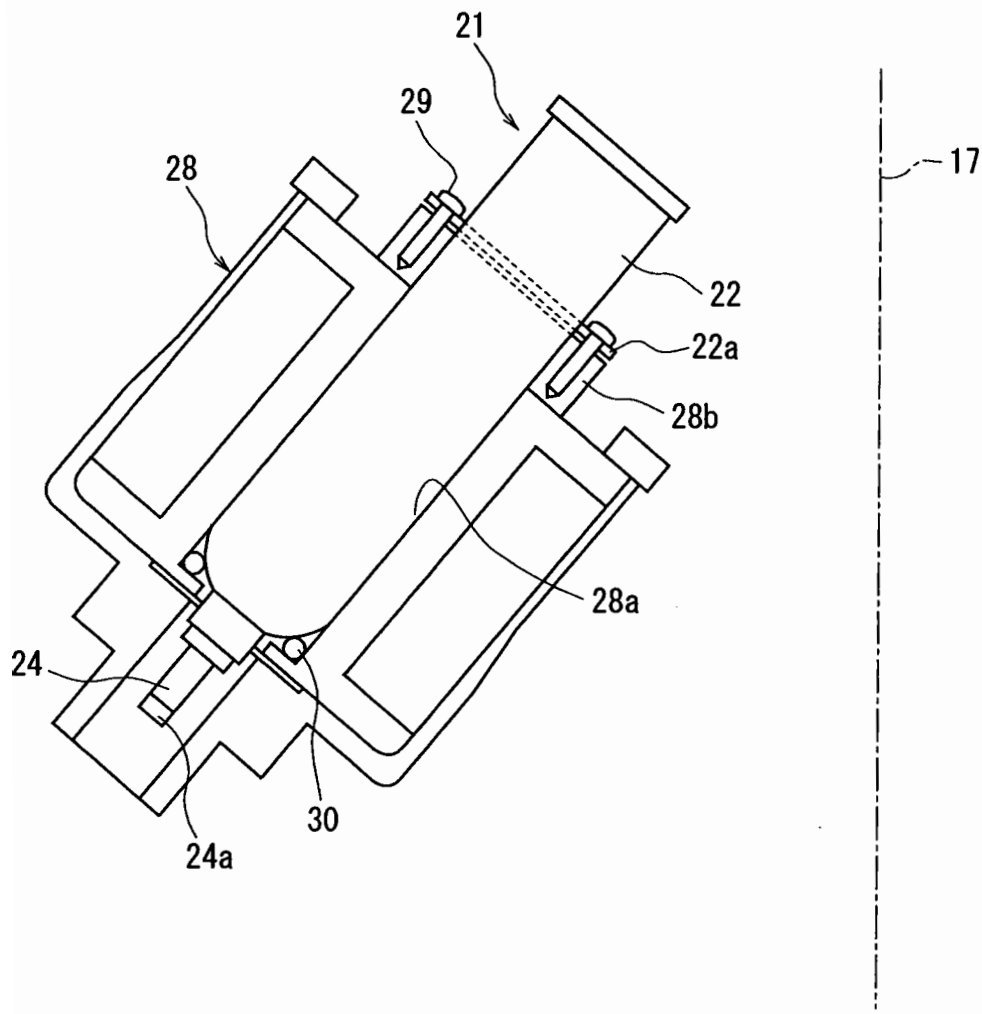

Fig. 10

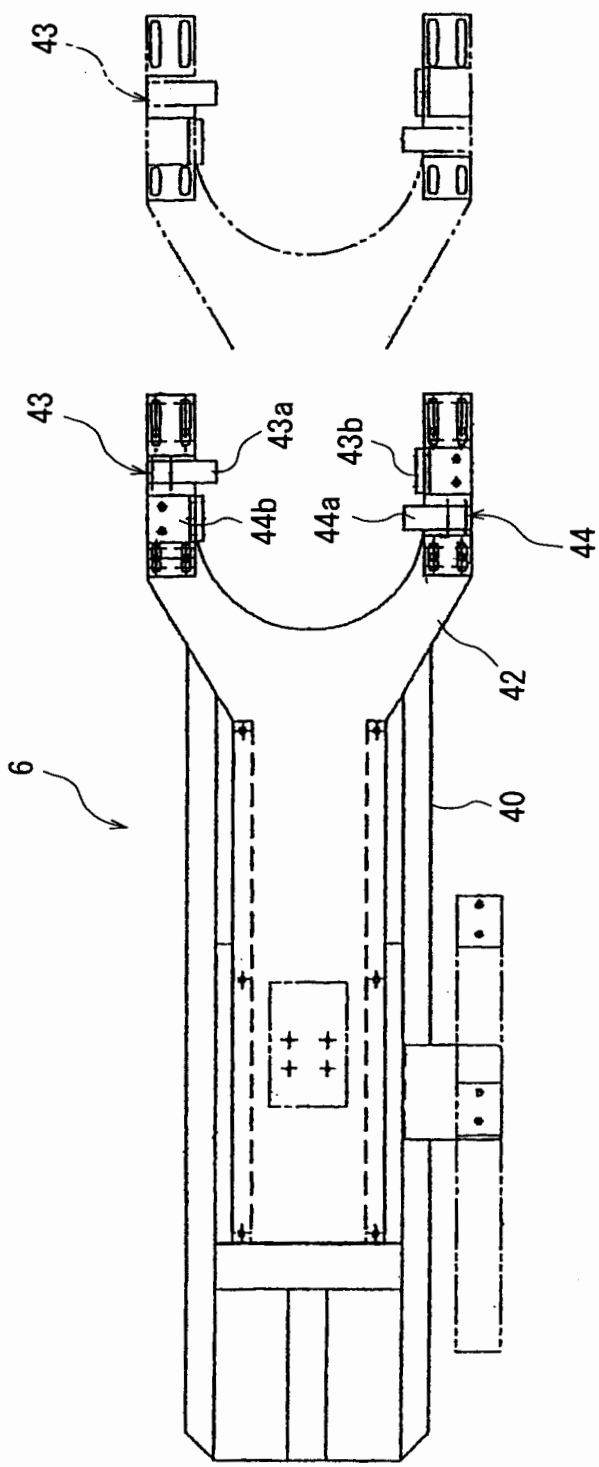

Fig. 11

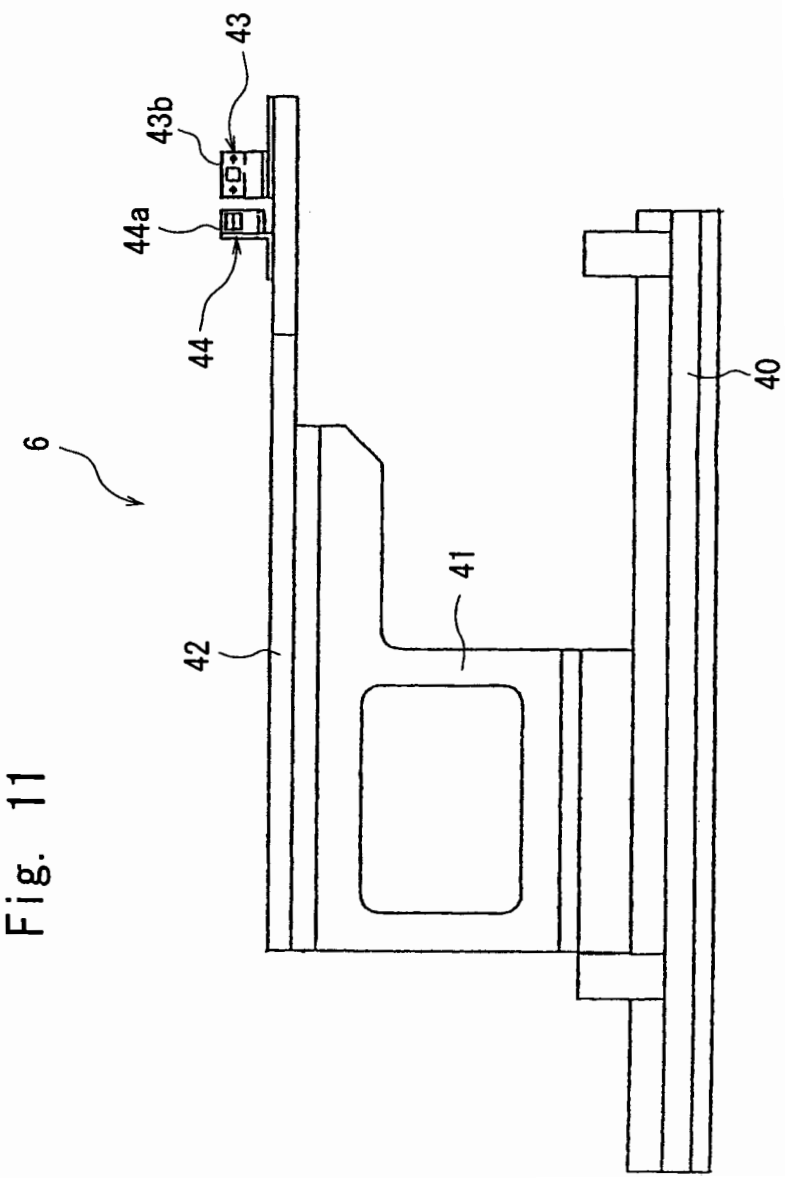

Fig. 12

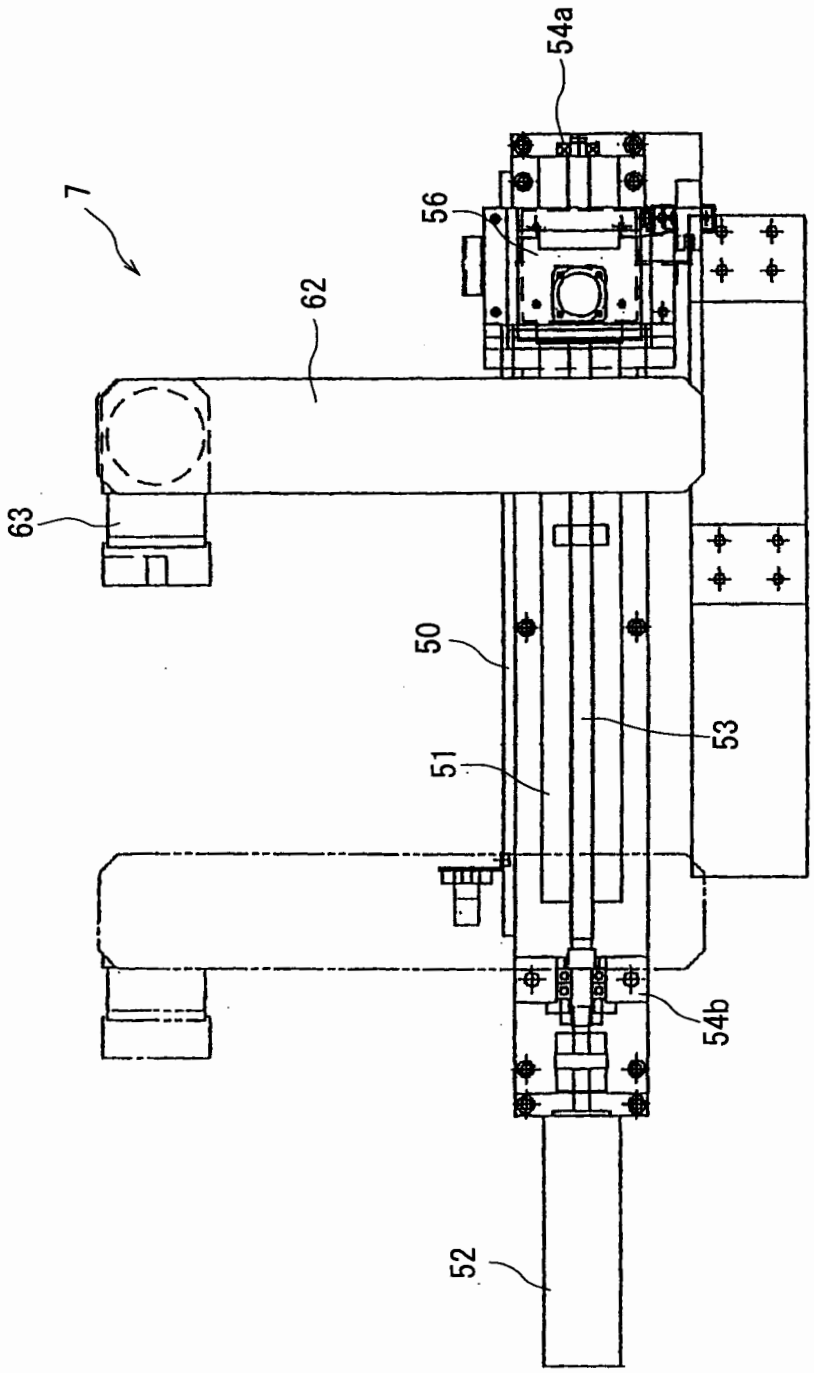

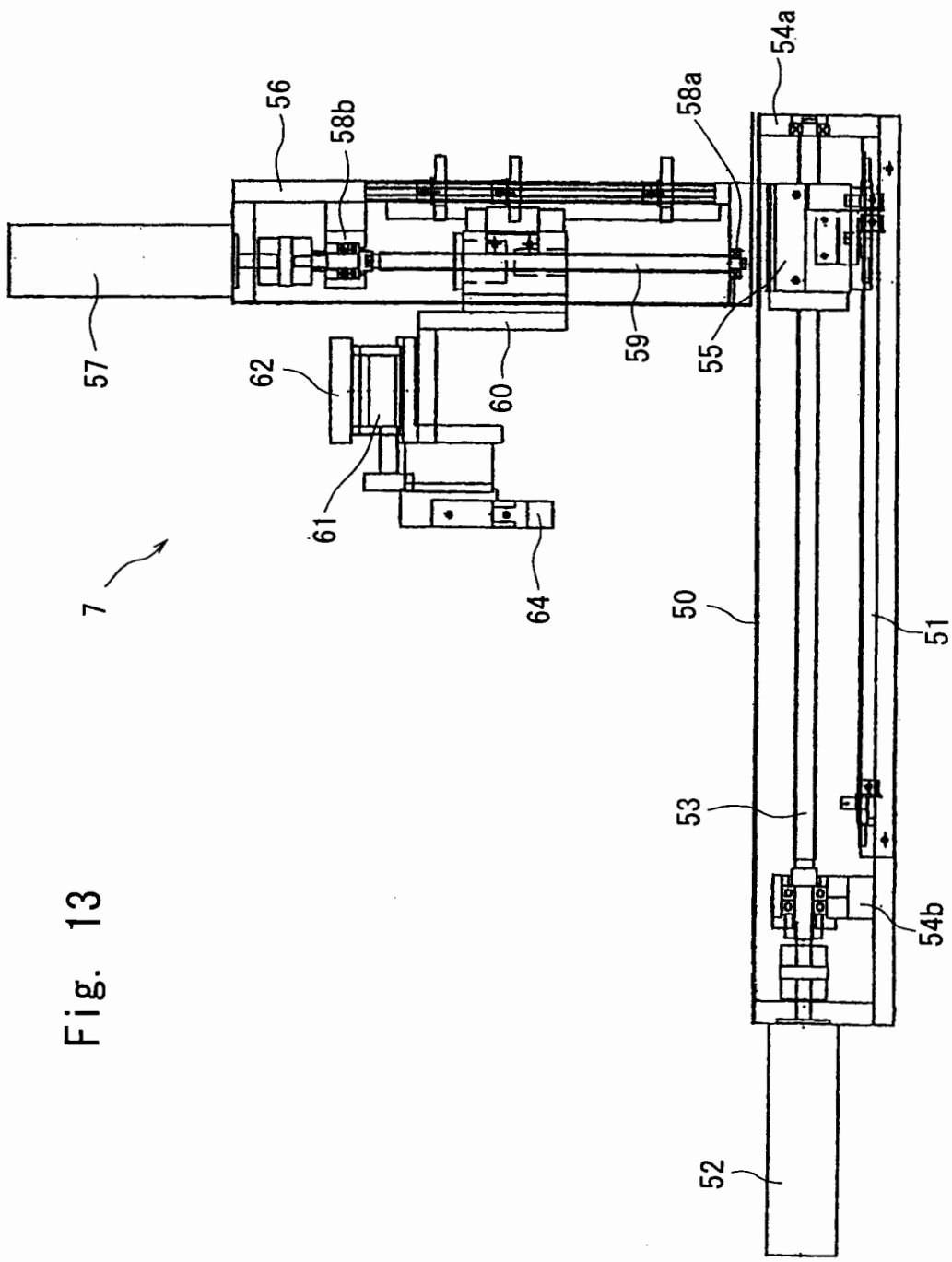

Fig. 13

Fig. 14

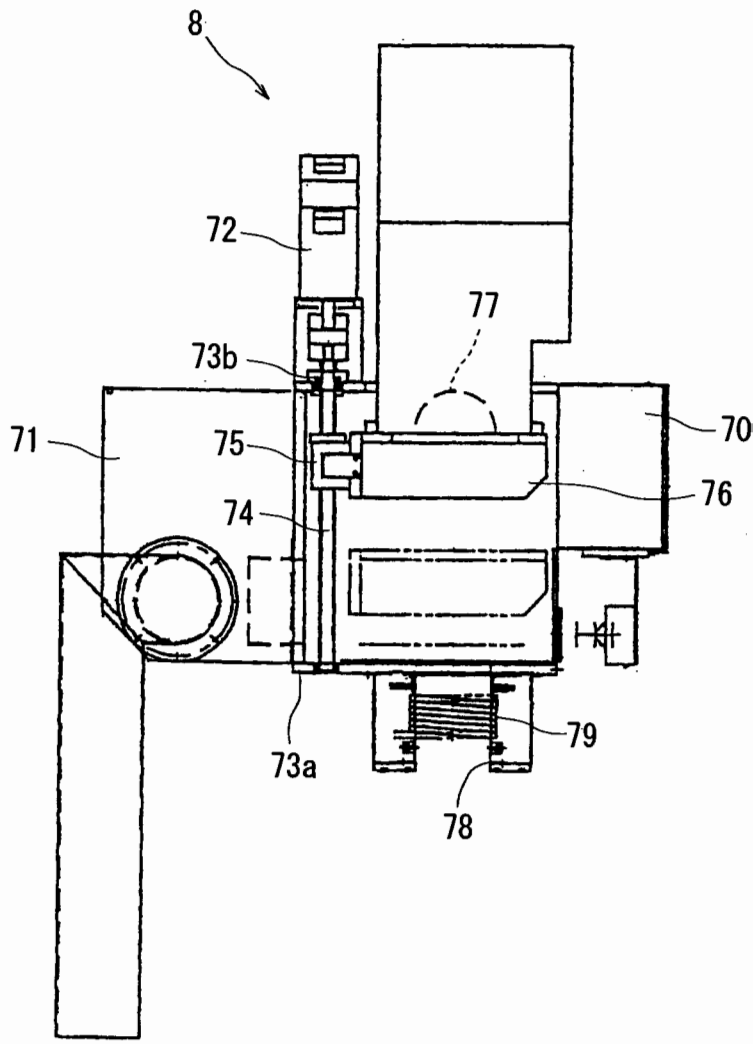

Fig. 15

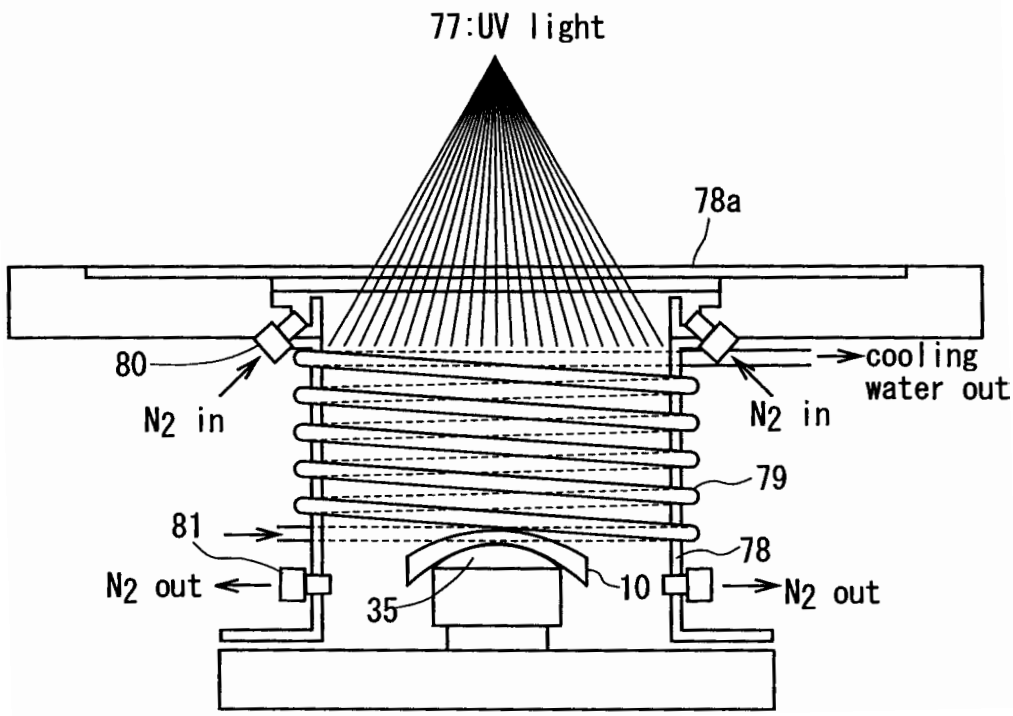
77:UV light
78a
80
N2 in
N2 in
cooling
water out
79
81
78
N2 out
35
10
N2 out

Fig. 16

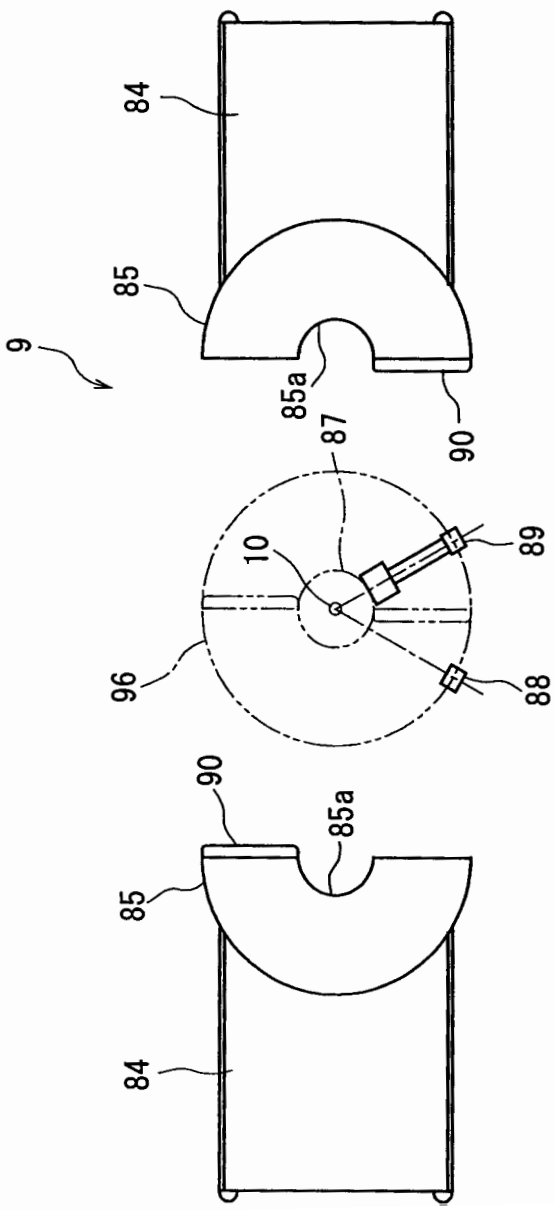

Fig. 17

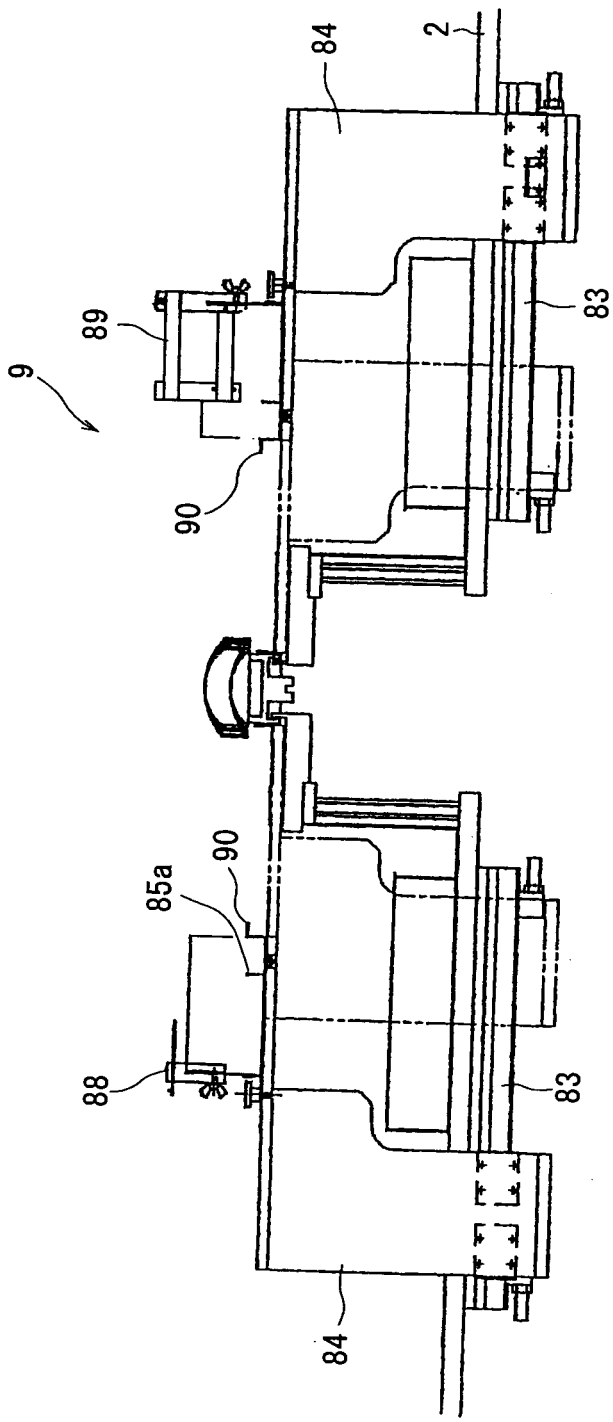

Fig. 18

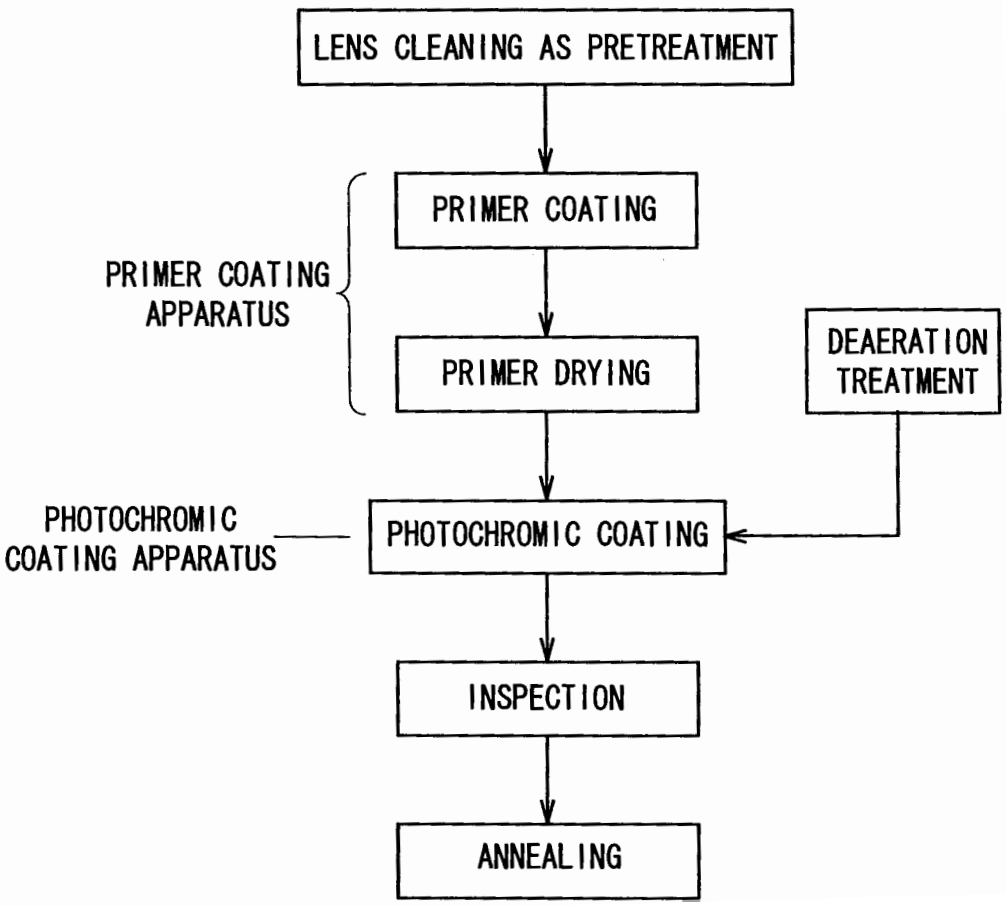
LENS CLEANING AS PRETREATMENT
PRIMER COATING
PRIMER COATING APPARATUS
PRIMER DRYING
DEAERATION TREATMENT
PHOTOCHROMIC COATING APPARATUS
PHOTOCHROMIC COATING
INSPECTION
ANNEALING

Fig. 19

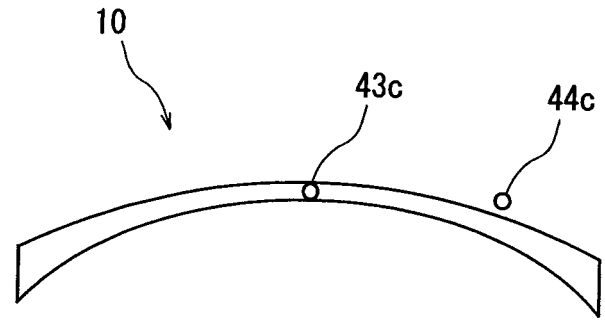

A

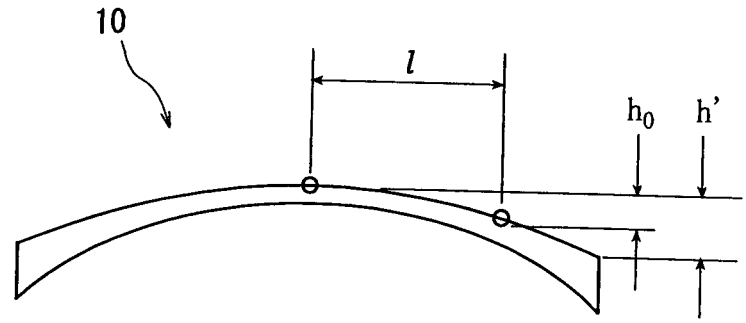

B