PCT WORLD INTELLECTUAL PROPERTY ORGANIZATION
International Bureau

INTERNATIONAL APPLICATION PUBLISHED UNDER THE PATENT COOPERATION TREATY (PCT)

(51) International Patent Classification [7]: A61K 9/14, 31/00, 38/00	A1	(11) International Publication Number: **WO 00/30614**
		(43) International Publication Date: 2 June 2000 (02.06.00)

(21) International Application Number: PCT/SE99/02154

(22) International Filing Date: 22 November 1999 (22.11.99)

(30) Priority Data:
9804000-9 23 November 1998 (23.11.98) SE

(71) Applicant *(for all designated States except US)*: ASTRAZENECA AB [SE/SE]; S-151 85 Södertälje (SE).

(72) Inventors; and

(75) Inventors/Applicants *(for US only)*: BISRAT, Mikael [SE/SE]; Astra Arcus AB, S-151 85 Södertälje (SE). MOSHASHEE, Saeed [SE/SE]; Astra Arcus AB, S-151 85 Södertälje (SE). NYQVIST, Håkan [SE/SE]; Astra Arcus AB, S-151 85 Södertälje (SE). DEMIRBÜKER, Mustafa [TR/SE]; Microdim, Högbyvägen 76, S-175 46 Järfälla (SE).

(74) Agent: ASTRAZENECA AB; Intellectual Property, Patents, S-151 85 Södertälje (SE).

(81) Designated States: AE, AL, AM, AT, AU, AZ, BA, BB, BG, BR, BY, CA, CH, CN, CR, CU, CZ, DE, DK, DM, EE, ES, FI, GB, GD, GE, GH, GM, HR, HU, ID, IL, IN, IS, JP, KE, KG, KP, KR, KZ, LC, LK, LR, LS, LT, LU, LV, MA, MD, MG, MK, MN, MW, MX, NO, NZ, PL, PT, RO, RU, SD, SE, SG, SI, SK, SL, TJ, TM, TR, TT, TZ, UA, UG, US, UZ, VN, YU, ZA, ZW, ARIPO patent (GH, GM, KE, LS, MW, SD, SL, SZ, TZ, UG, ZW), Eurasian patent (AM, AZ, BY, KG, KZ, MD, RU, TJ, TM), European patent (AT, BE, CH, CY, DE, DK, ES, FI, FR, GB, GR, IE, IT, LU, MC, NL, PT, SE), OAPI patent (BF, BJ, CF, CG, CI, CM, GA, GN, GW, ML, MR, NE, SN, TD, TG).

Published
With international search report.
Before the expiration of the time limit for amending the claims and to be republished in the event of the receipt of amendments.

(54) Title: A PROCESS FOR PRODUCING PARTICLES WITH A CONVERTED AMORPHOUS AND/OR META-STABLE CRYSTALLINE REGION INTO CRYSTALLINE STATE

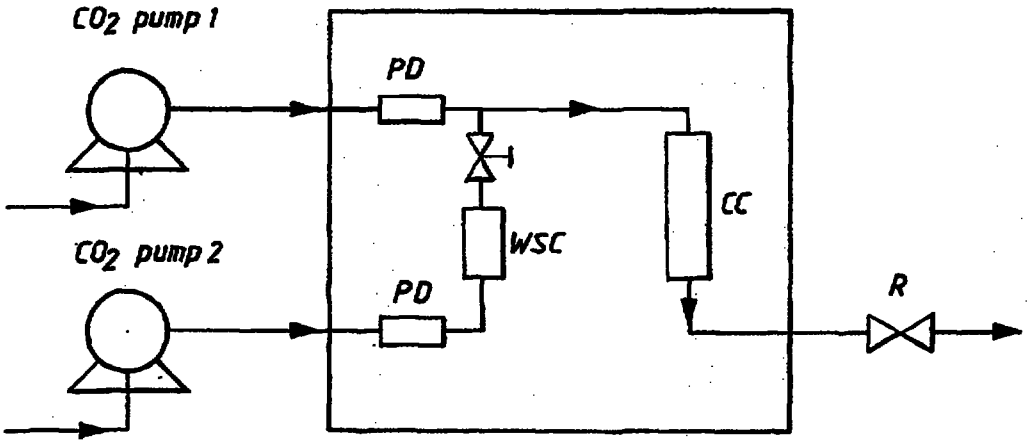

(57) Abstract

The invention provides a process for crystallization of amorphous and/or meta-stable crystalline regions of preformed particles by treating the particles with a supercritical or subcritical fluid containing an anti-solvent and a solvent. The invention further provides formulations comprising particles produced according to the present process containing one or more pharmacologically active substances and one or more pharmaceutically acceptable excipients, use of said formulations in the treatment of an allergic and/or inflammatory condition of the nose or lungs and methods for treatment of such conditions.