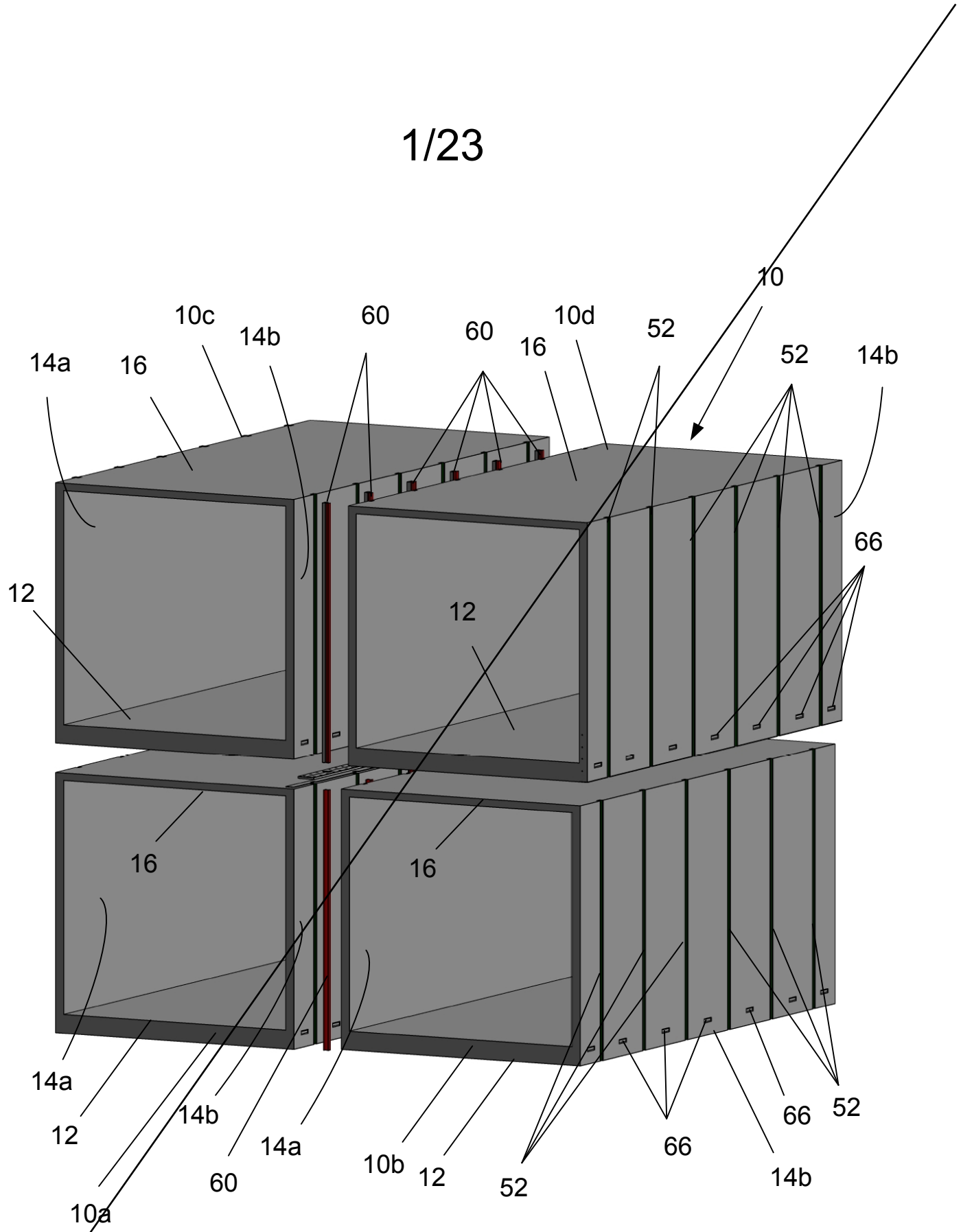
10
10c
14b
60
60
10d
52
14a
16
16
52
14b
66
12
12
16
16
14a
12
14b
14a
10b
12
66
66
52
52
14b
60
10a

Figure 1

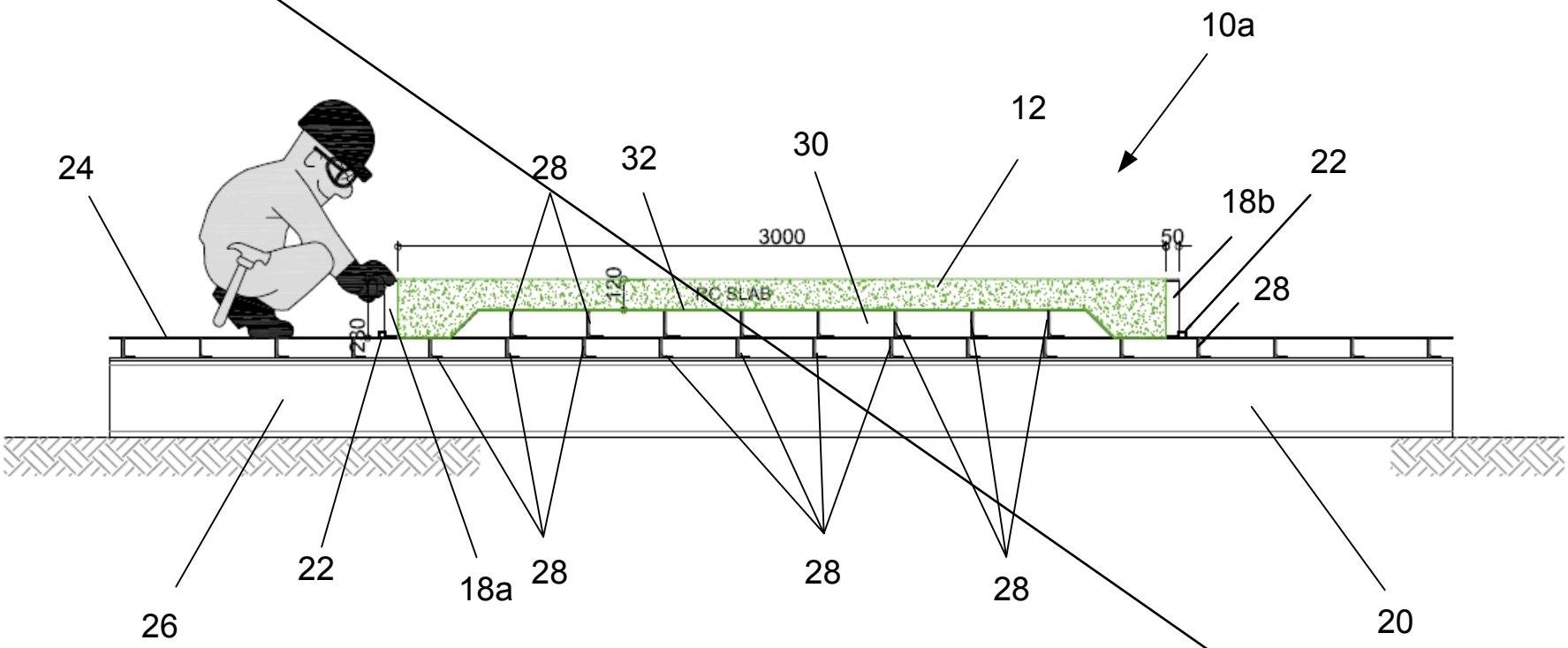
10a
12
24
28
32
30
22
18b
28
3000
50
120
RC SLAB
280
26
22
18a
28
28
28
28
20

Figure 2a

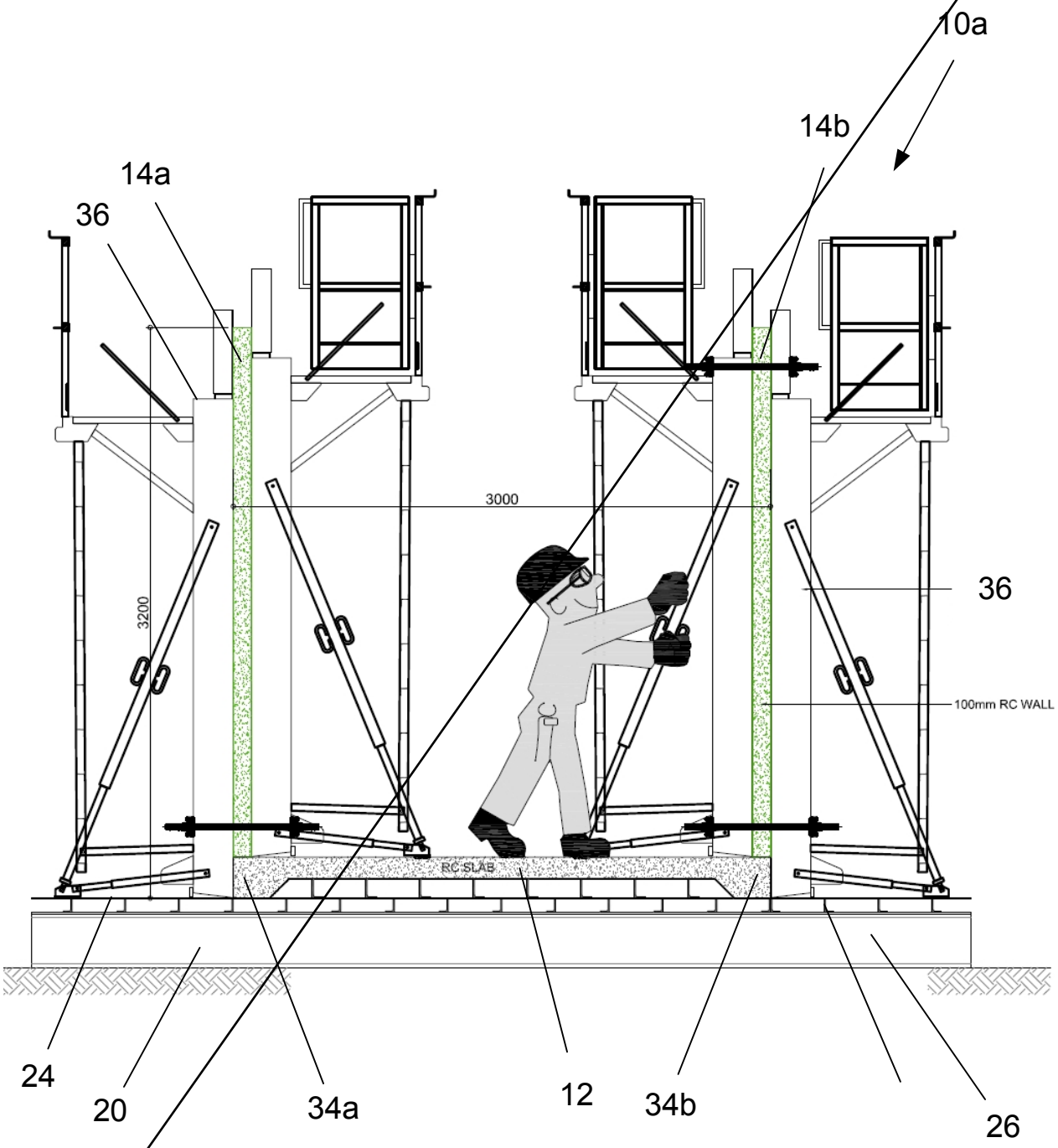
10a
14b
14a
36
3000
3200
36
100mm RC WALL
RC SLAB
24
20
34a
12
34b
26

Figure 2b

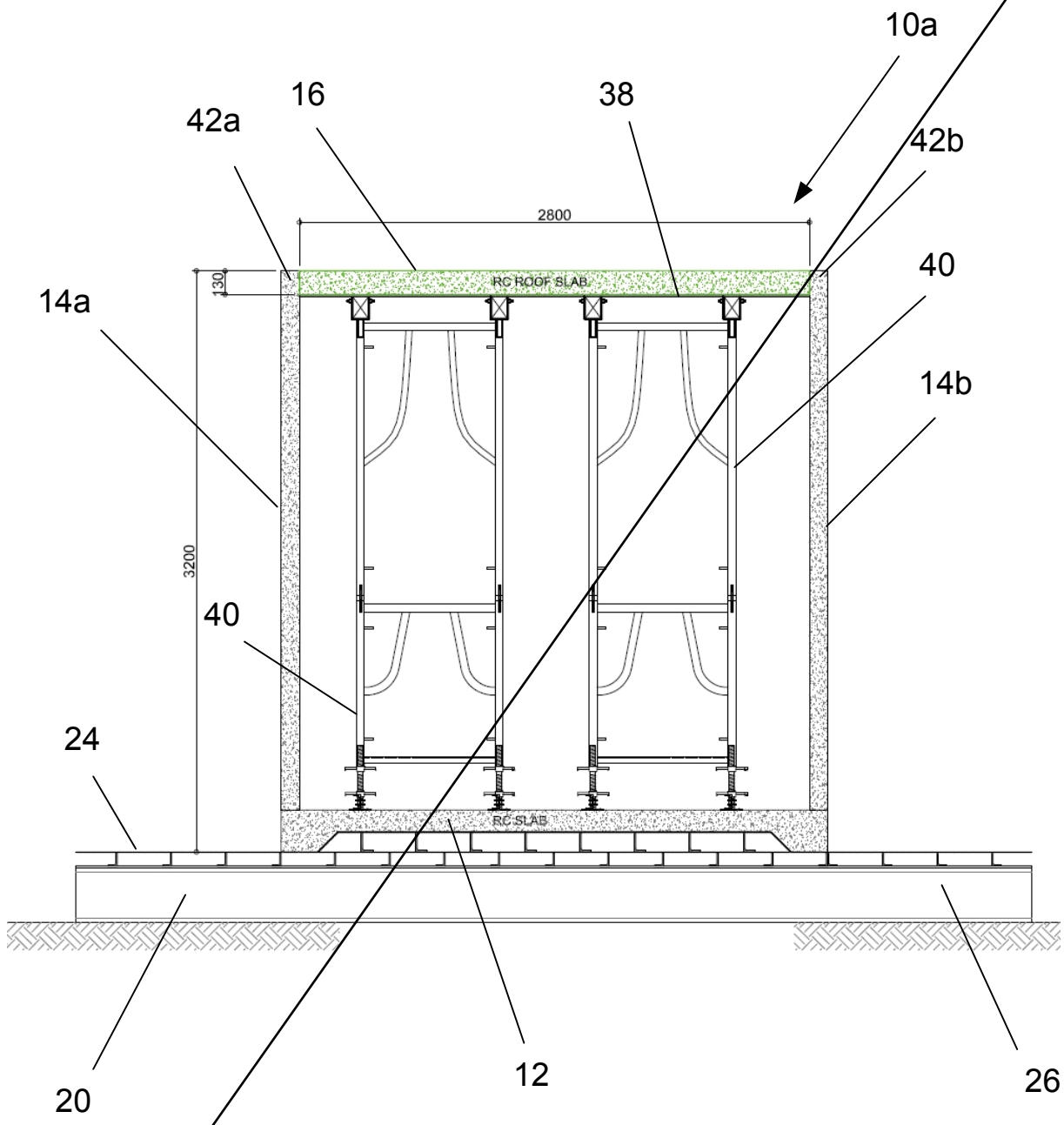
10a
16
38
42a
42b
2800
130
RC ROOF SLAB
40
14a
14b
3200
40
24
RC SLAB
20
12
26

Figure 2c

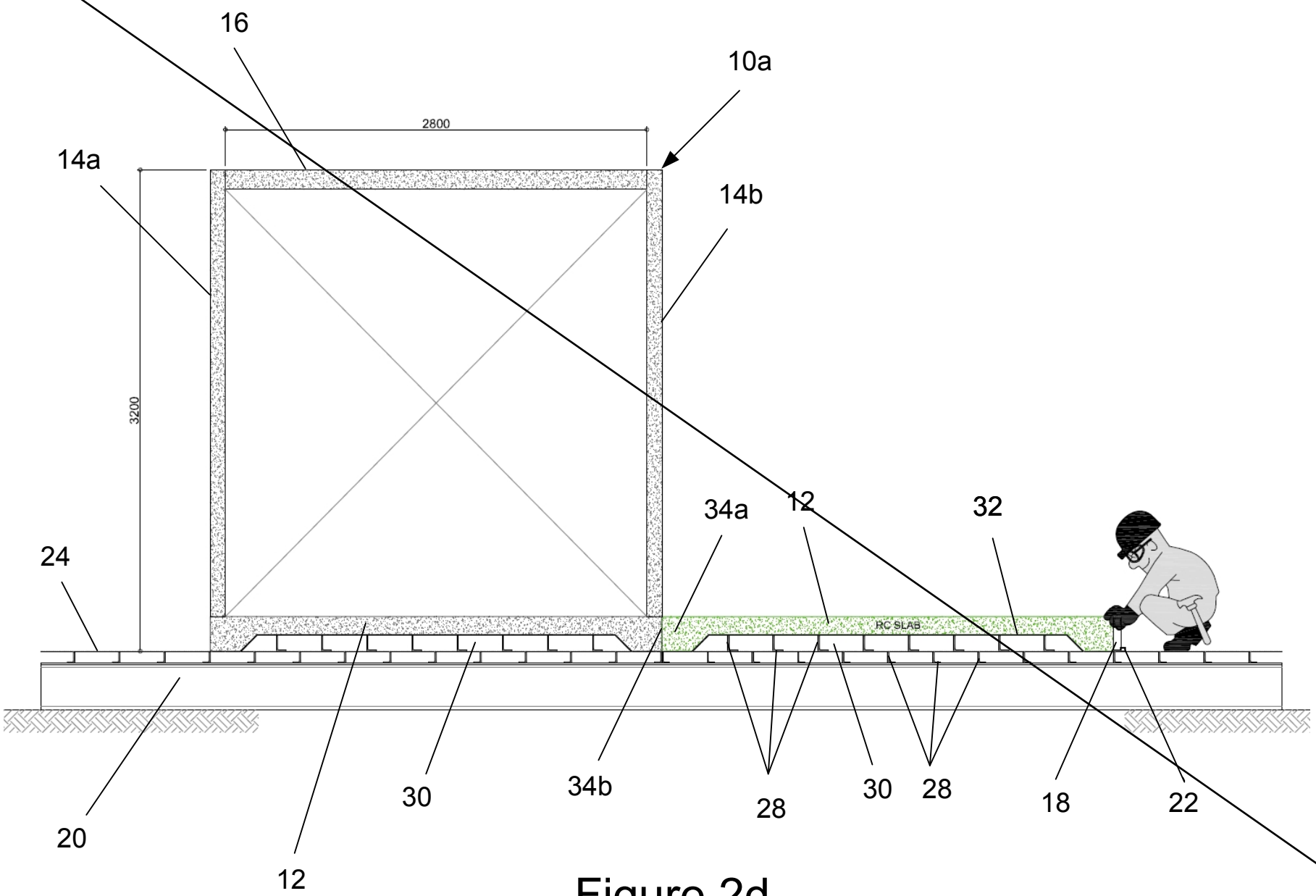
16
10a
2800
14a
14b
3200
34a
12
32
24
RC SLAB
20
12
30
34b
28
30
28
18
22

Figure 2d

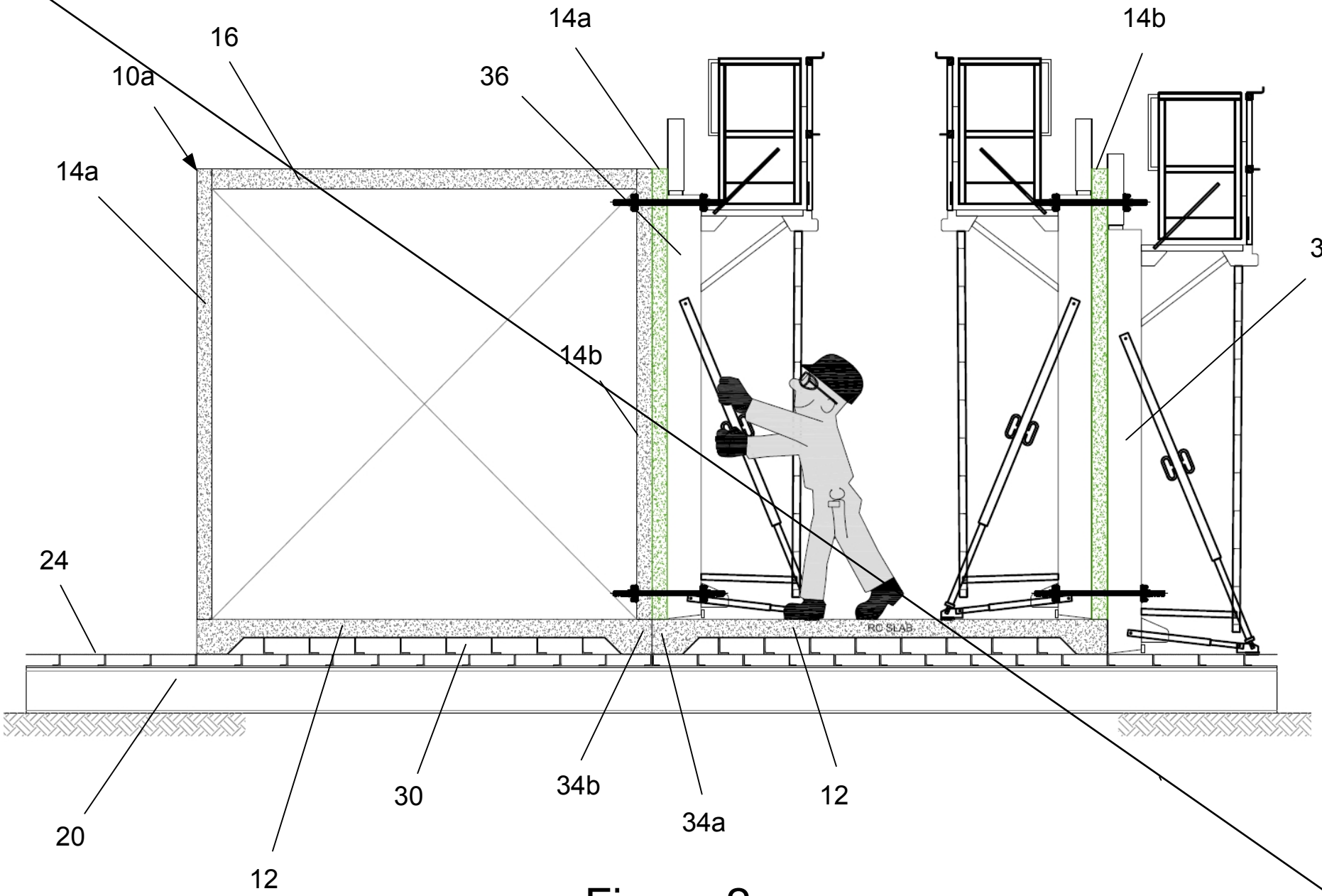

Figure 2e

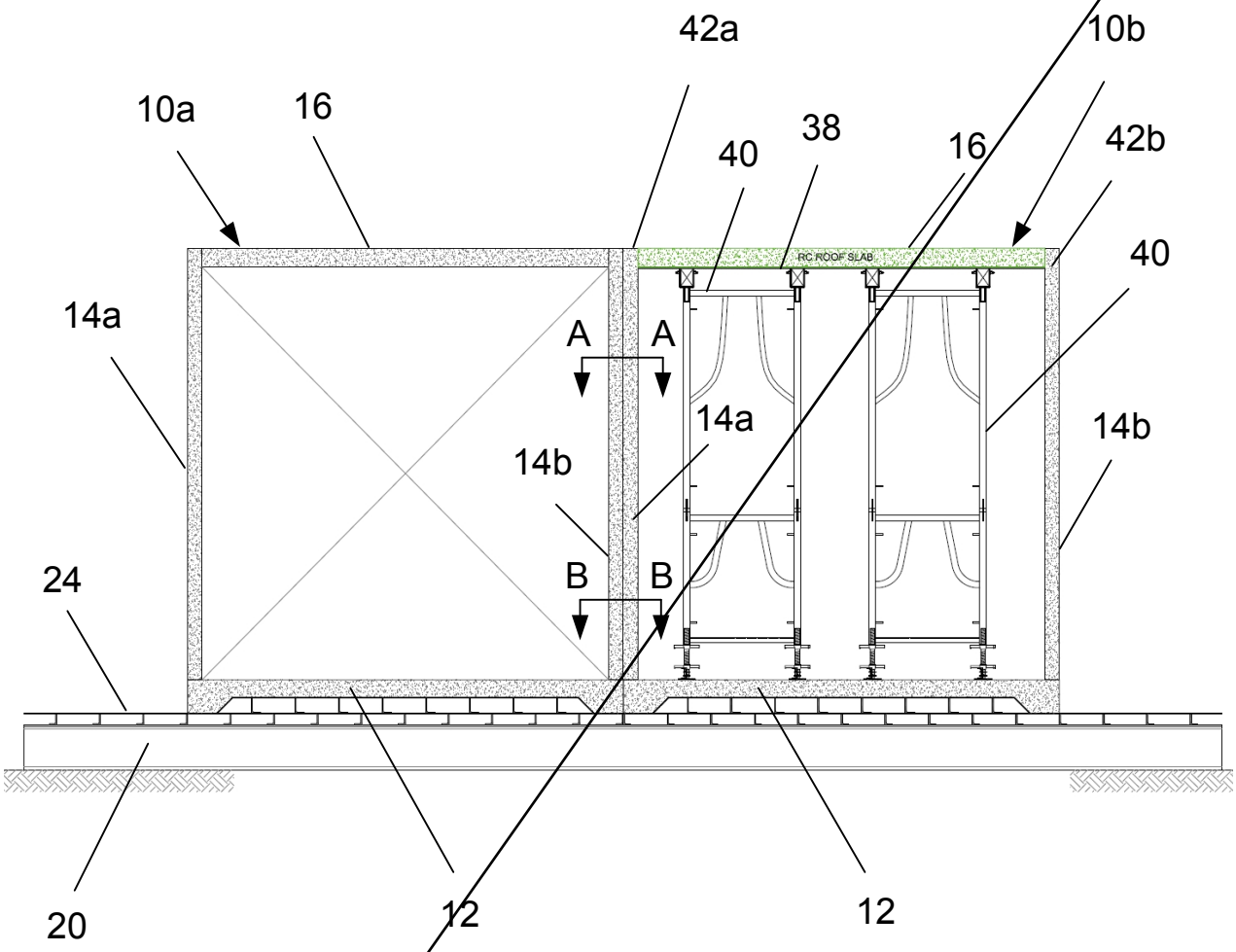
42a
10b
10a
16
38
16
42b
40
40
RC ROOF SLAB
14a
A
A
14a
14b
14b
B
B
24
20
12
12

Figure 2f

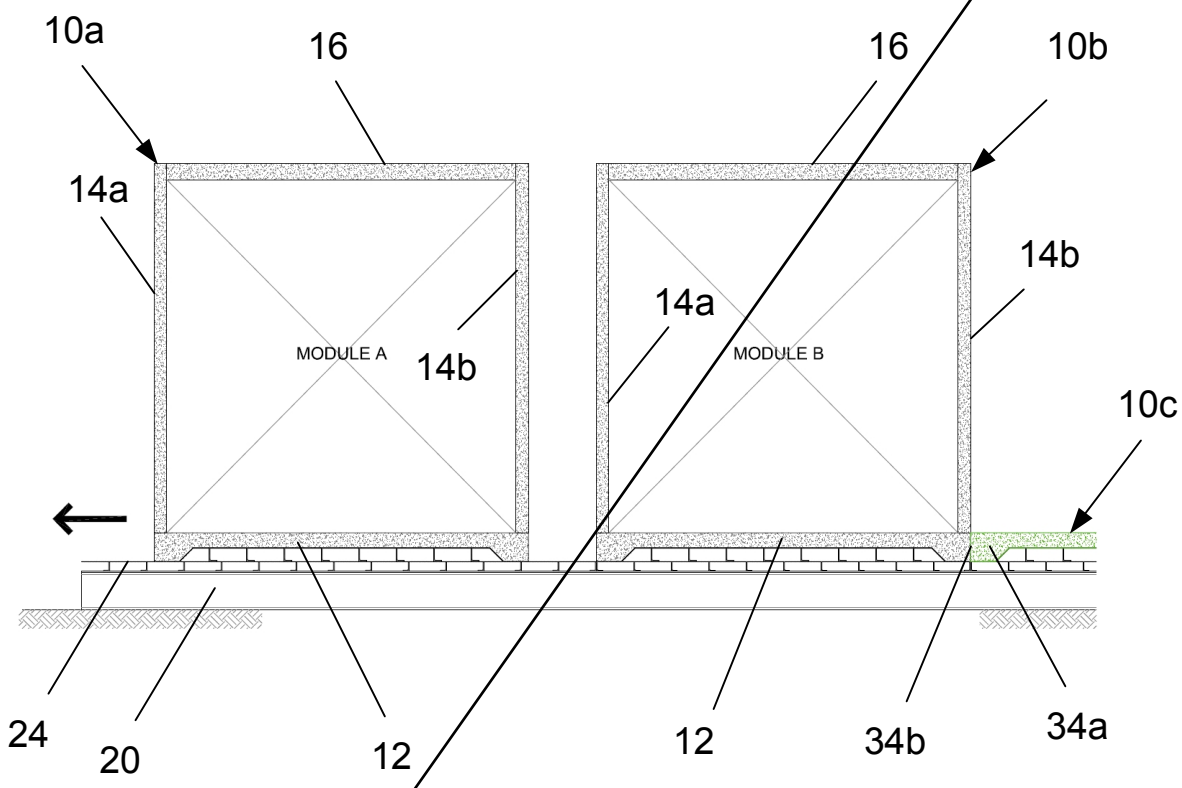
10a
16
16
10b
14a
14b
14a
MODULE A
14b
MODULE B
10c
24
20
12
12
34b
34a

Figure 2g

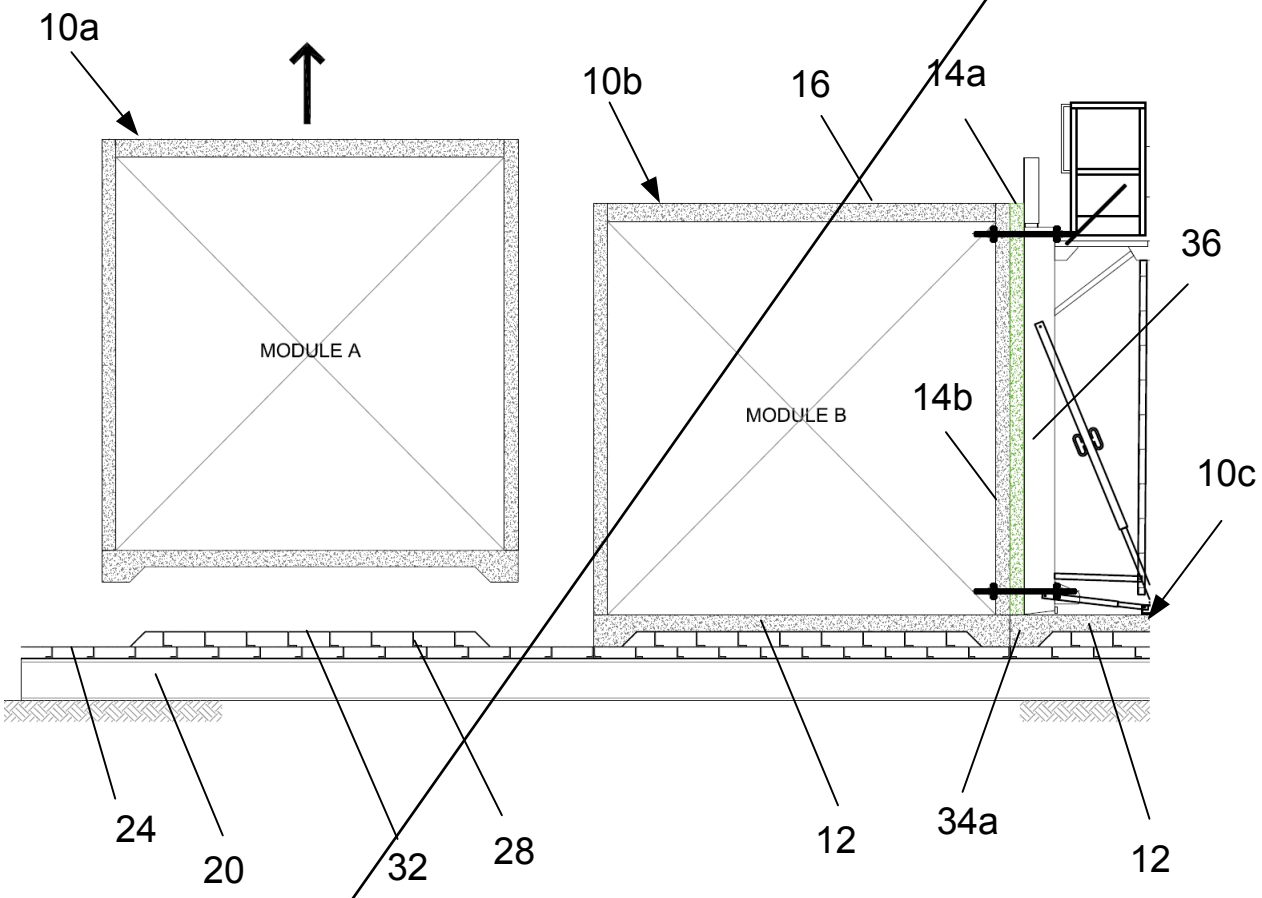

Figure 2h

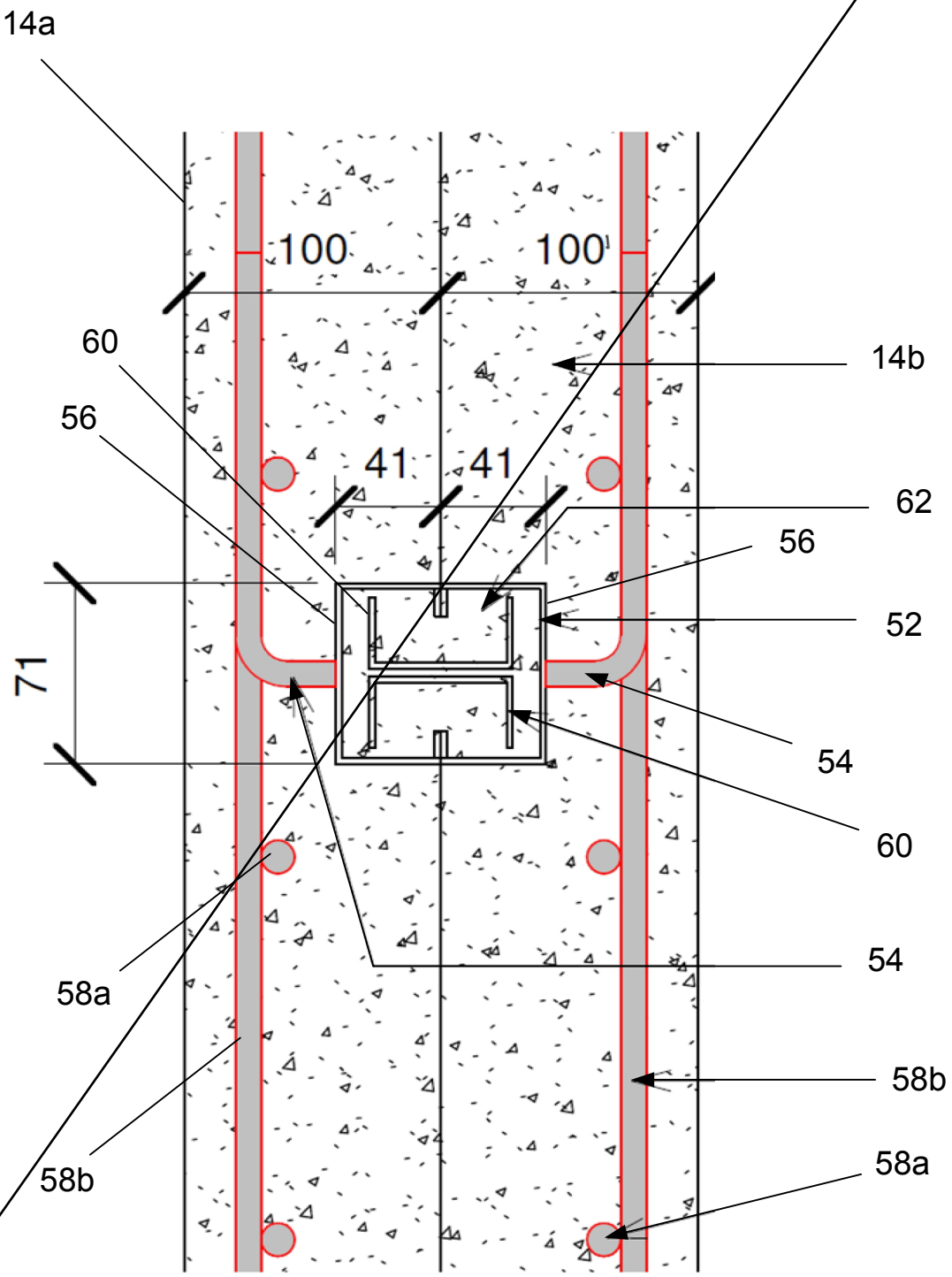

Figure 4a

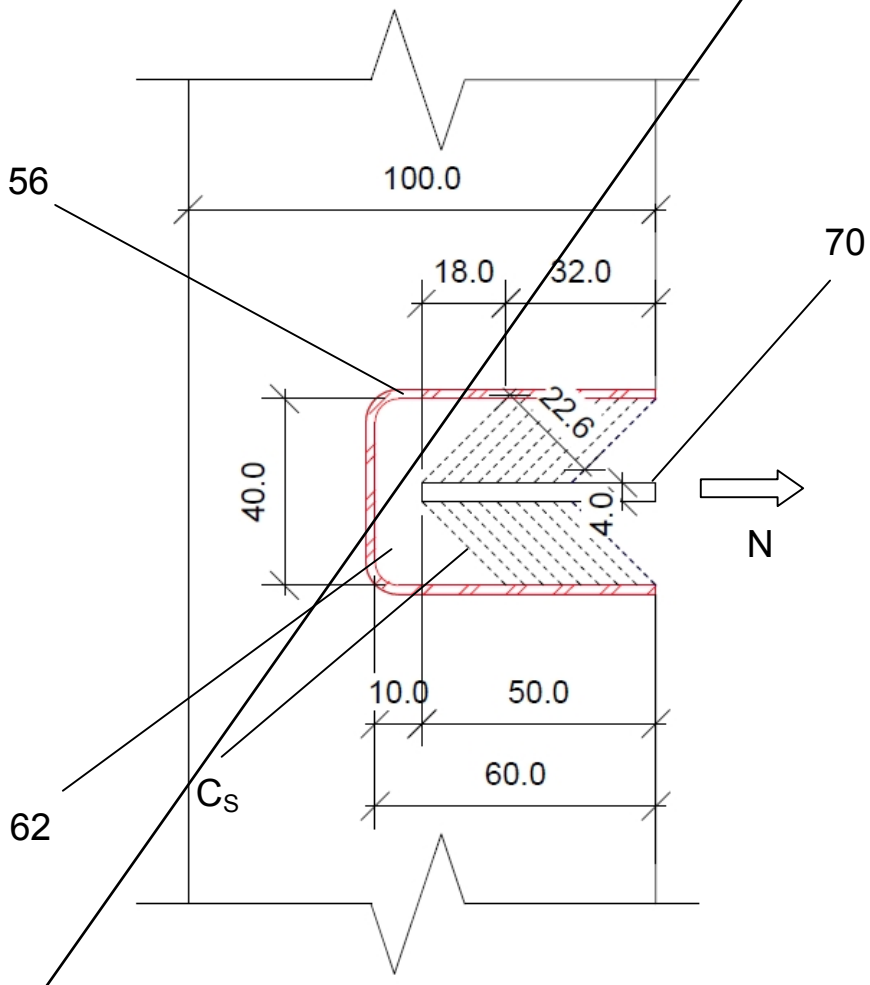

Figure 4d

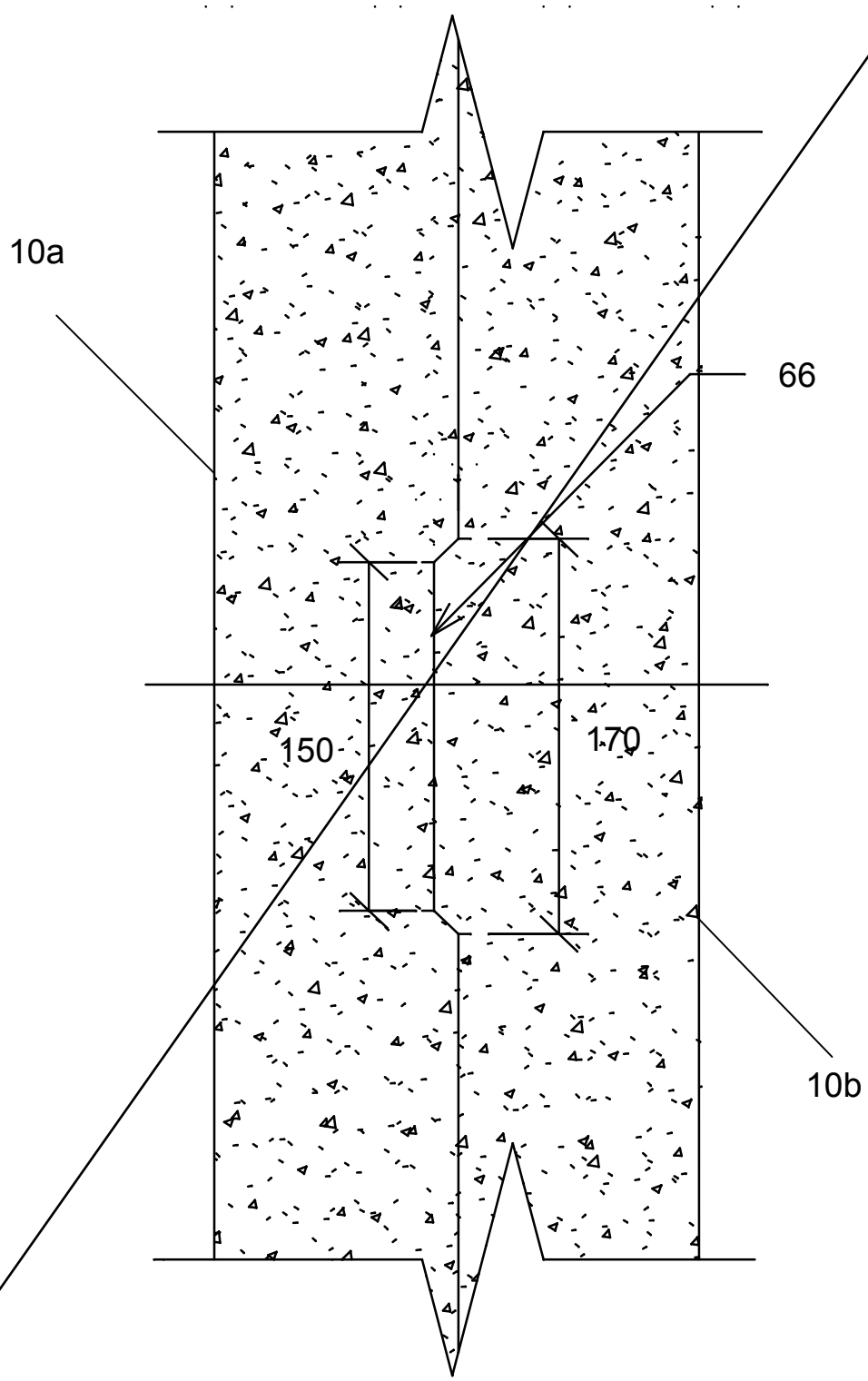

Figure 4d

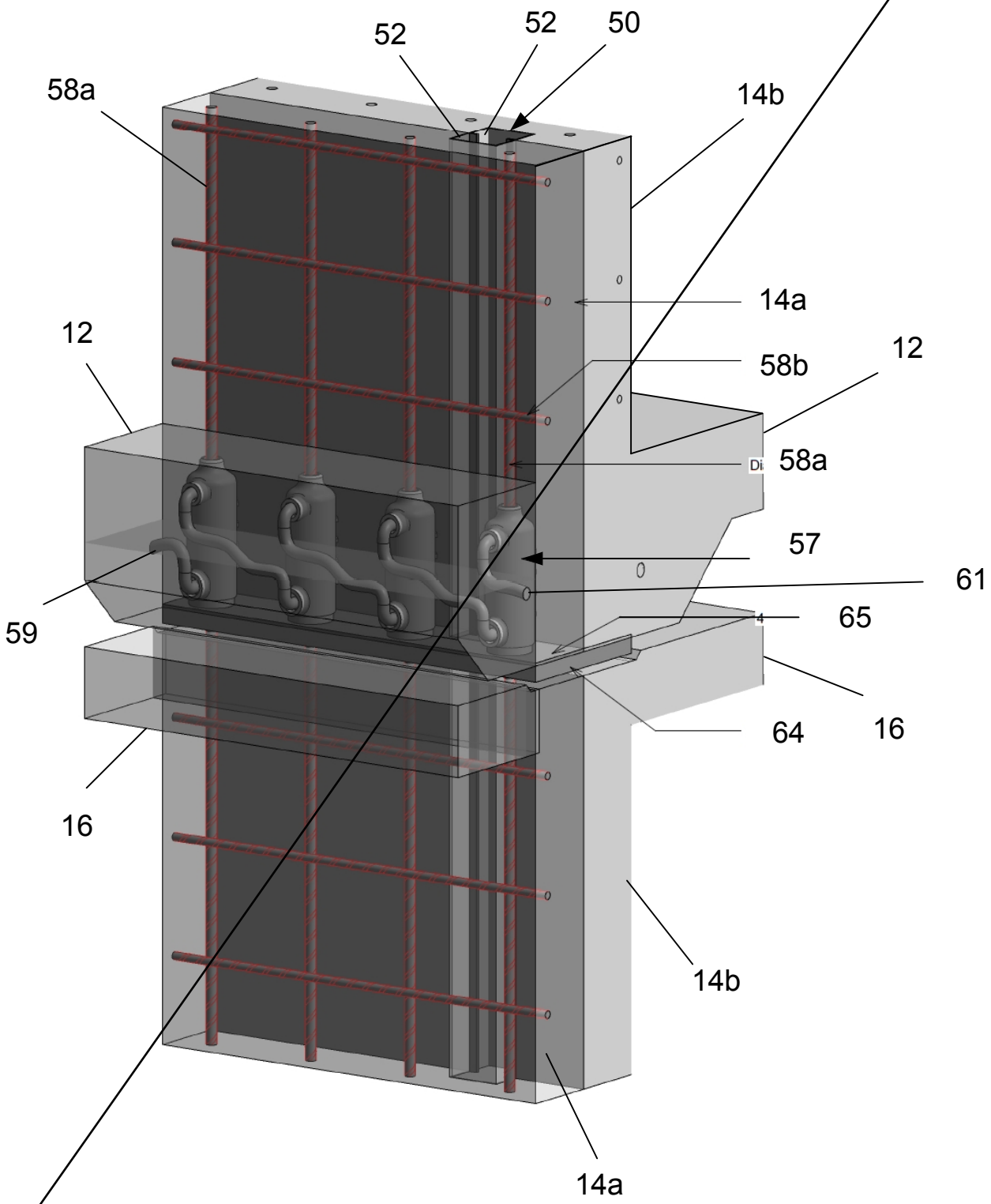

Figure 5a

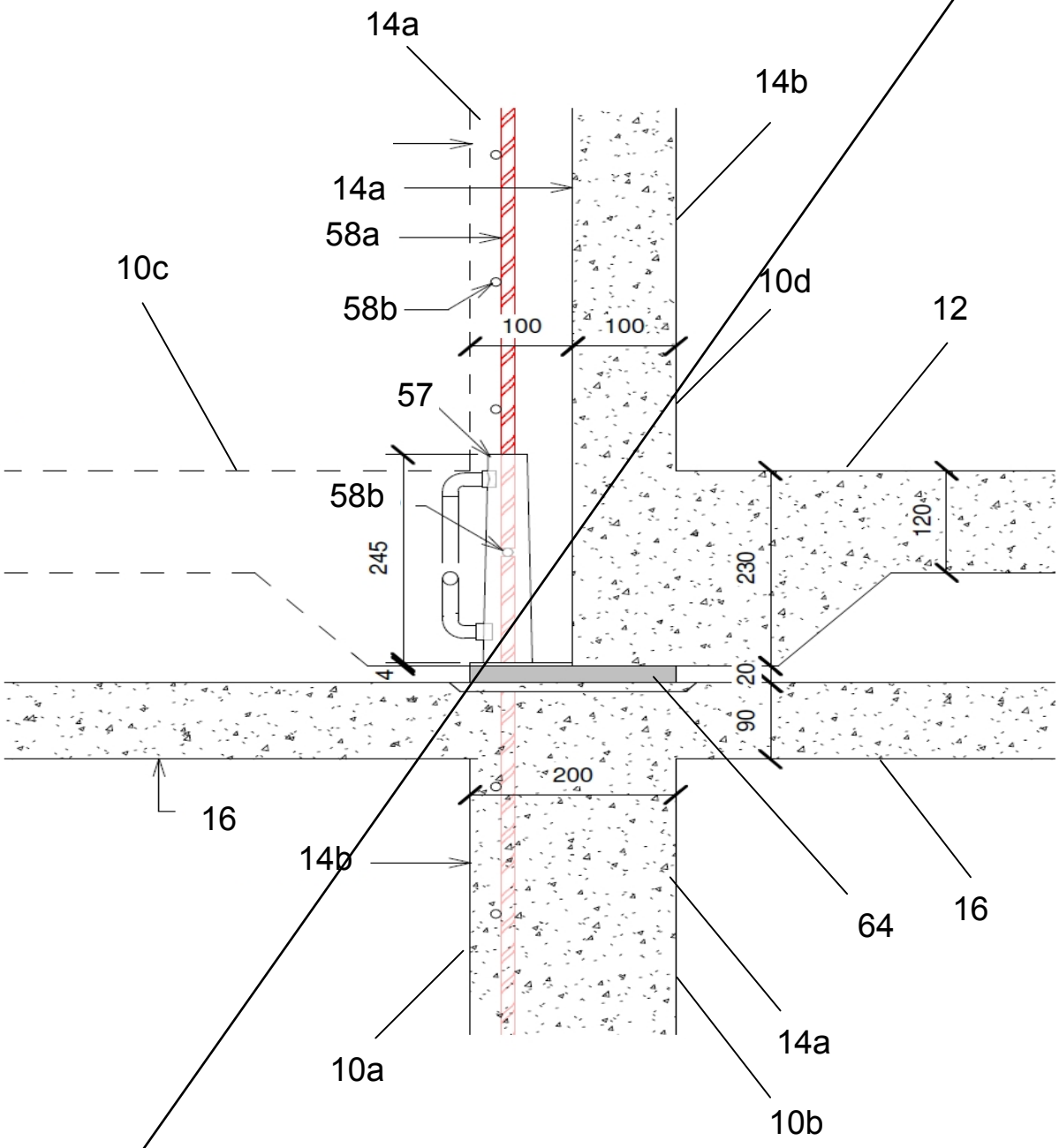
14a
14b
14a
58a
10c
58b
10d
12
100
100
57
58b
245
230
120
4
20
90
200
16
14b
64
16
14a
10a
10b

Figure 6

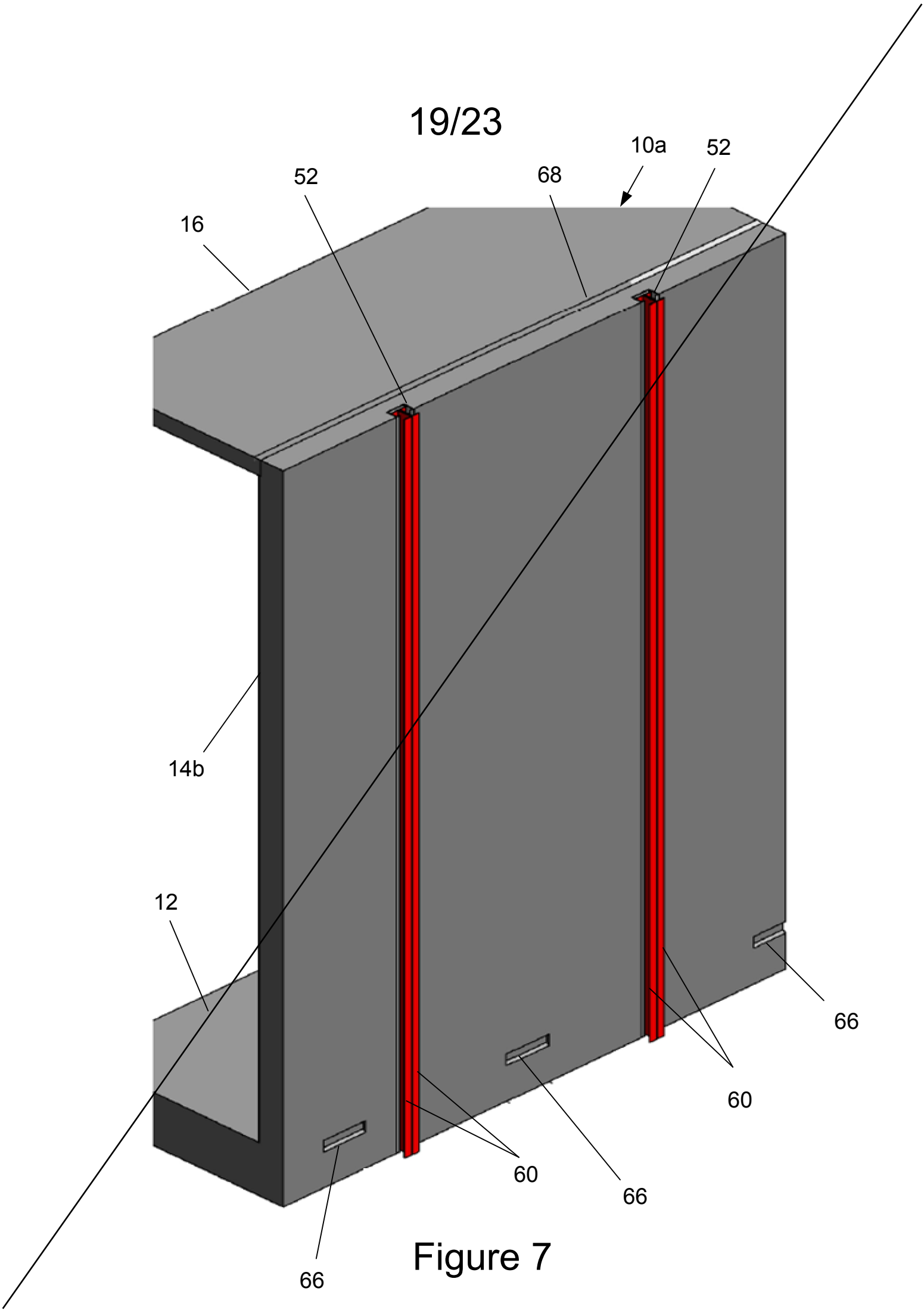

Figure 7

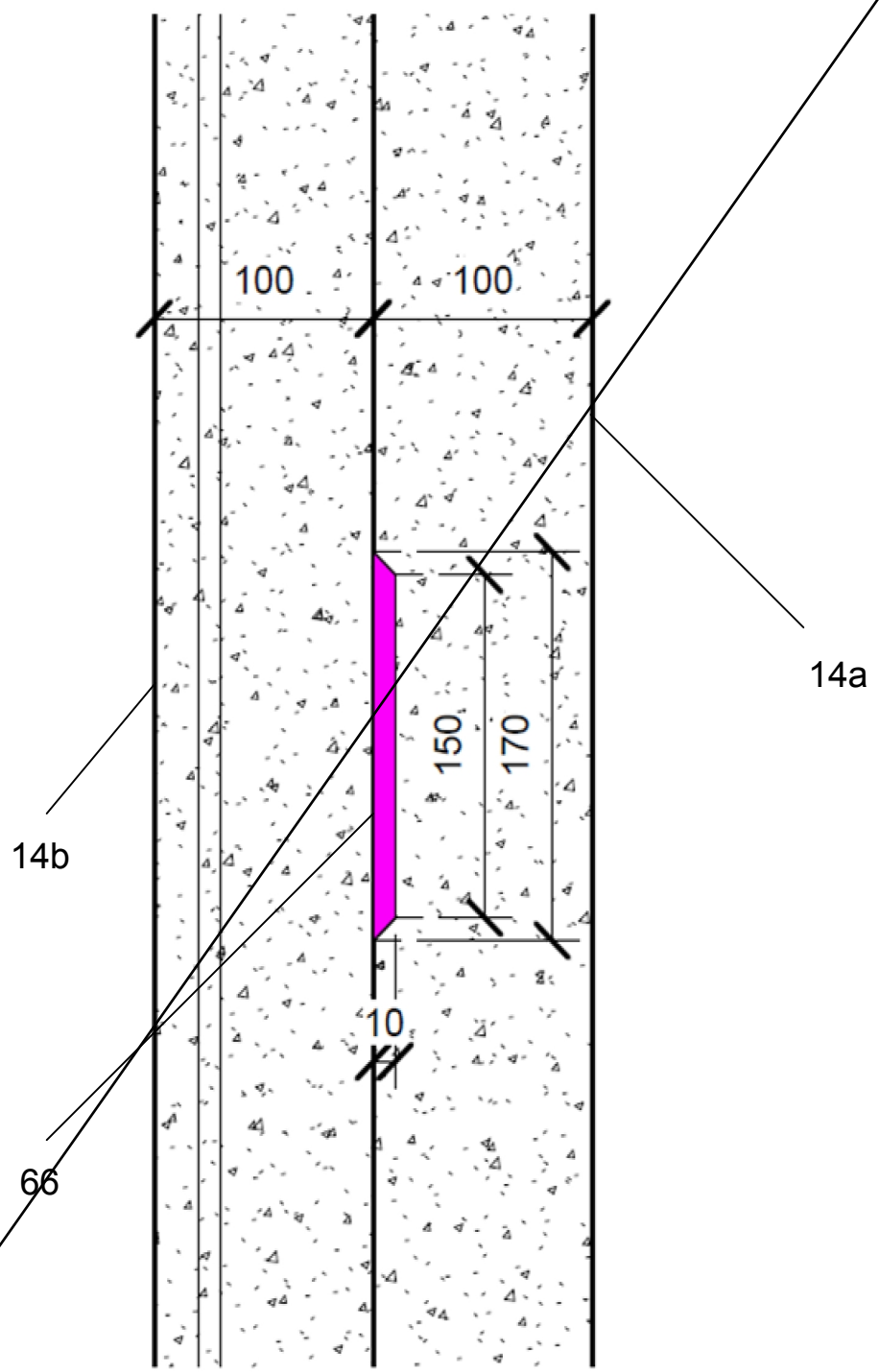

Figure 8

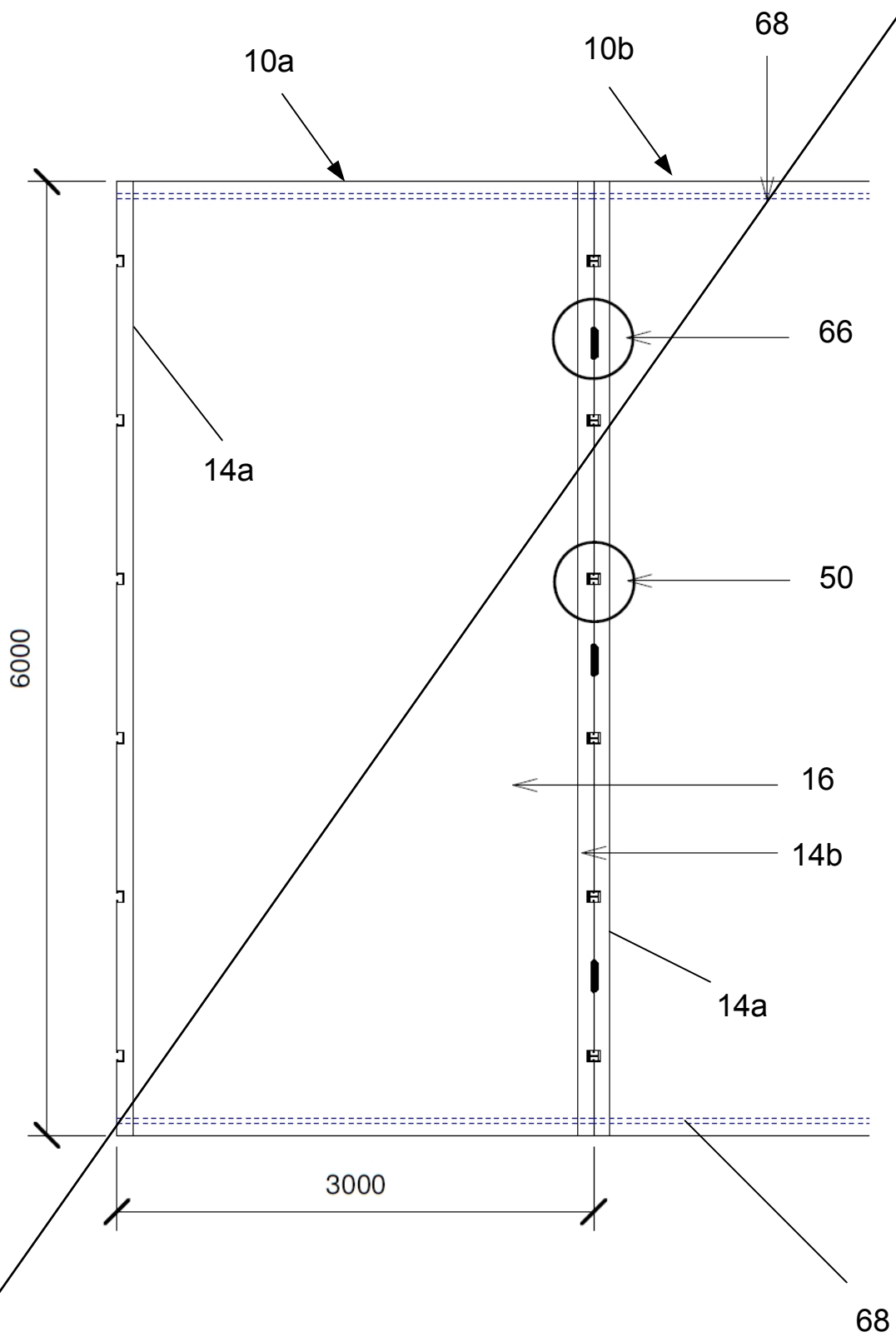

Figure 9

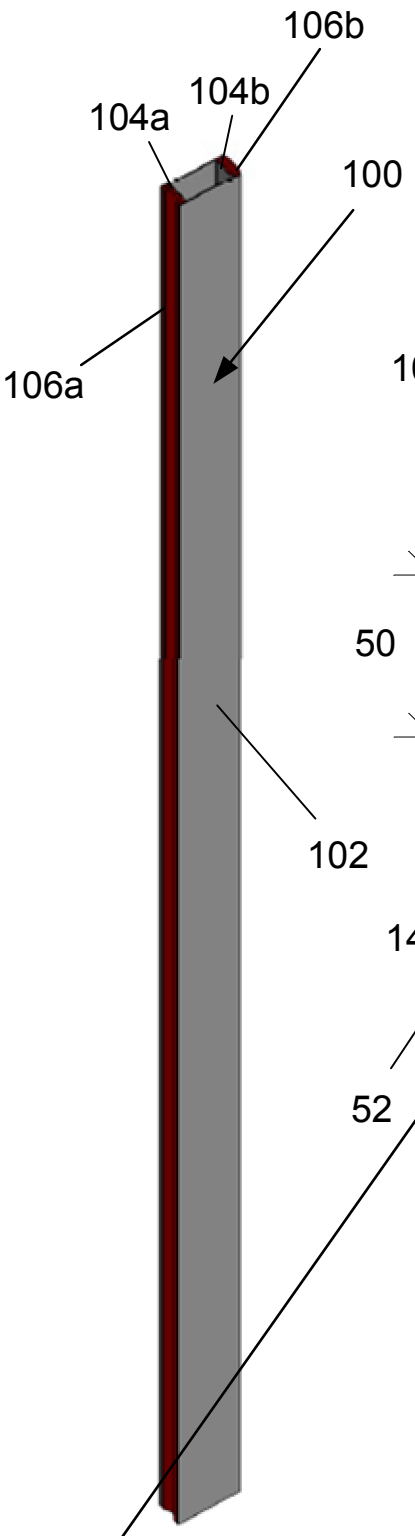

Figure 10a

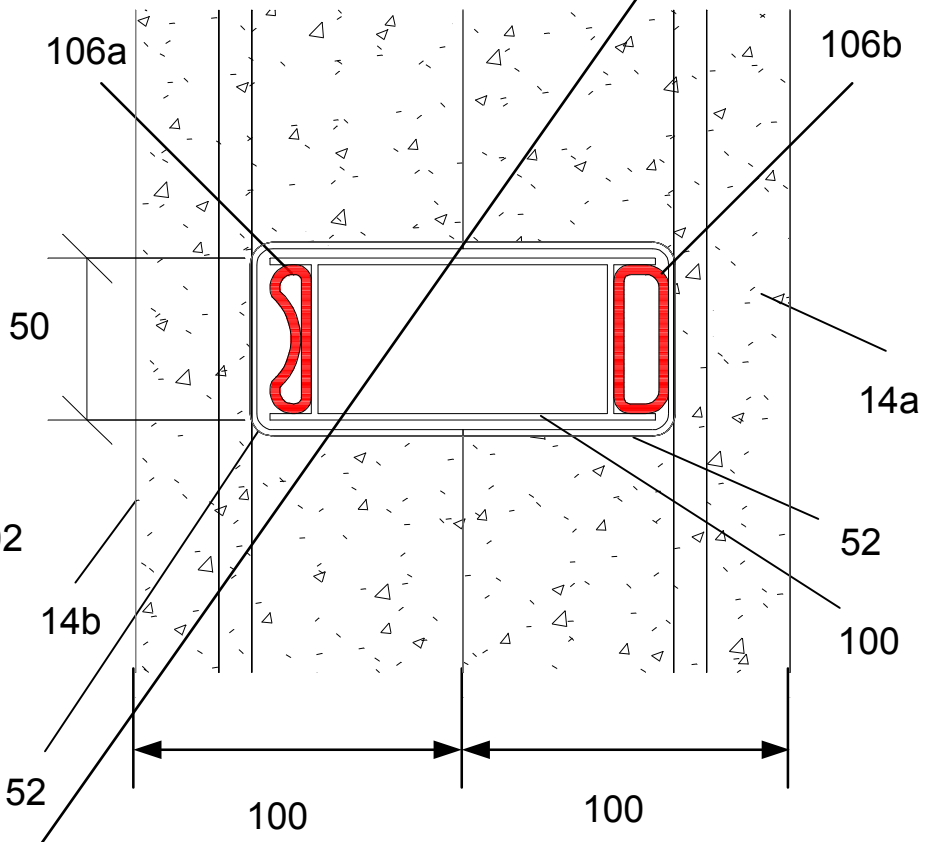

Figure 10b

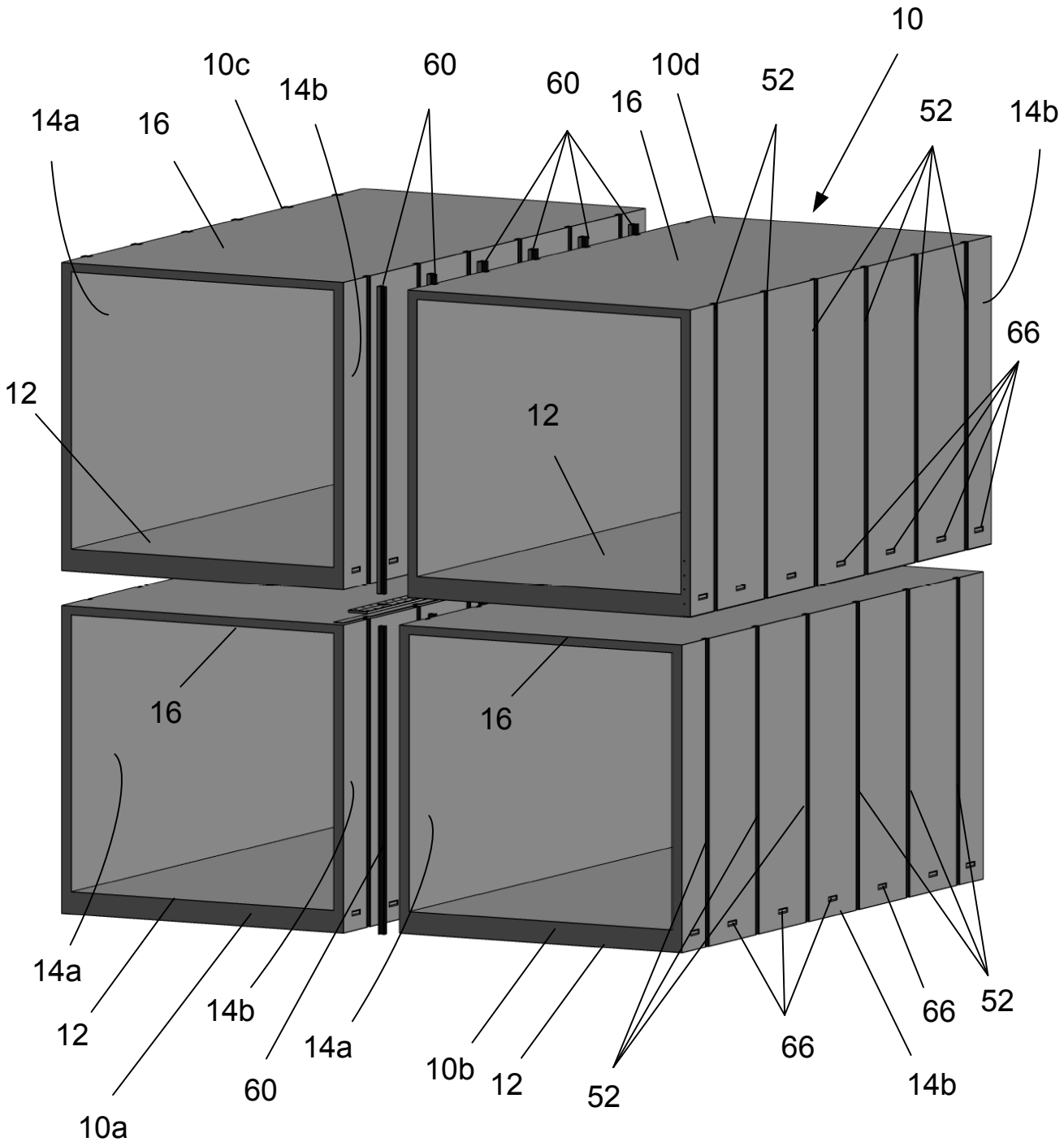
10
10c
14b
60
60
10d
52
16
52
14b
14a
16
66
12
12
16
16
14a
12
14b
14a
60
10a
10b
12
52
66
66
52
14b

Figure 1

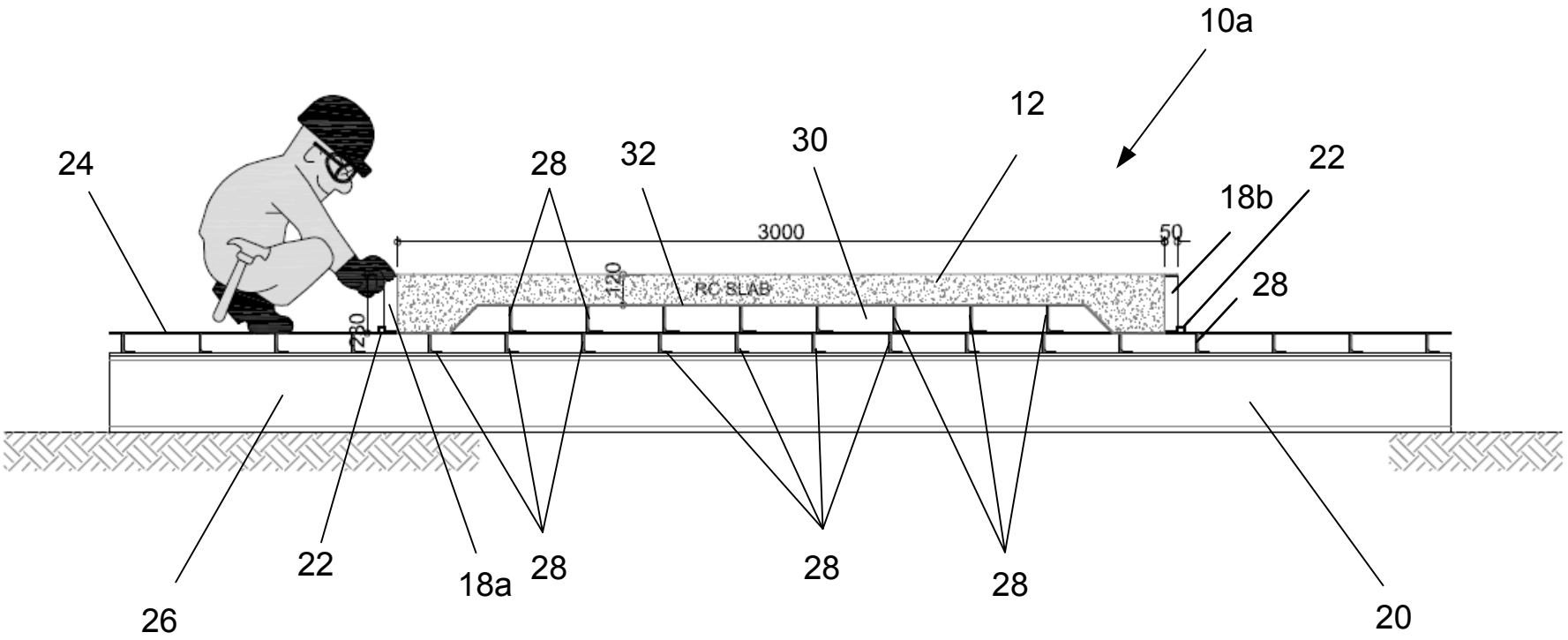
10a
12
24
28
32
30
22
18b
28
3000
50
1120
RC SLAB
280
22
18a
28
28
28
28
26
20

Figure 2a

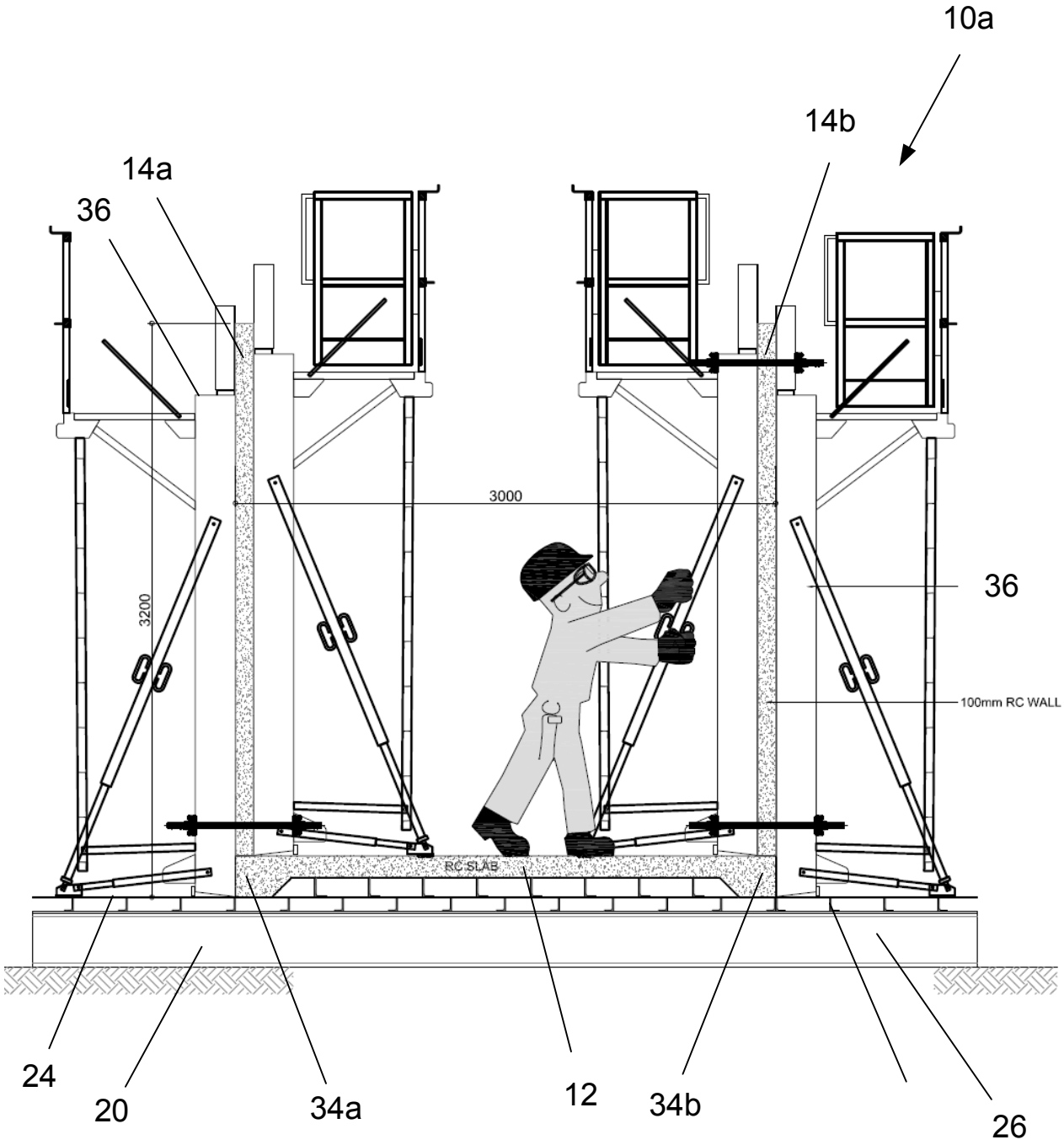
10a
14b
14a
36
3000
3200
36
100mm RC WALL
RC SLAB
24
20
34a
12
34b
26

Figure 2b

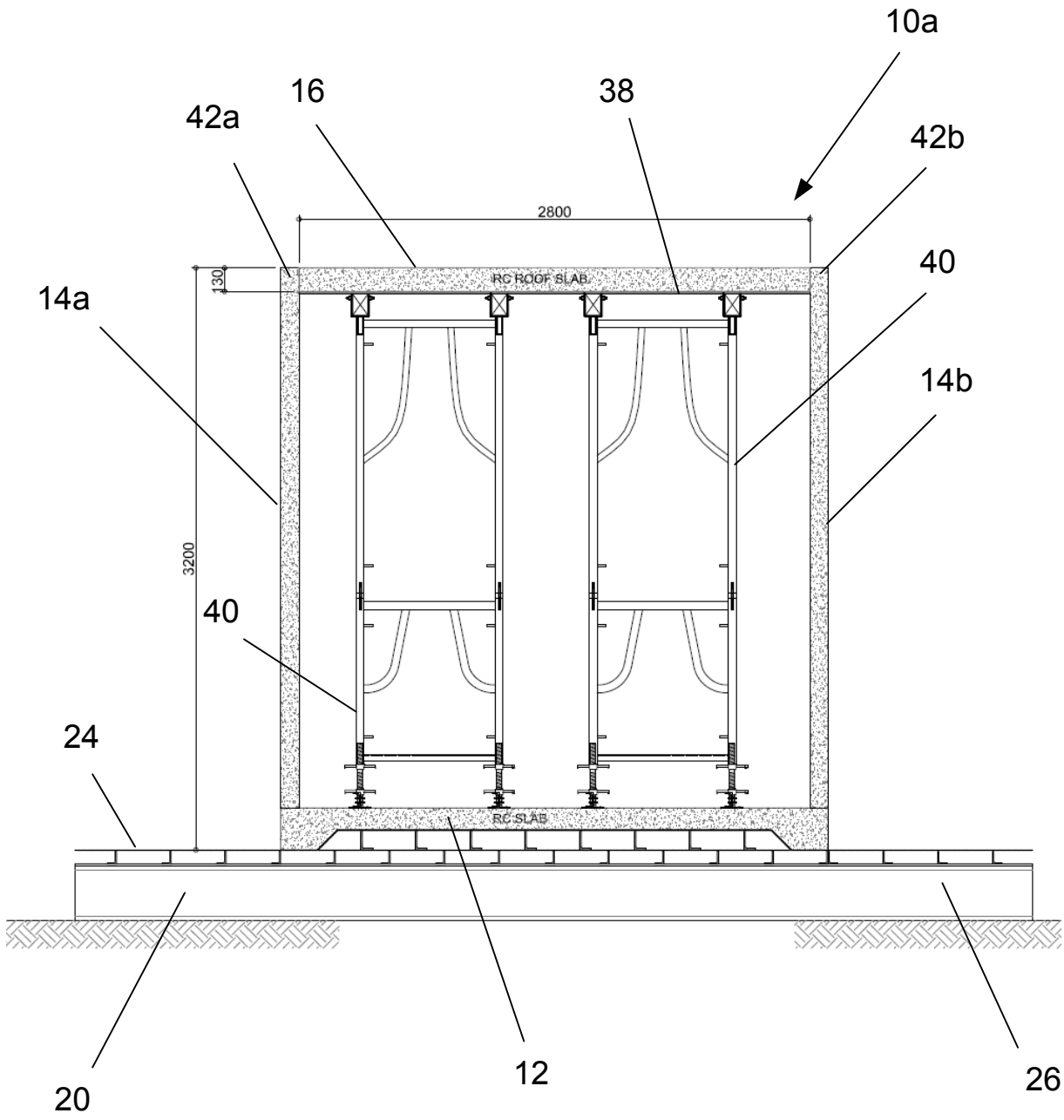
10a
16
38
42a
42b
2800
130
RC ROOF SLAB
40
14a
14b
3200
40
24
RC SLAB
20
12
26

Figure 2c

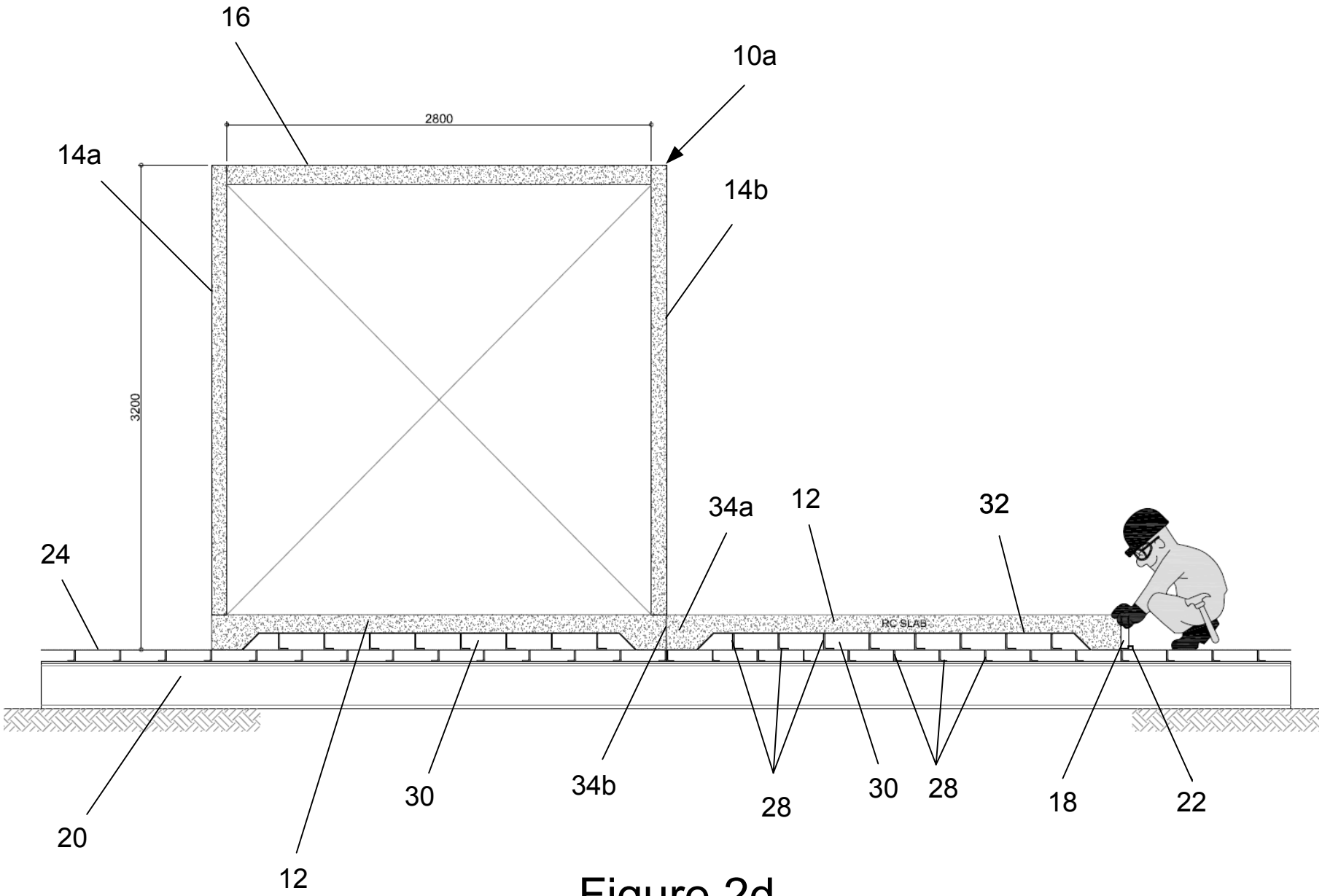
16
10a
2800
14a
14b
3200
34a
12
32
24
RC SLAB
20
12
30
34b
28
30
28
18
22

Figure 2d

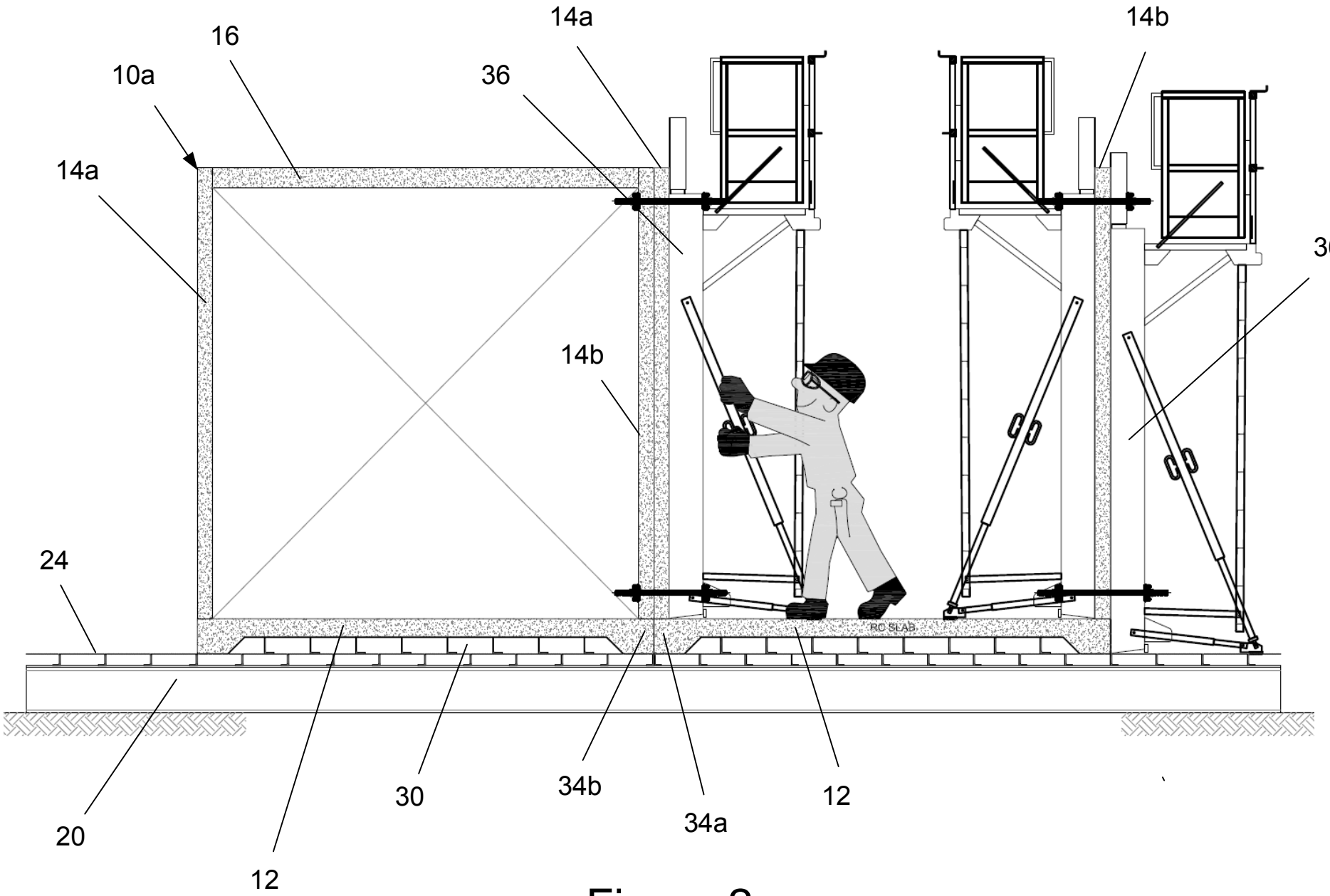

Figure 2e

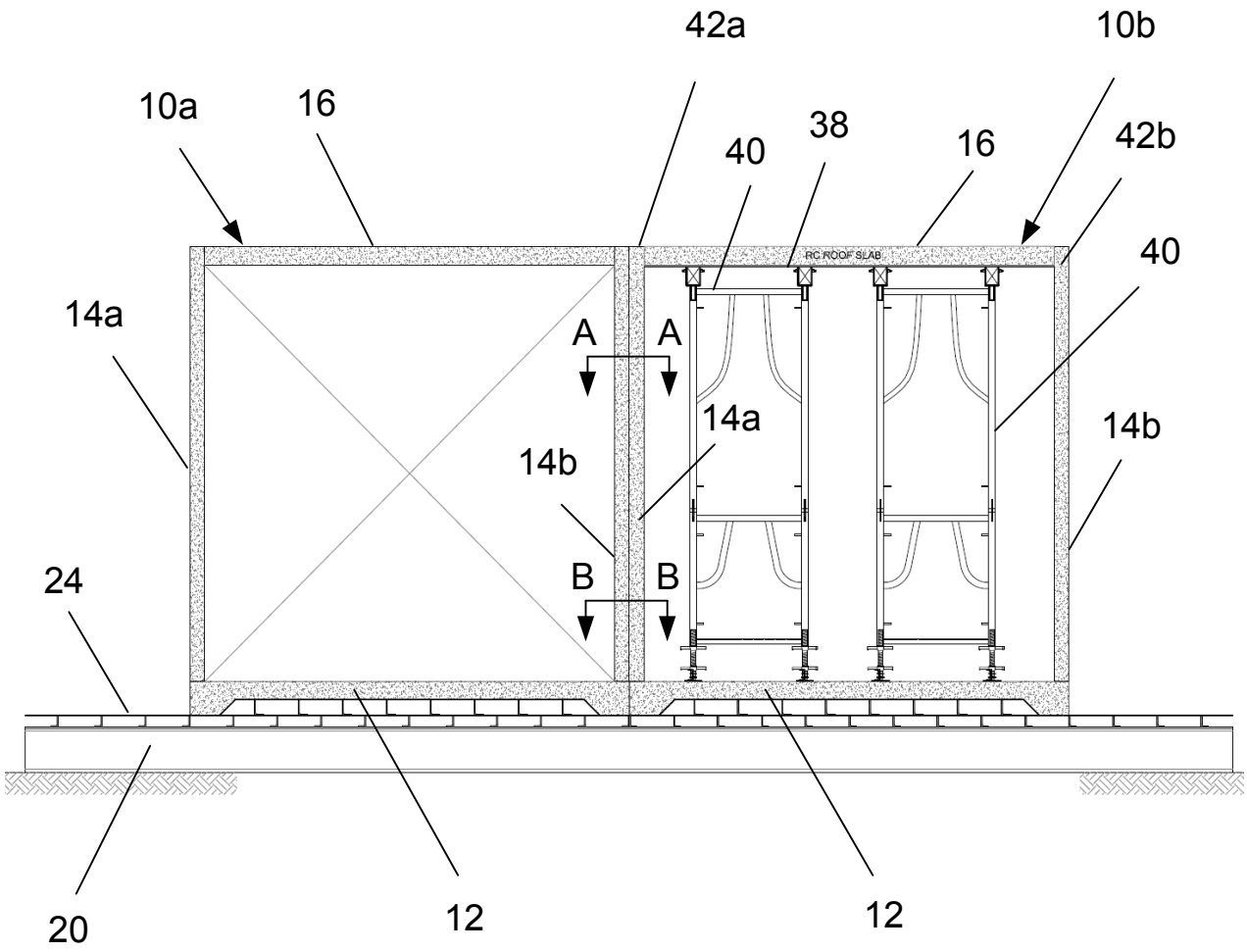
42a
10b
10a
16
40
38
16
42b
RC ROOF SLAB
40
14a
A
A
14a
14b
14b
B
B
24
20
12
12

Figure 2f

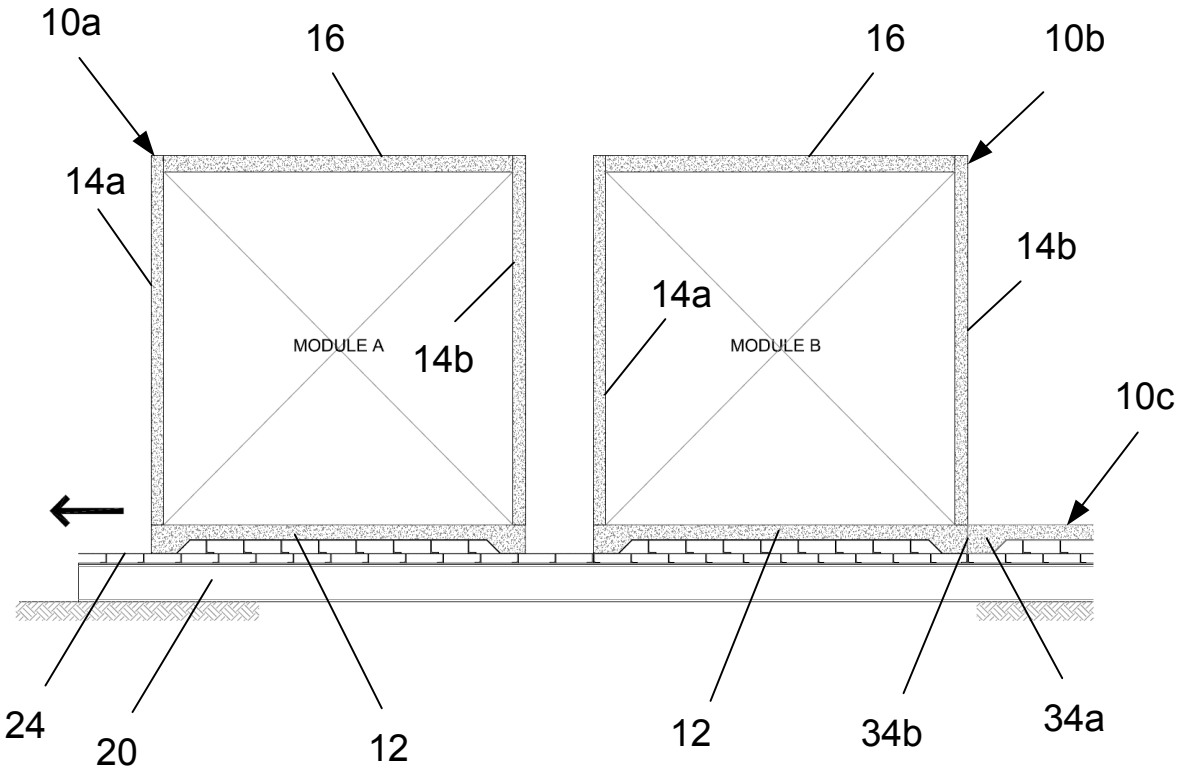
10a
16
16
10b
14a
14b
14a
MODULE A
14b
MODULE B
10c
24
20
12
12
34b
34a

Figure 2g

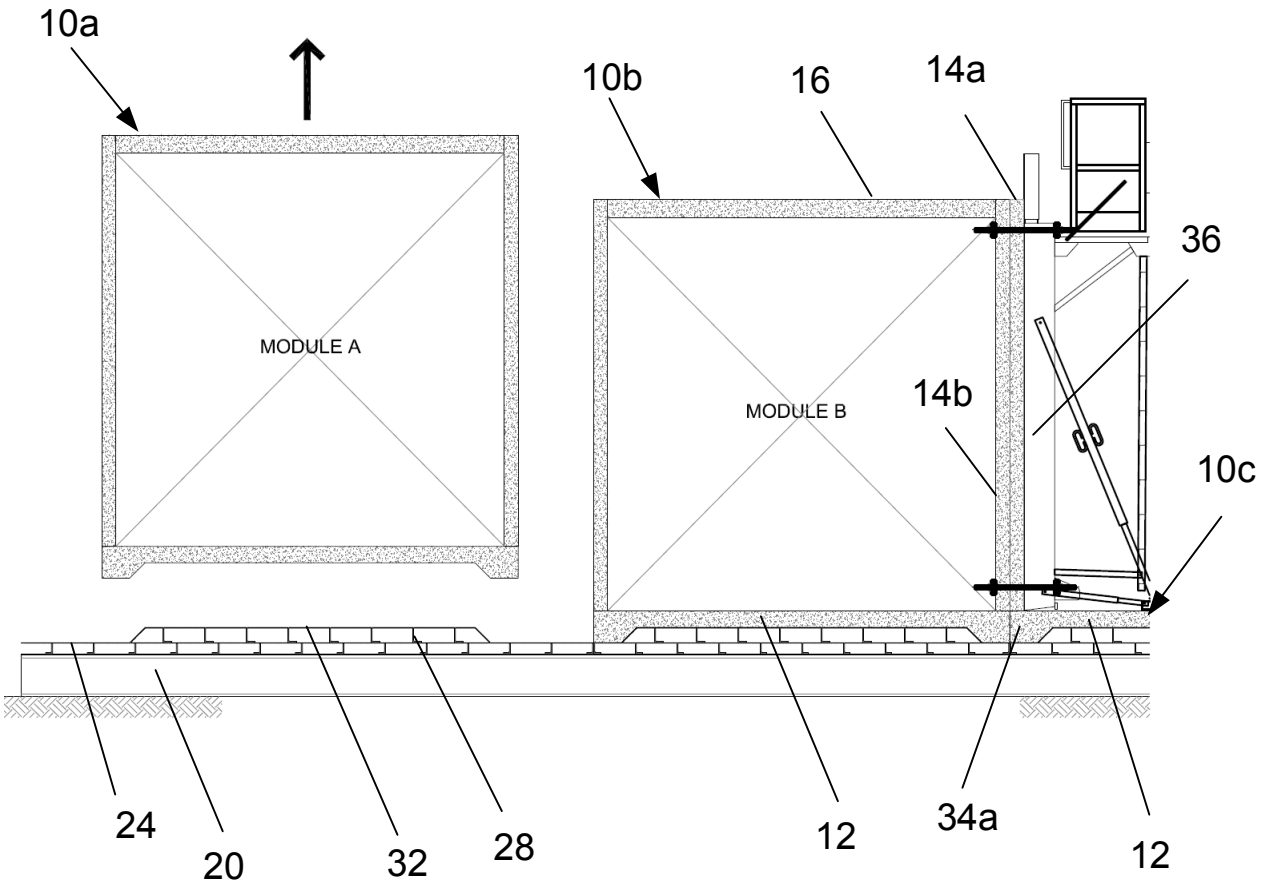

Figure 2h

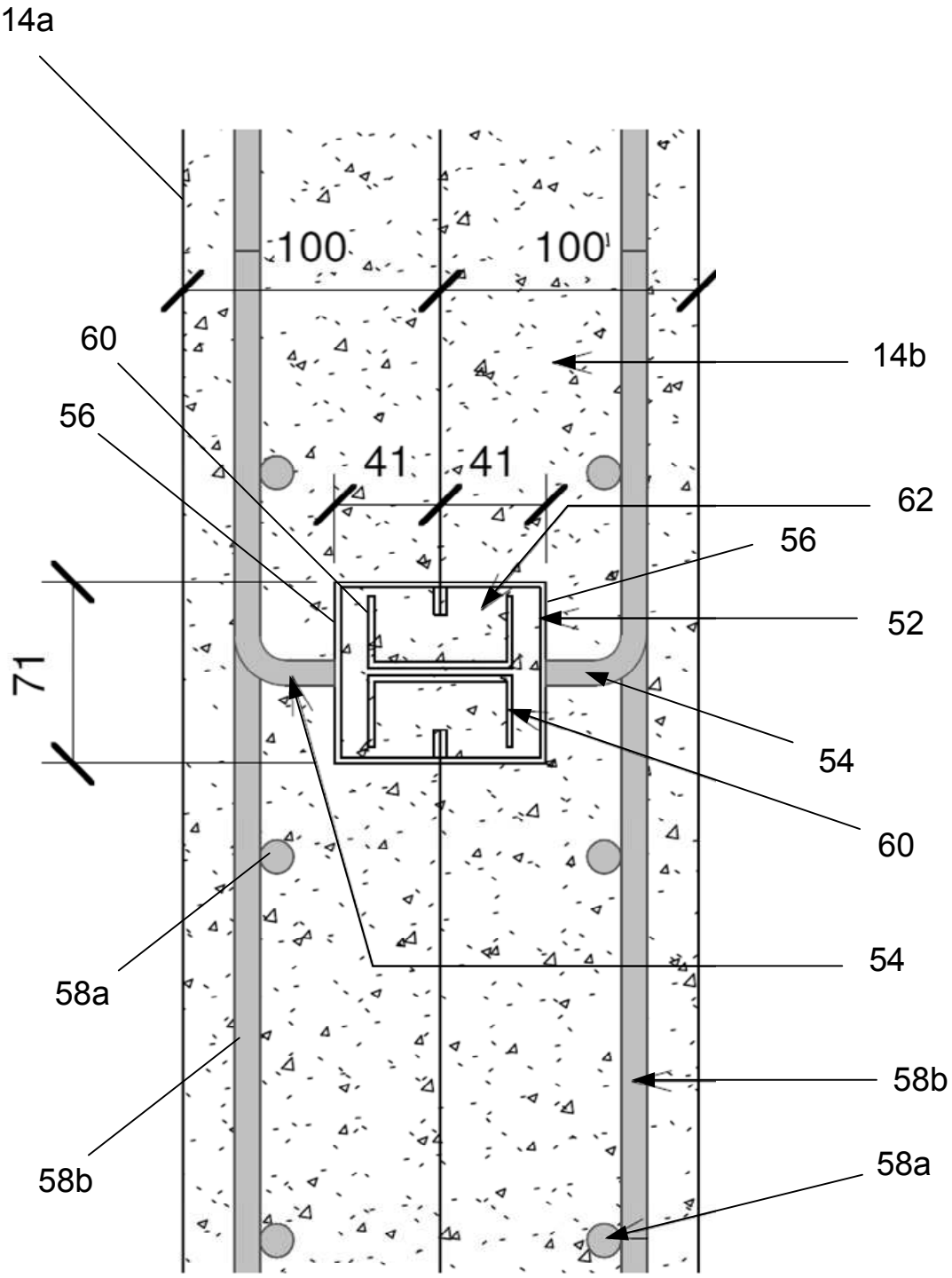

Figure 4a

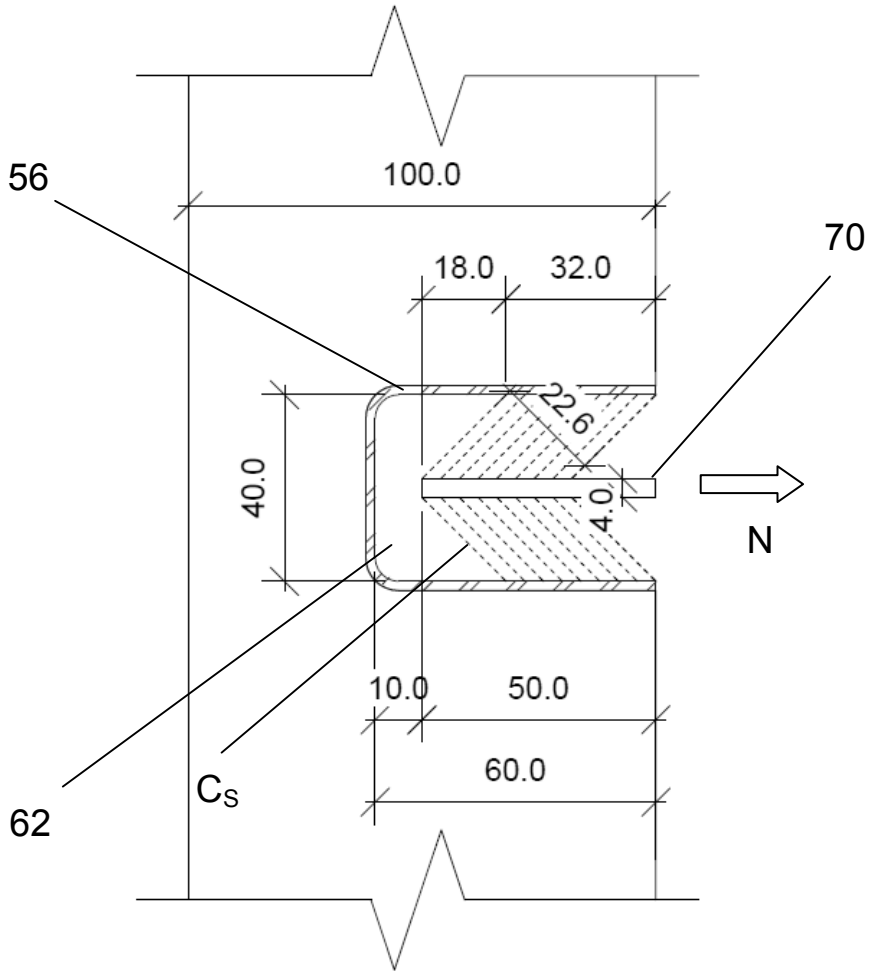

Figure 4d

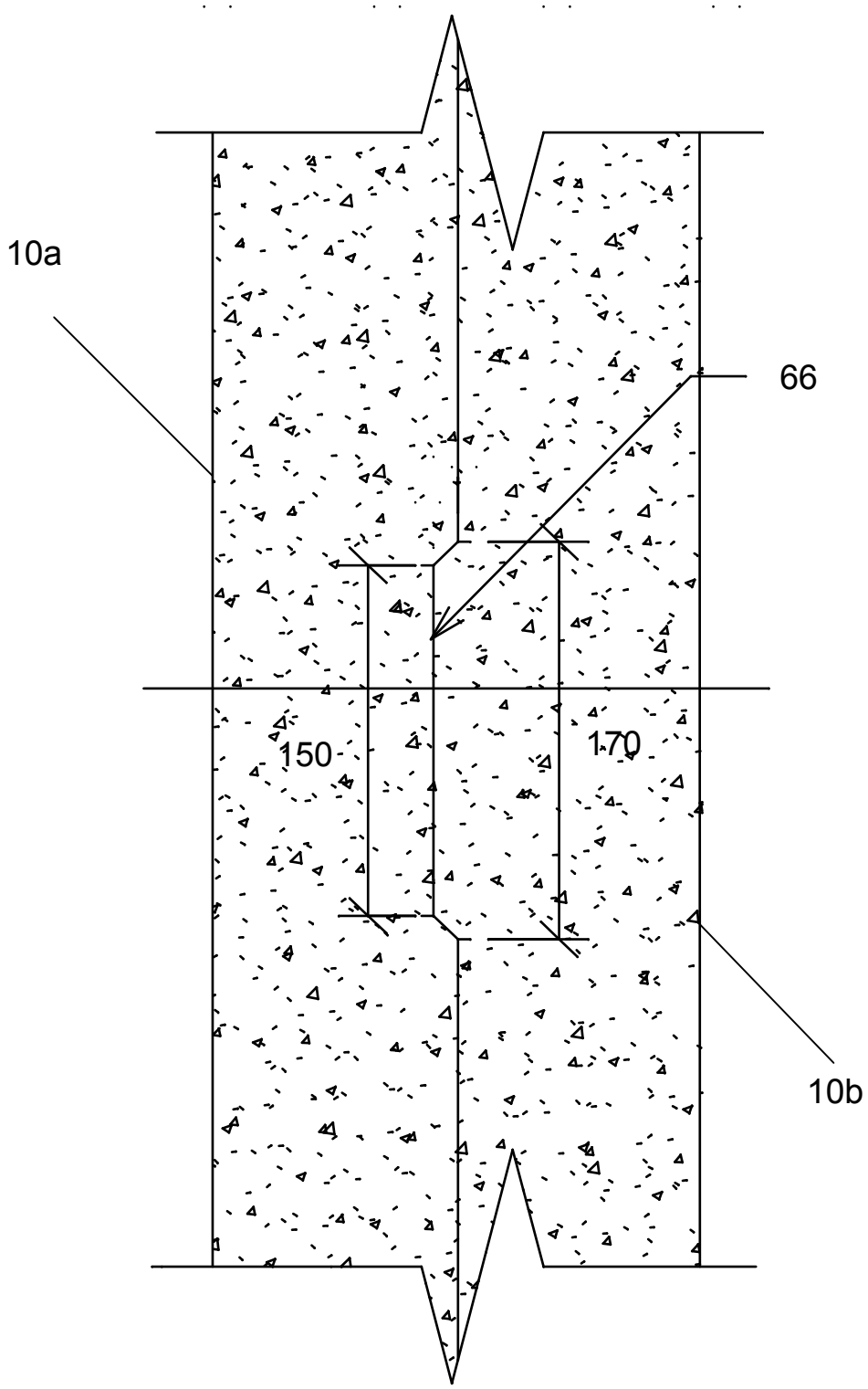

Figure 4e

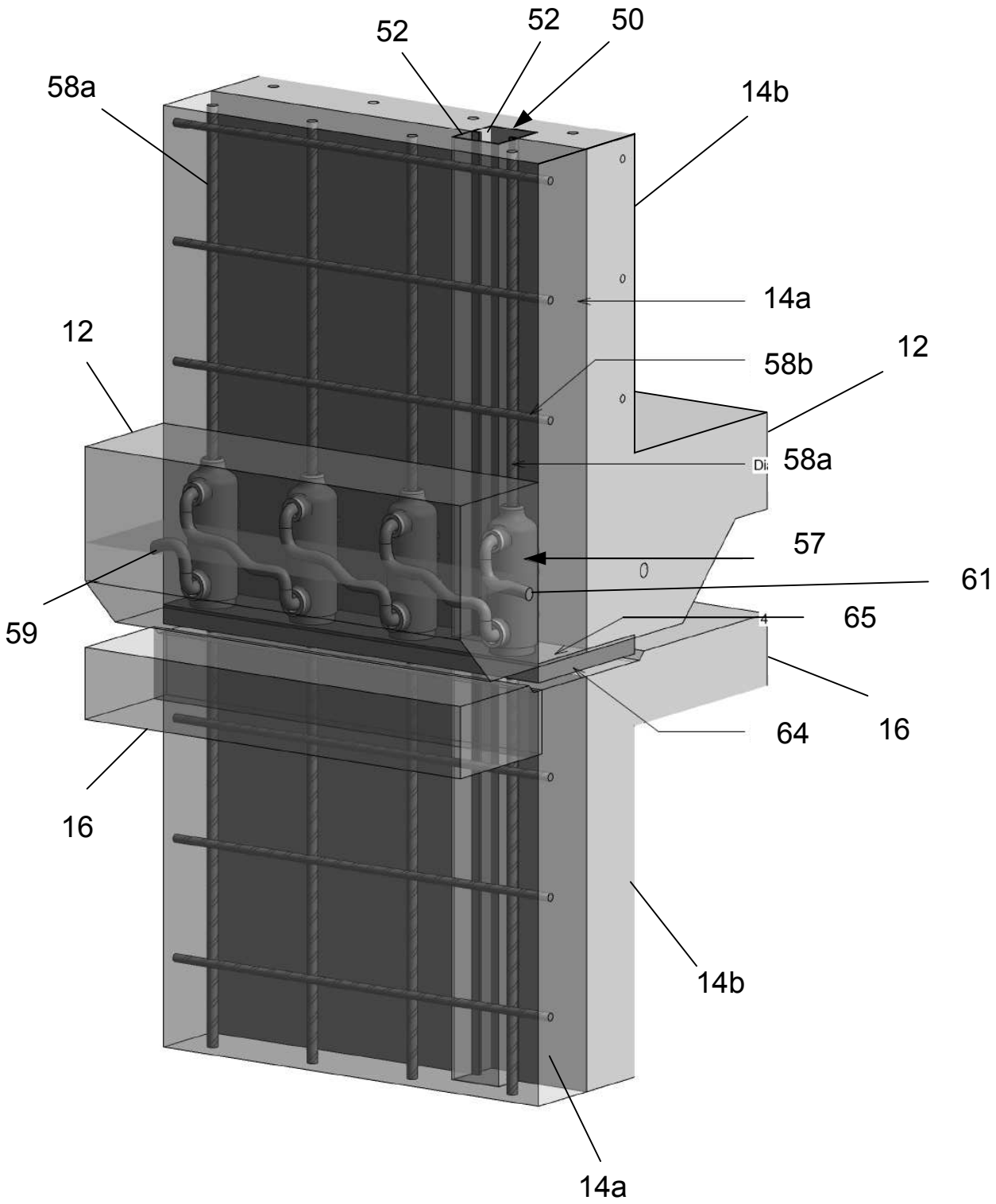

Figure 5a

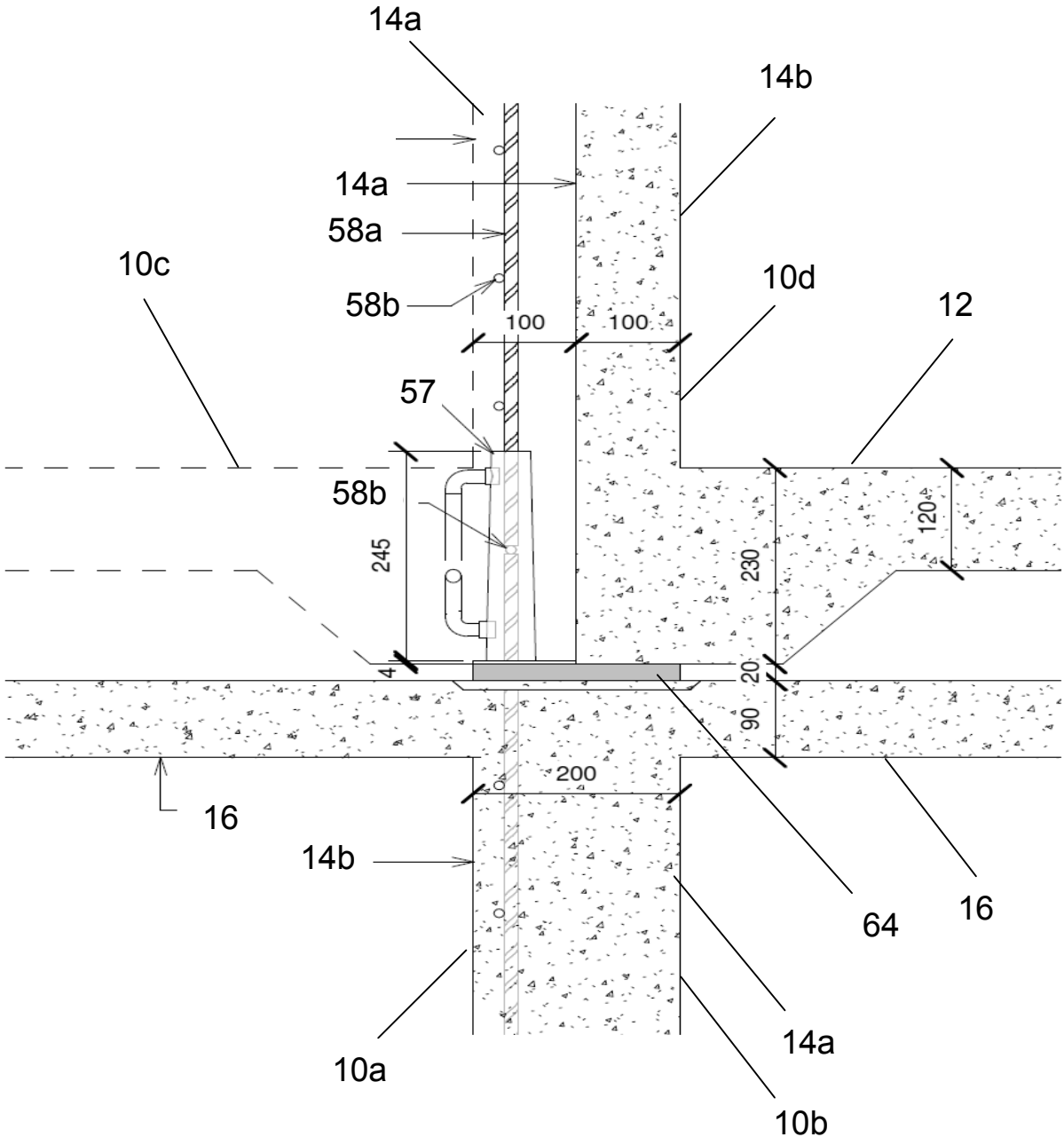
14a
14b
14a
58a
10c
58b
10d
12
100
100
57
58b
245
230
120
4
20
90
200
16
14b
64
16
14a
10a
10b

Figure 6

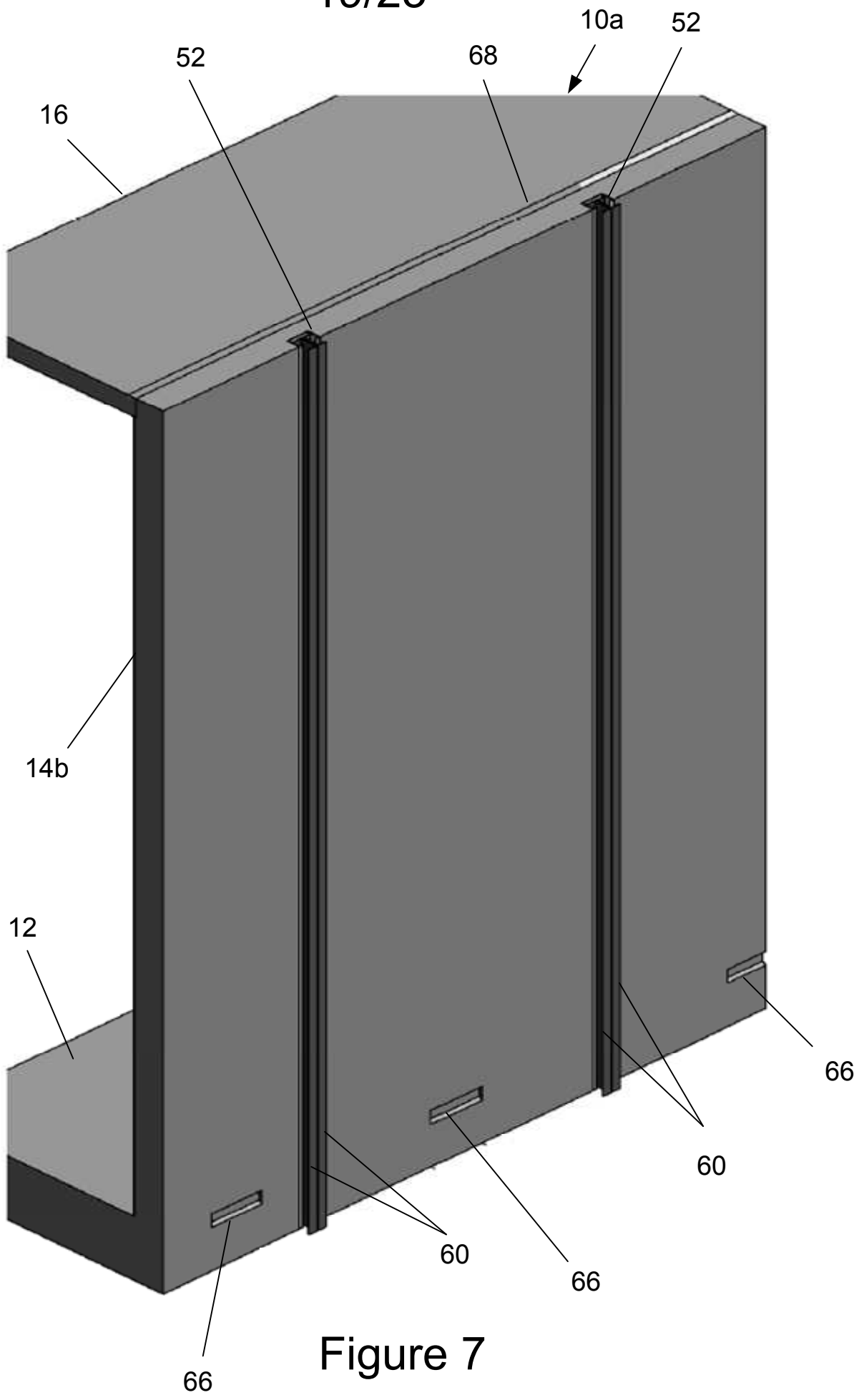

Figure 7

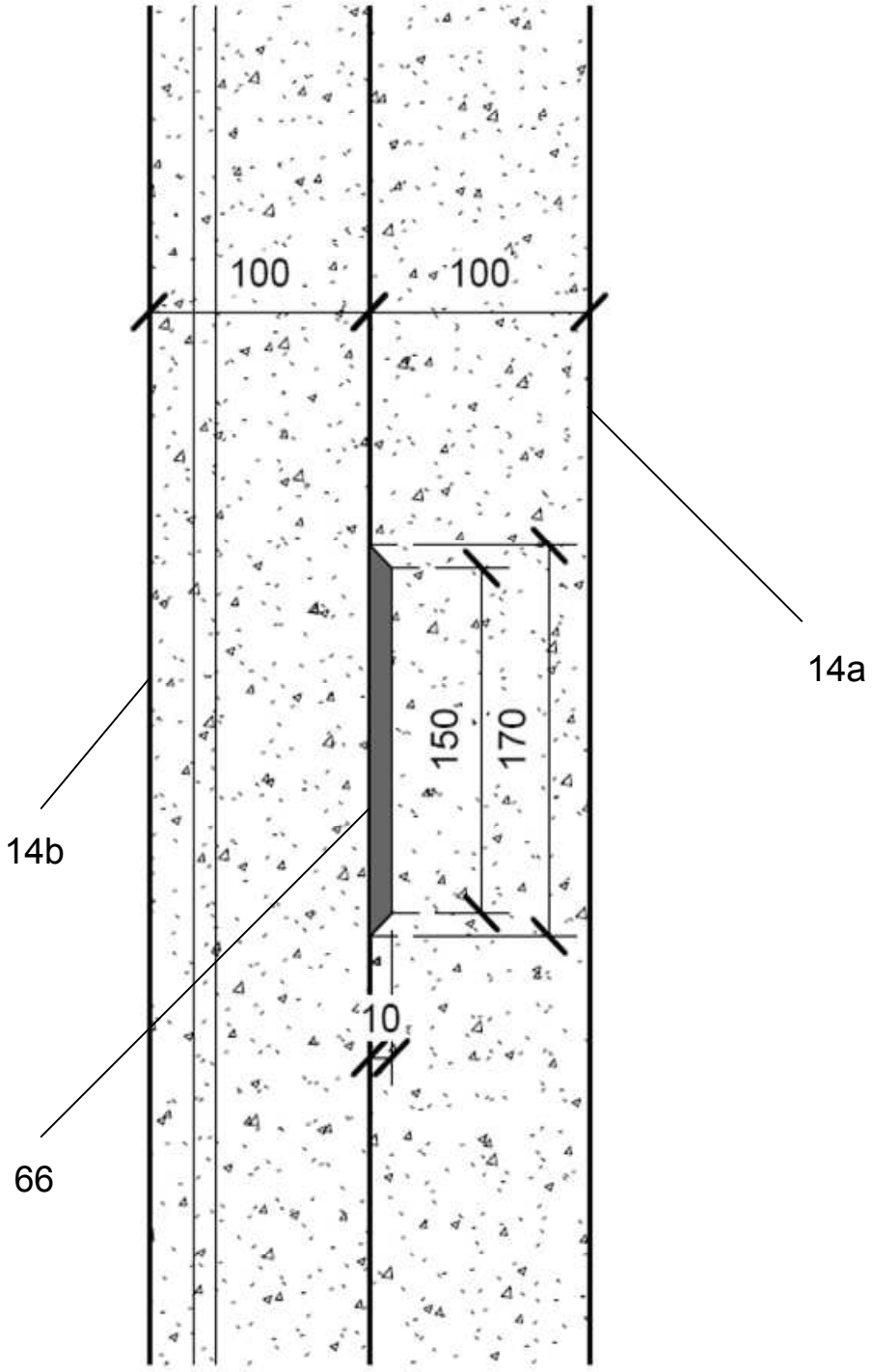

Figure 8

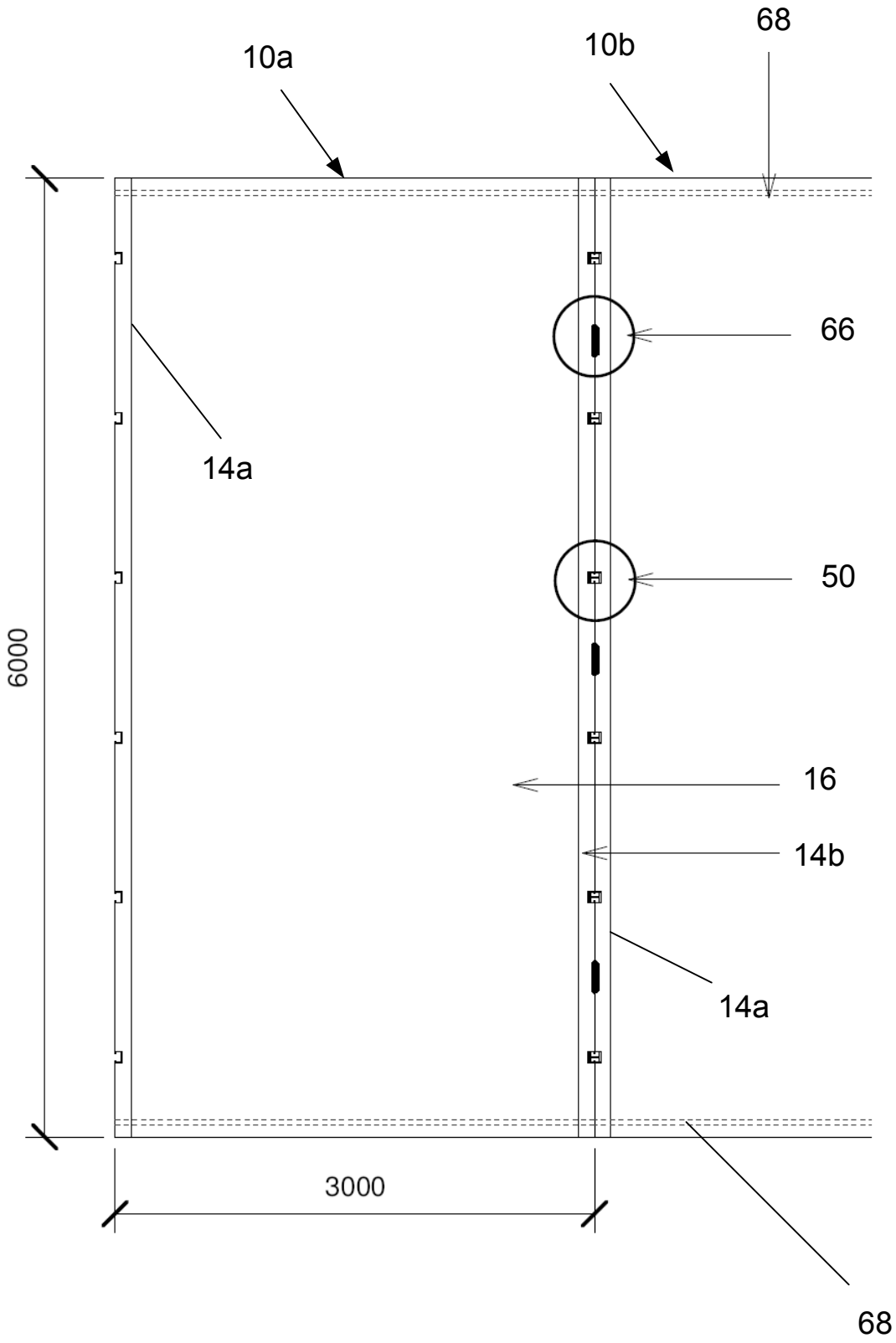

Figure 9

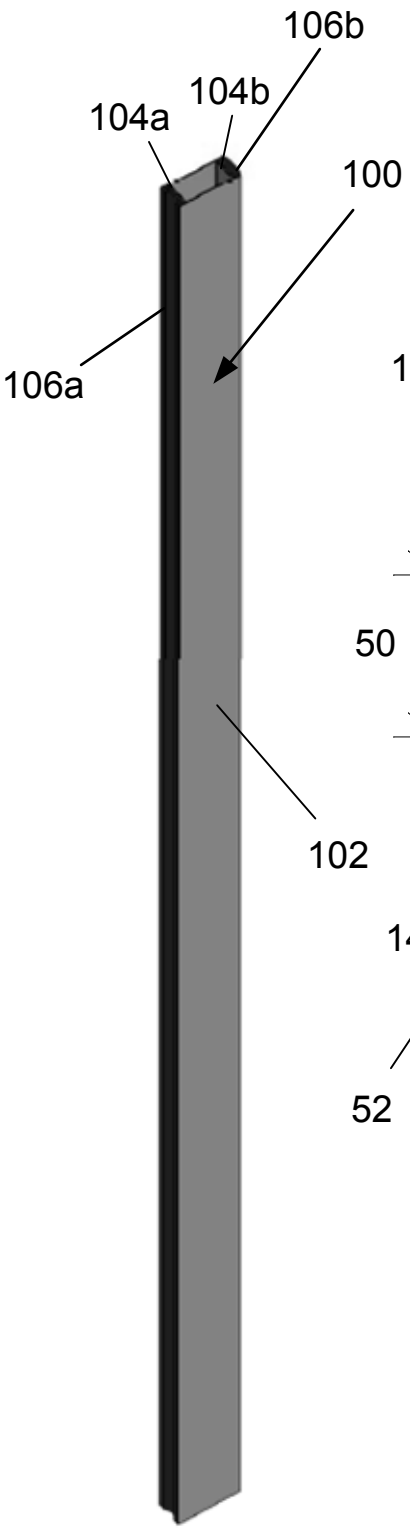

Figure 10a

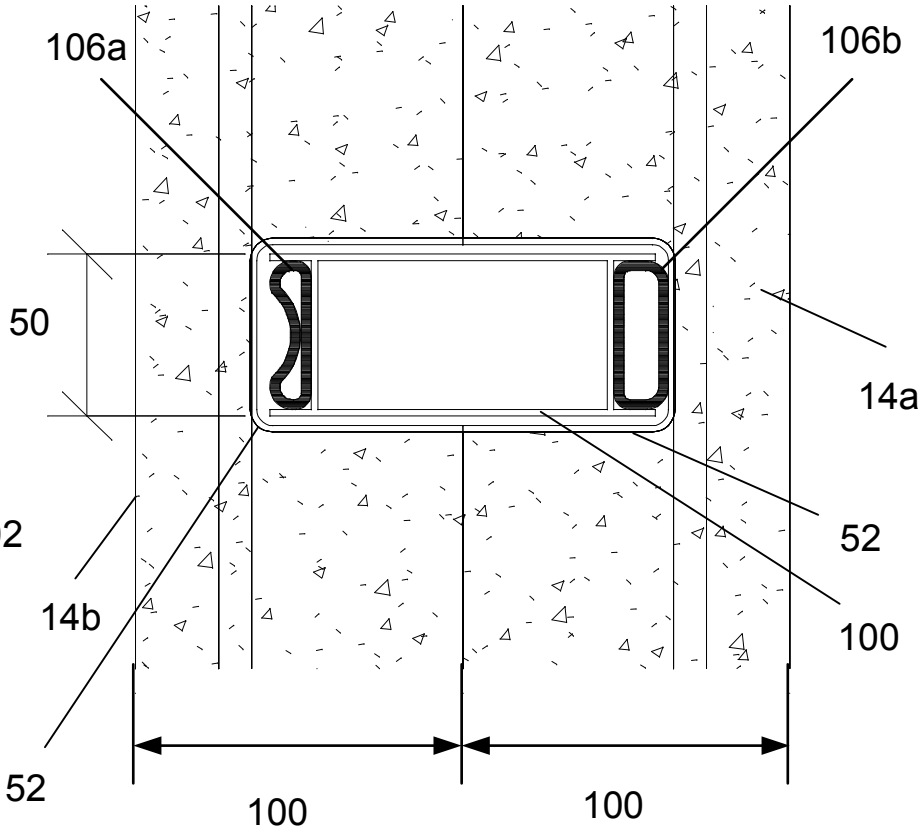

Figure 10b