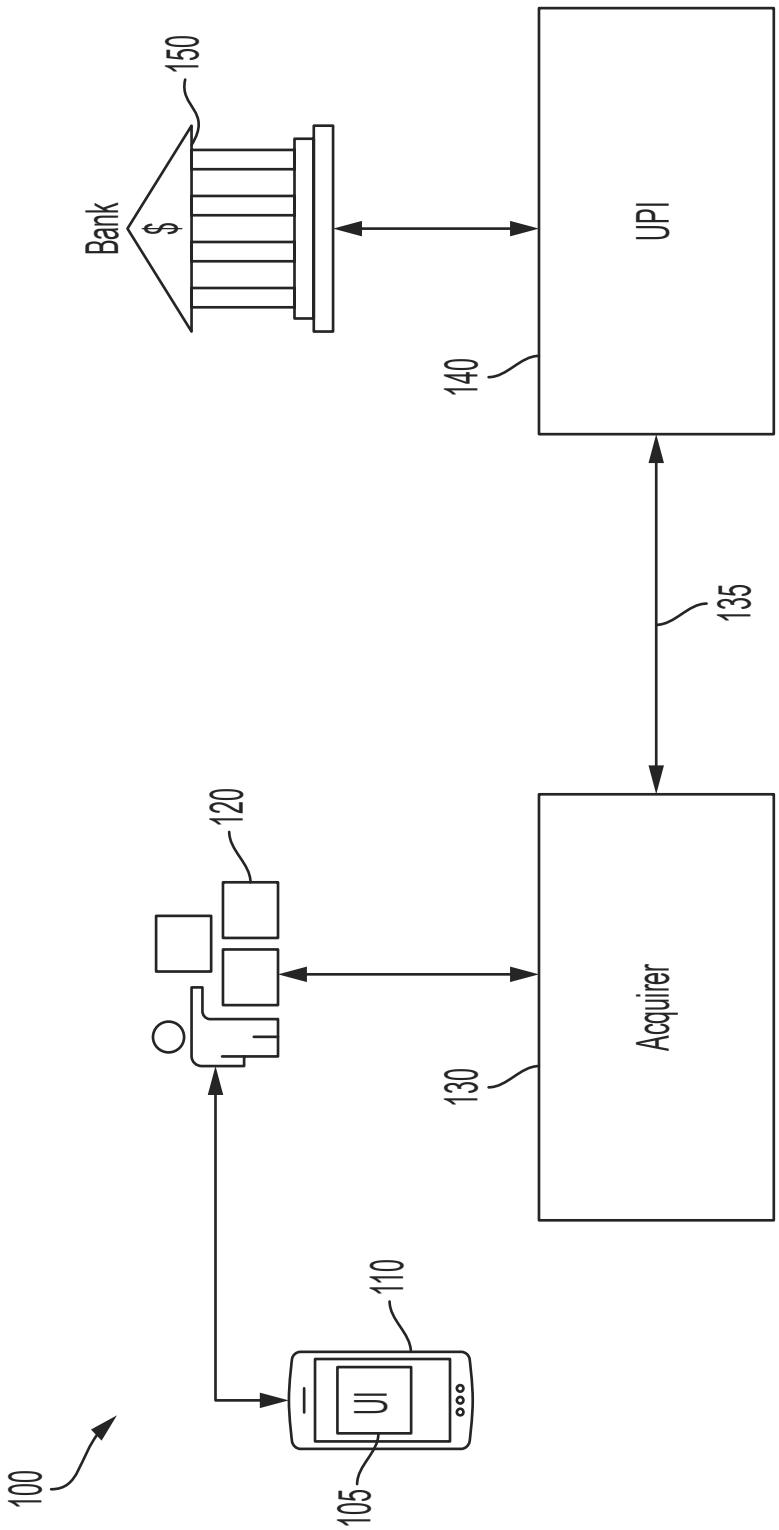

FIG. 1

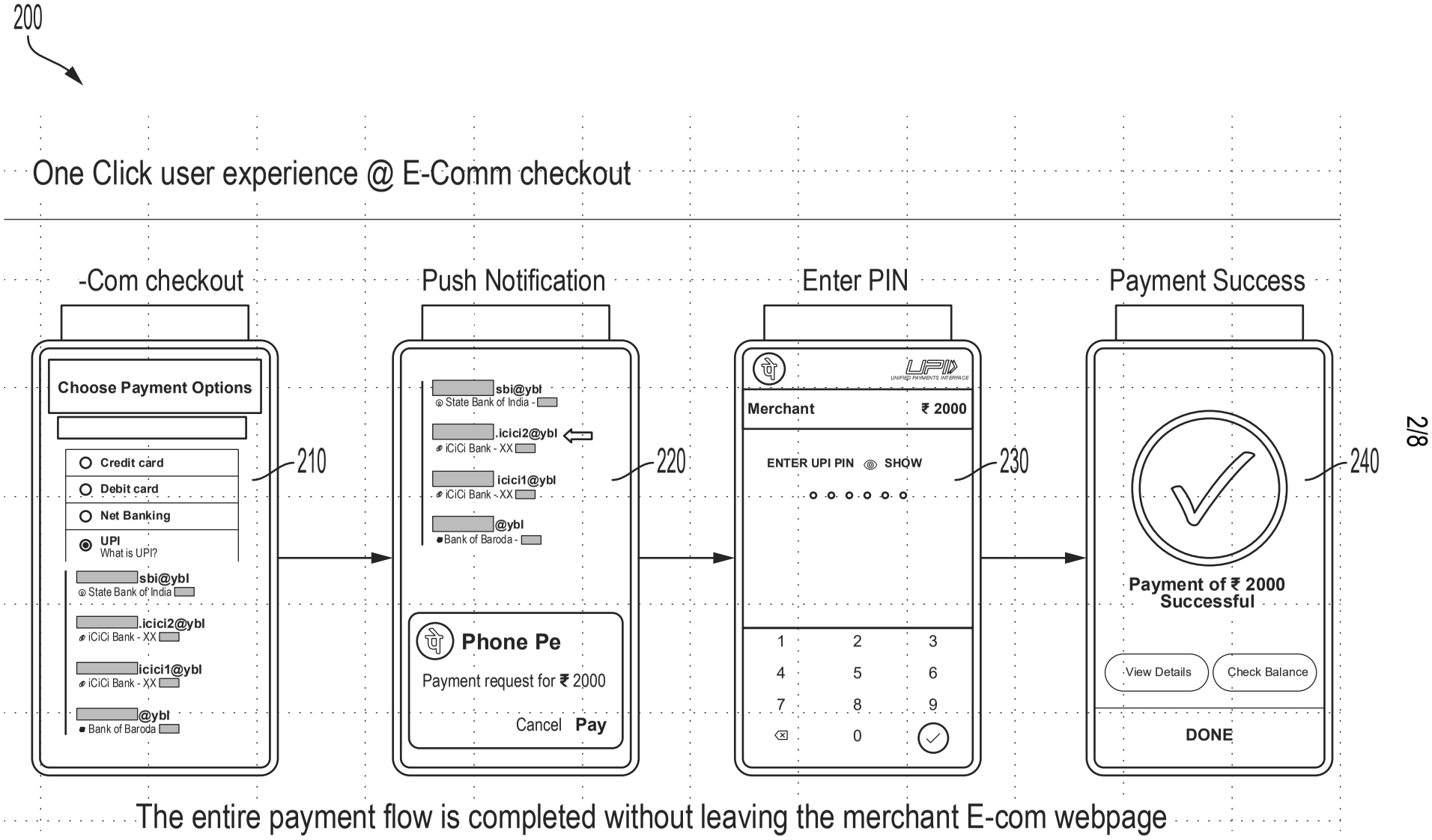
200
One Click user experience @ E-Comm checkout
-Com checkout
Push Notification
Enter PIN
Payment Success
Choose Payment Options
Credit card
Debit card
Net Banking
UPI
What is UPI?
sbi@ybl
State Bank of India
.icici2@ybl
iCiCi Bank - XX
icici1@ybl
iCiCi Bank - XX
@ybl
Bank of Baroda
210
sbi@ybl
State Bank of India -
.icici2@ybl
iCiCi Bank - XX
icici1@ybl
iCiCi Bank - XX
@ybl
Bank of Baroda -
Phone Pe
Payment request for ₹ 2000
Cancel
Pay
220
UPI
UNIFIED PAYMENTS INTERFACE
Merchant
₹ 2000
ENTER UPI PIN
SHOW
1 2 3
4 5 6
7 8 9
0
230
Payment of ₹ 2000
Successful
View Details
Check Balance
DONE
240
The entire payment flow is completed without leaving the merchant E-com webpage

FIG. 2

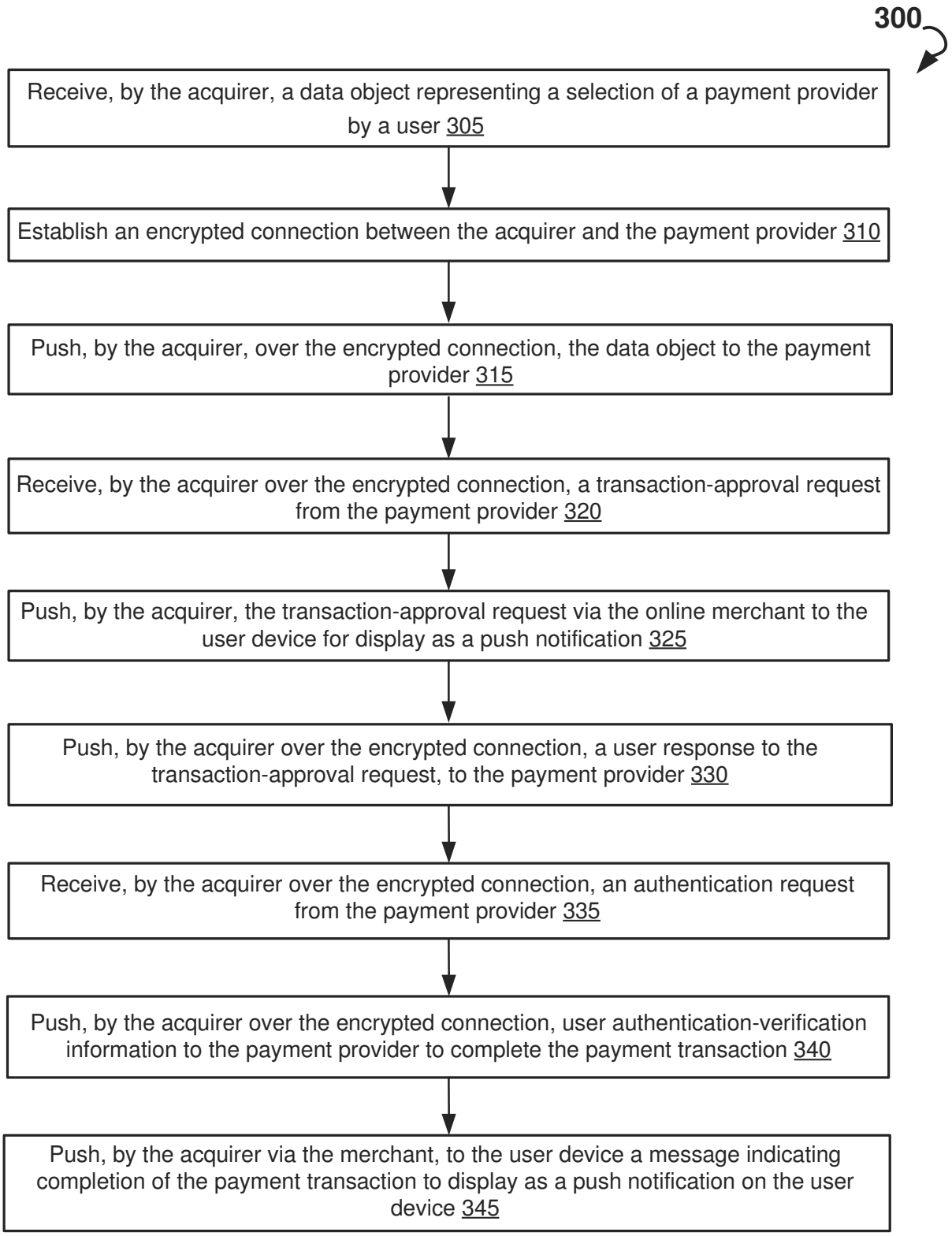
300
Receive, by the acquirer, a data object representing a selection of a payment provider by a user 305
Establish an encrypted connection between the acquirer and the payment provider 310
Push, by the acquirer, over the encrypted connection, the data object to the payment provider 315
Receive, by the acquirer over the encrypted connection, a transaction-approval request from the payment provider 320
Push, by the acquirer, the transaction-approval request via the online merchant to the user device for display as a push notification 325
Push, by the acquirer over the encrypted connection, a user response to the transaction-approval request, to the payment provider 330
Receive, by the acquirer over the encrypted connection, an authentication request from the payment provider 335
Push, by the acquirer over the encrypted connection, user authentication-verification information to the payment provider to complete the payment transaction 340
Push, by the acquirer via the merchant, to the user device a message indicating completion of the payment transaction to display as a push notification on the user device 345

FIG. 3

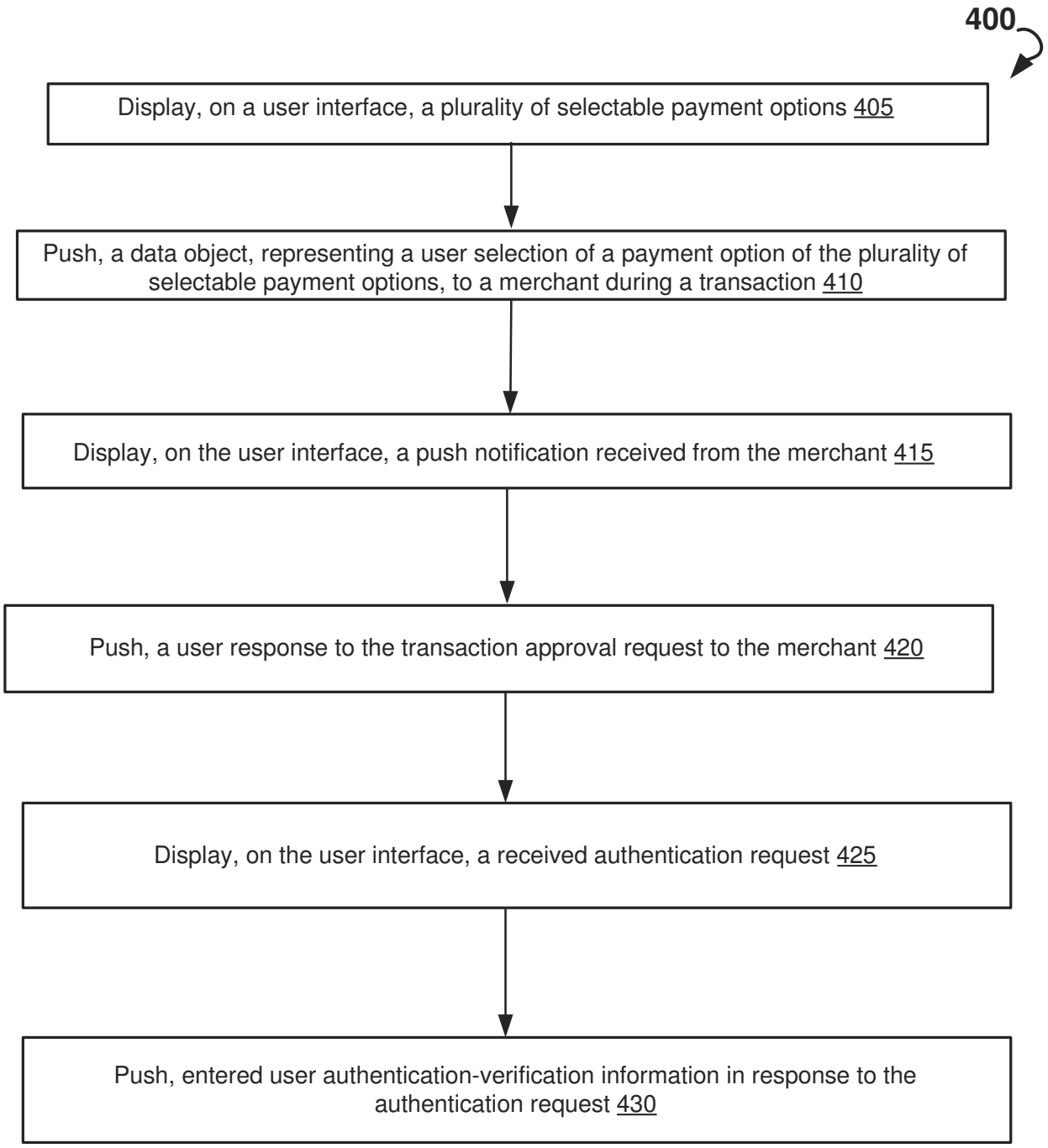
400
Display, on a user interface, a plurality of selectable payment options 405
Push, a data object, representing a user selection of a payment option of the plurality of selectable payment options, to a merchant during a transaction 410
Display, on the user interface, a push notification received from the merchant 415
Push, a user response to the transaction approval request to the merchant 420
Display, on the user interface, a received authentication request 425
Push, entered user authentication-verification information in response to the authentication request 430

FIG. 4

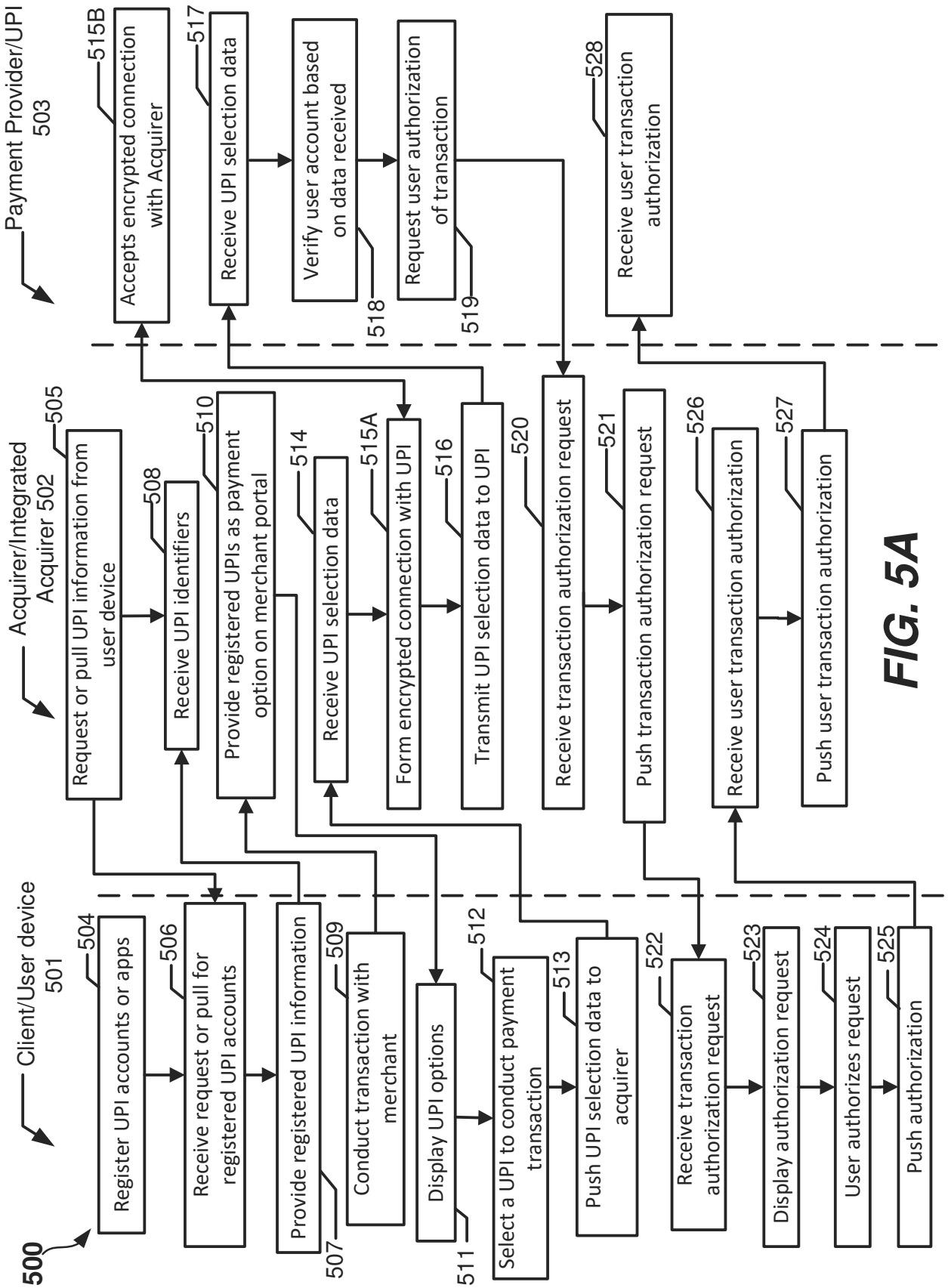
500
Client/User device 501
Register UPI accounts or apps
504
Receive request or pull for registered UPI accounts
506
Provide registered UPI information
507
Conduct transaction with merchant
509
Display UPI options
511
Select a UPI to conduct payment transaction
512
Push UPI selection data to acquirer
513
Receive transaction authorization request
522
Display authorization request
523
User authorizes request
524
Push authorization
525
Acquirer/Integrated Acquirer 502
Request or pull UPI information from user device
505
Receive UPI identifiers
508
Provide registered UPIs as payment option on merchant portal
510
Receive UPI selection data
514
Form encrypted connection with UPI
515A
Transmit UPI selection data to UPI
516
Receive transaction authorization request
520
Push transaction authorization request
521
Receive user transaction authorization
526
Push user transaction authorization
527
Payment Provider/UPI 503
Accepts encrypted connection with Acquirer
515B
Receive UPI selection data
517
Verify user account based on data received
518
Request user authorization of transaction
519
Receive user transaction authorization
528

FIG. 5A

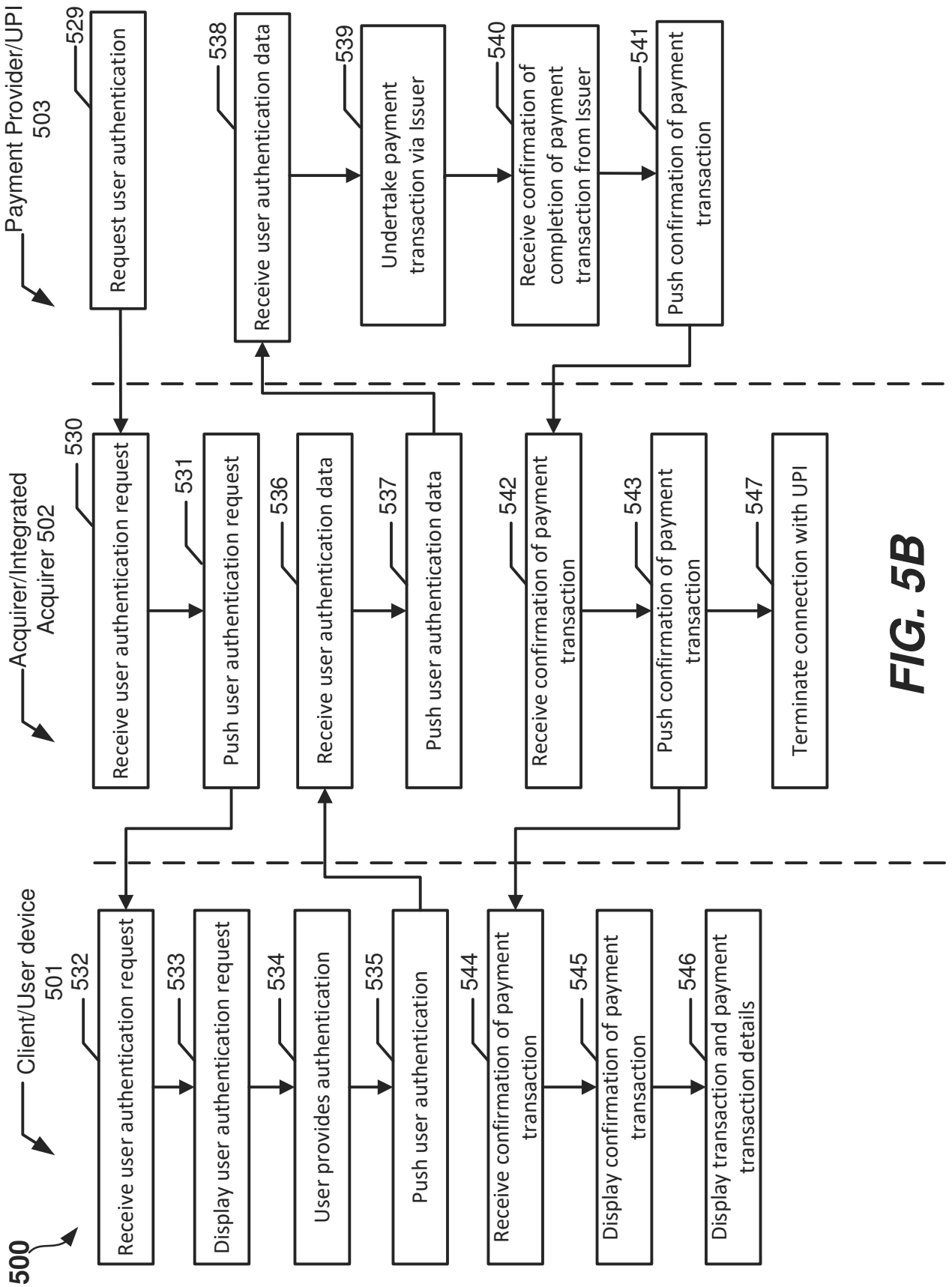
500
Client/User device
501
Acquirer/Integrated
Acquirer 502
Payment Provider/UPI
503
Receive user authentication request
532
Display user authentication request
533
User provides authentication
534
Push user authentication
535
Receive user authentication request
530
Push user authentication request
531
Receive user authentication data
536
Push user authentication data
537
Request user authentication
529
Receive user authentication data
538
Undertake payment transaction via Issuer
539
Receive confirmation of completion of payment transaction from Issuer
540
Push confirmation of payment transaction
541
Receive confirmation of payment transaction
544
Display confirmation of payment transaction
545
Display transaction and payment transaction details
546
Receive confirmation of payment transaction
542
Push confirmation of payment transaction
543
Terminate connection with UPI
547

FIG. 5B

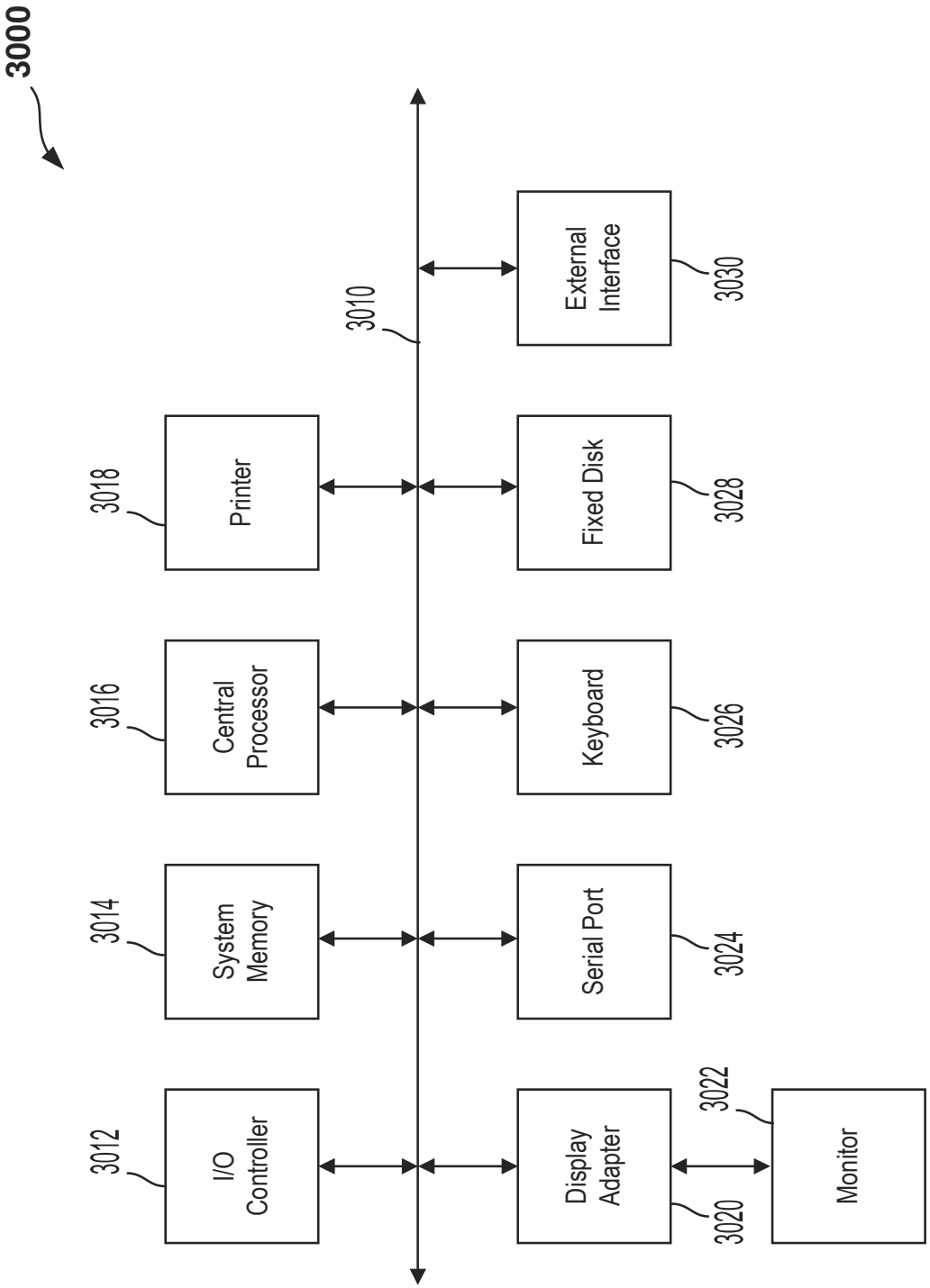
3000
3010
3012
I/O Controller
3014
System Memory
3016
Central Processor
3018
Printer
3020
Display Adapter
3022
Monitor
3024
Serial Port
3026
Keyboard
3028
Fixed Disk
3030
External Interface

FIG. 6

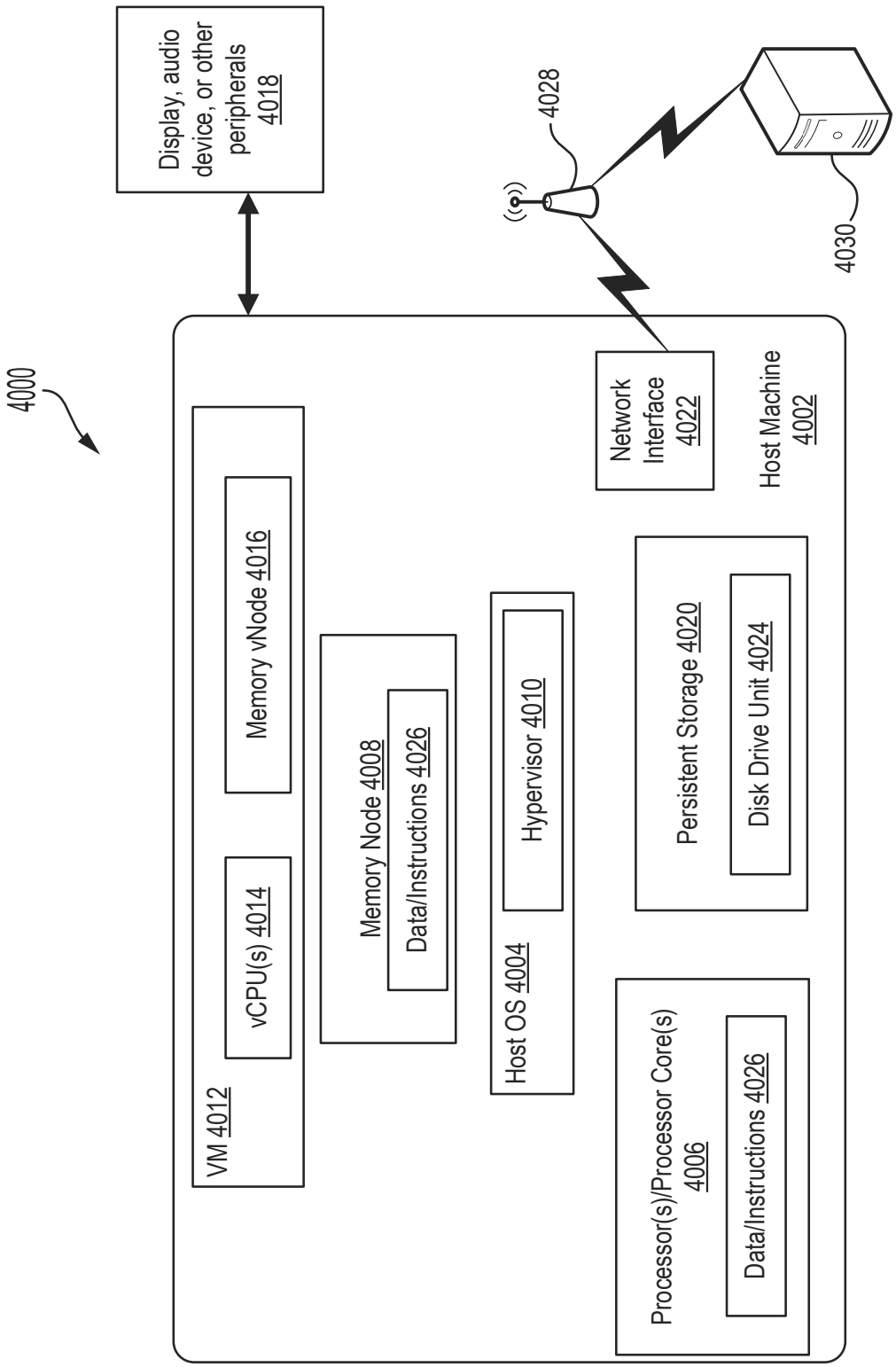
4000
Display, audio device, or other peripherals 4018
4028
4030
Host Machine 4002
Network Interface 4022
VM 4012
vCPU(s) 4014
Memory vNode 4016
Memory Node 4008
Data/Instructions 4026
Host OS 4004
Hypervisor 4010
Persistent Storage 4020
Disk Drive Unit 4024
Processor(s)/Processor Core(s) 4006
Data/Instructions 4026

FIG. 7