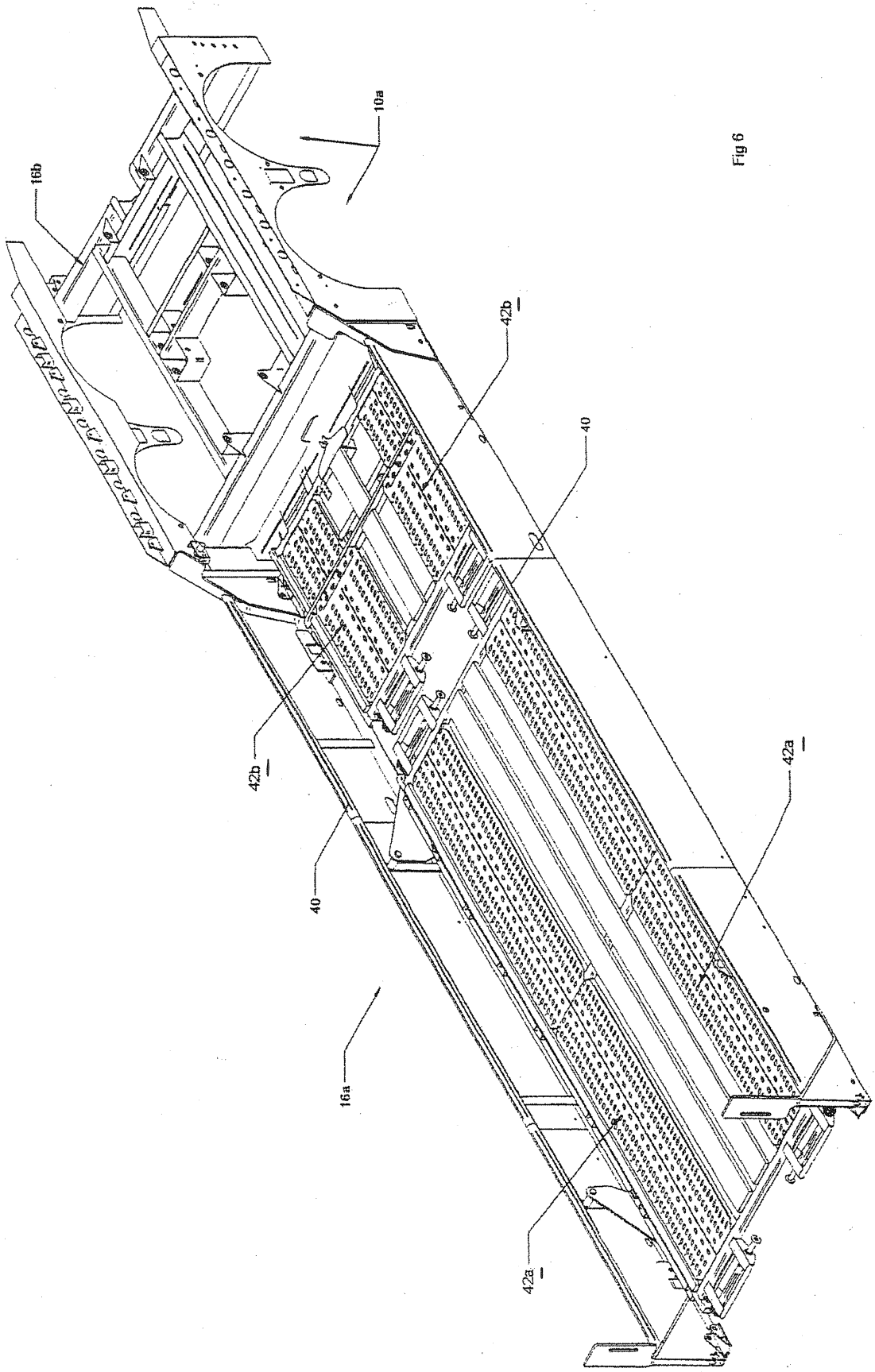

Fig 6