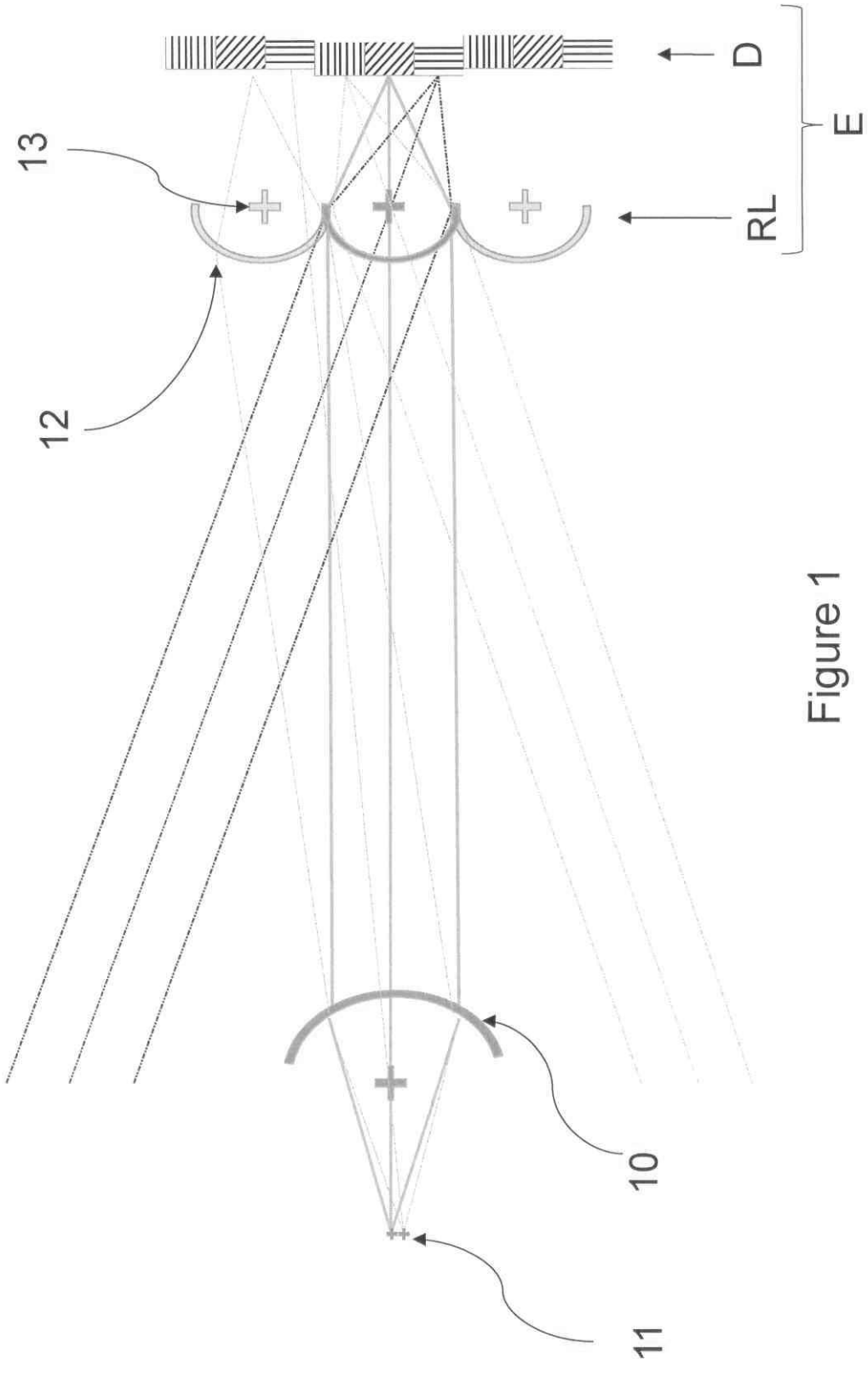

Figure 1

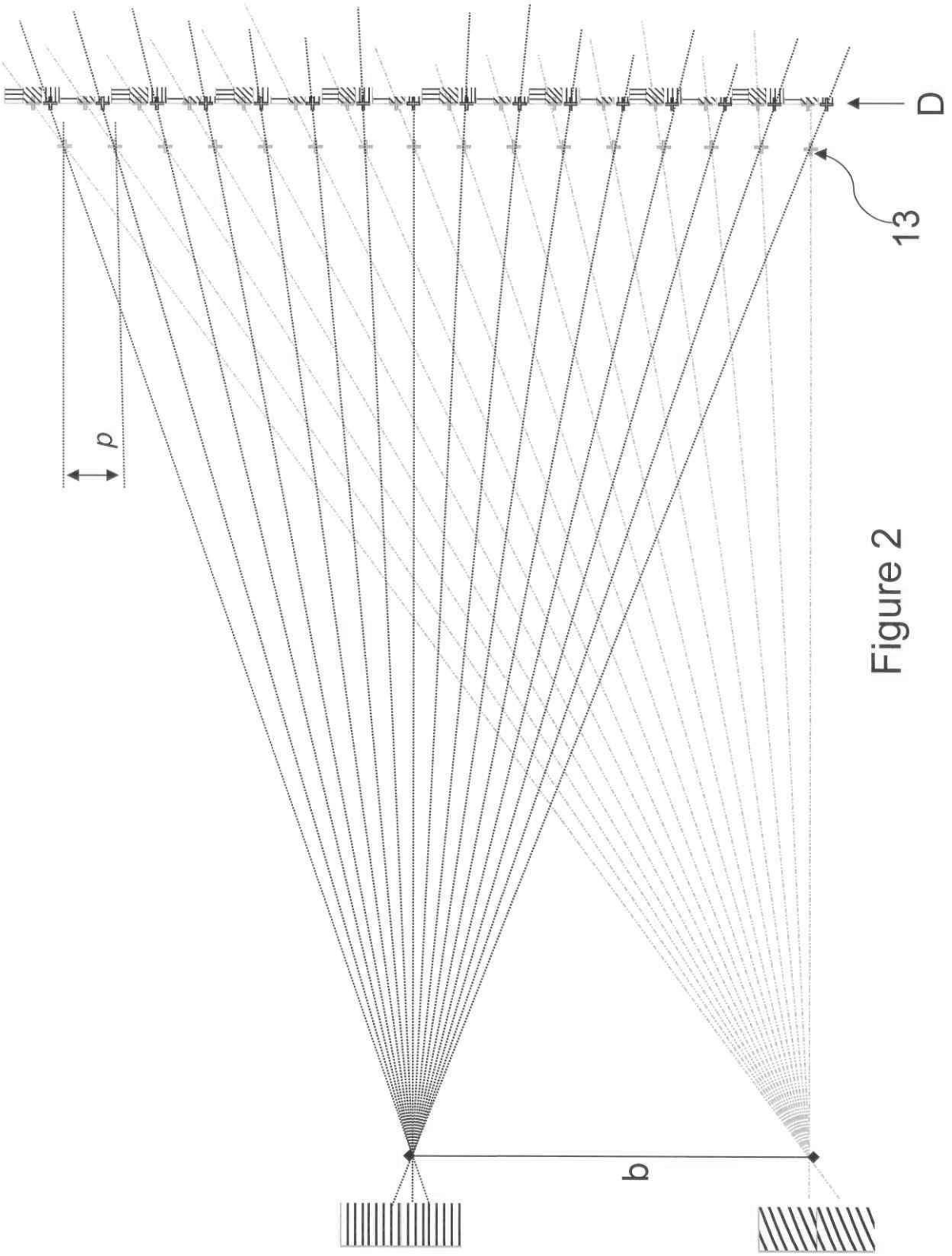

Figure 2

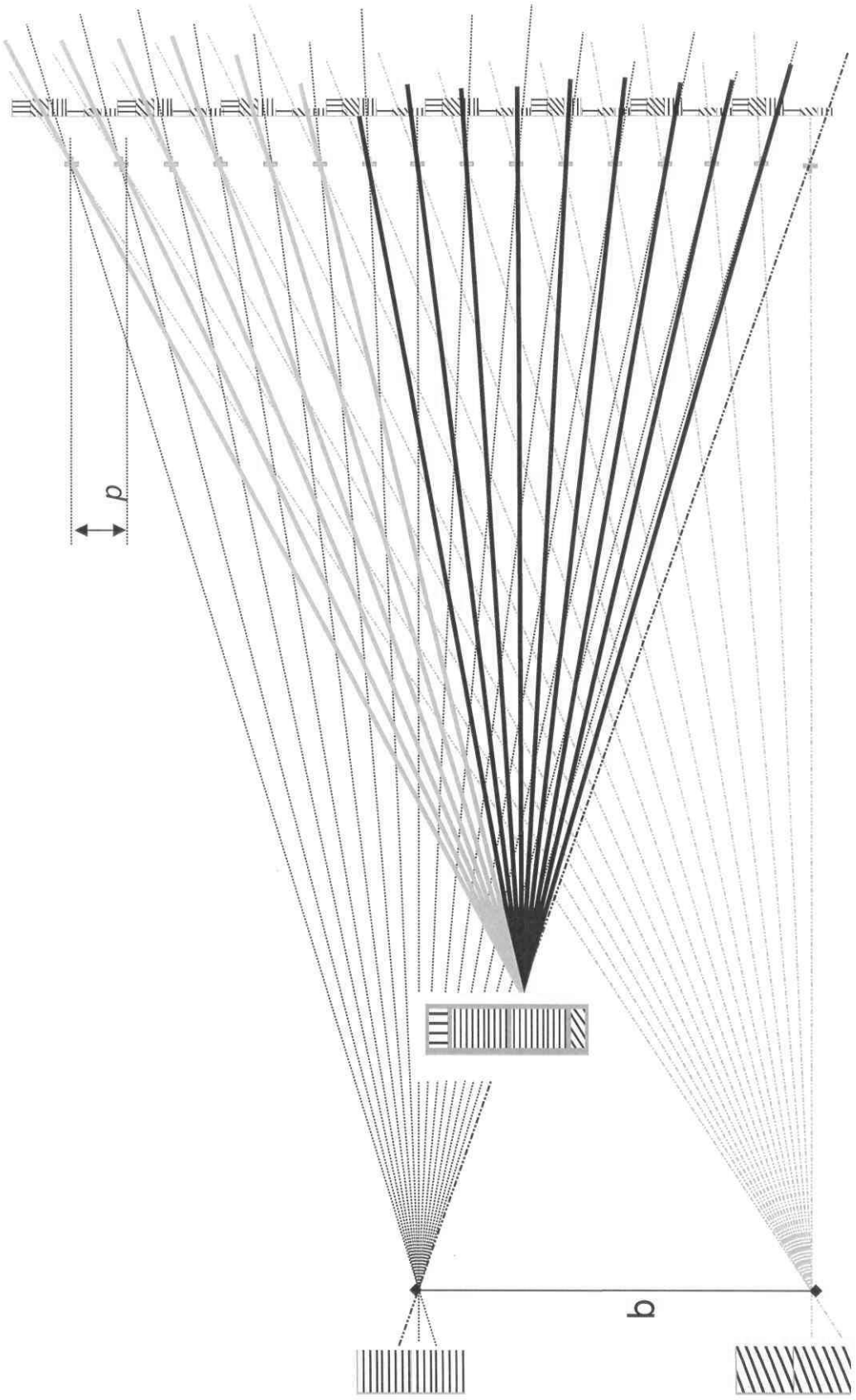

Figure 3

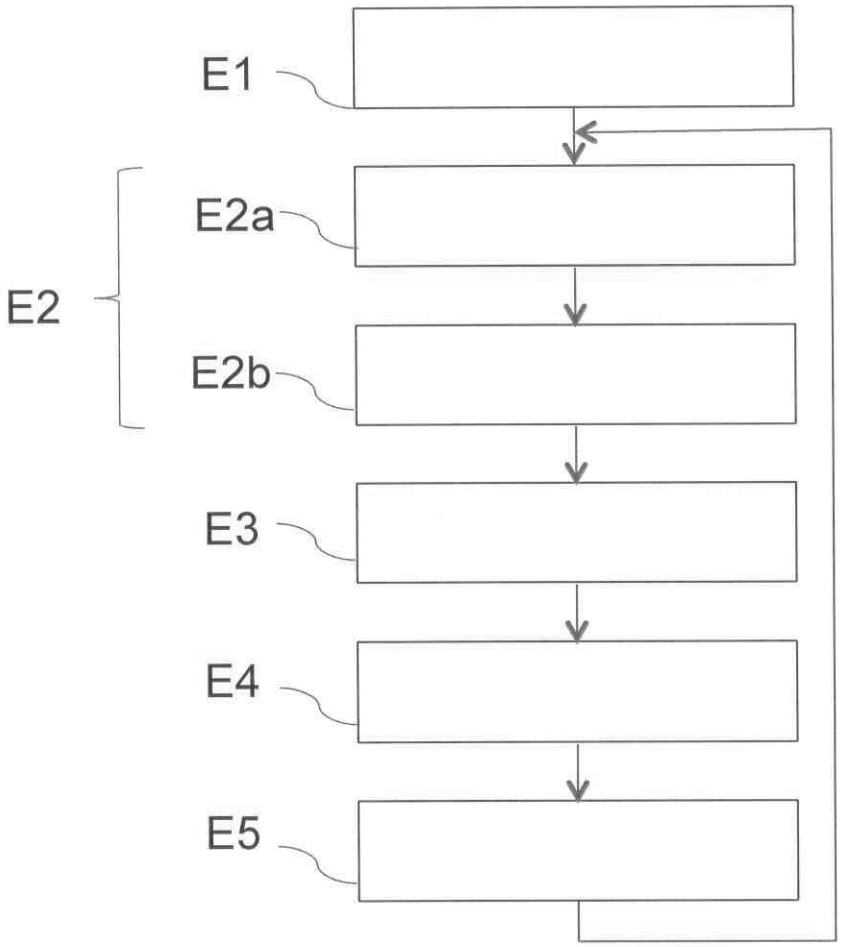

Figure 4

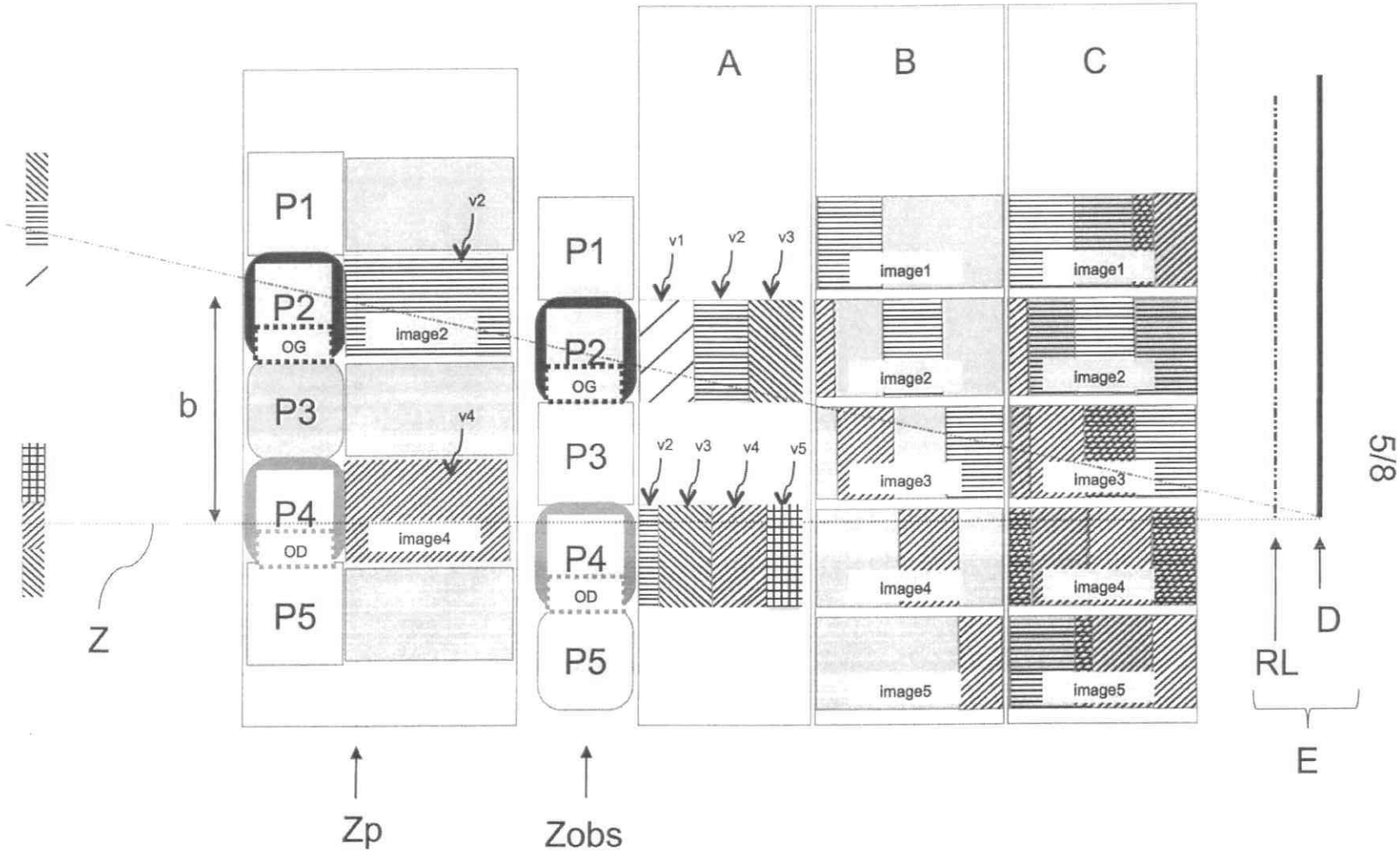
P1
P2
OG
P3
P4
OD
P5
v2
image2
v4
image4
b
Z
Zp
Zobs
A
B
C
v1
v2
v3
v4
v5
image1
image2
image3
image4
image5
RL
D
E

Figure 5

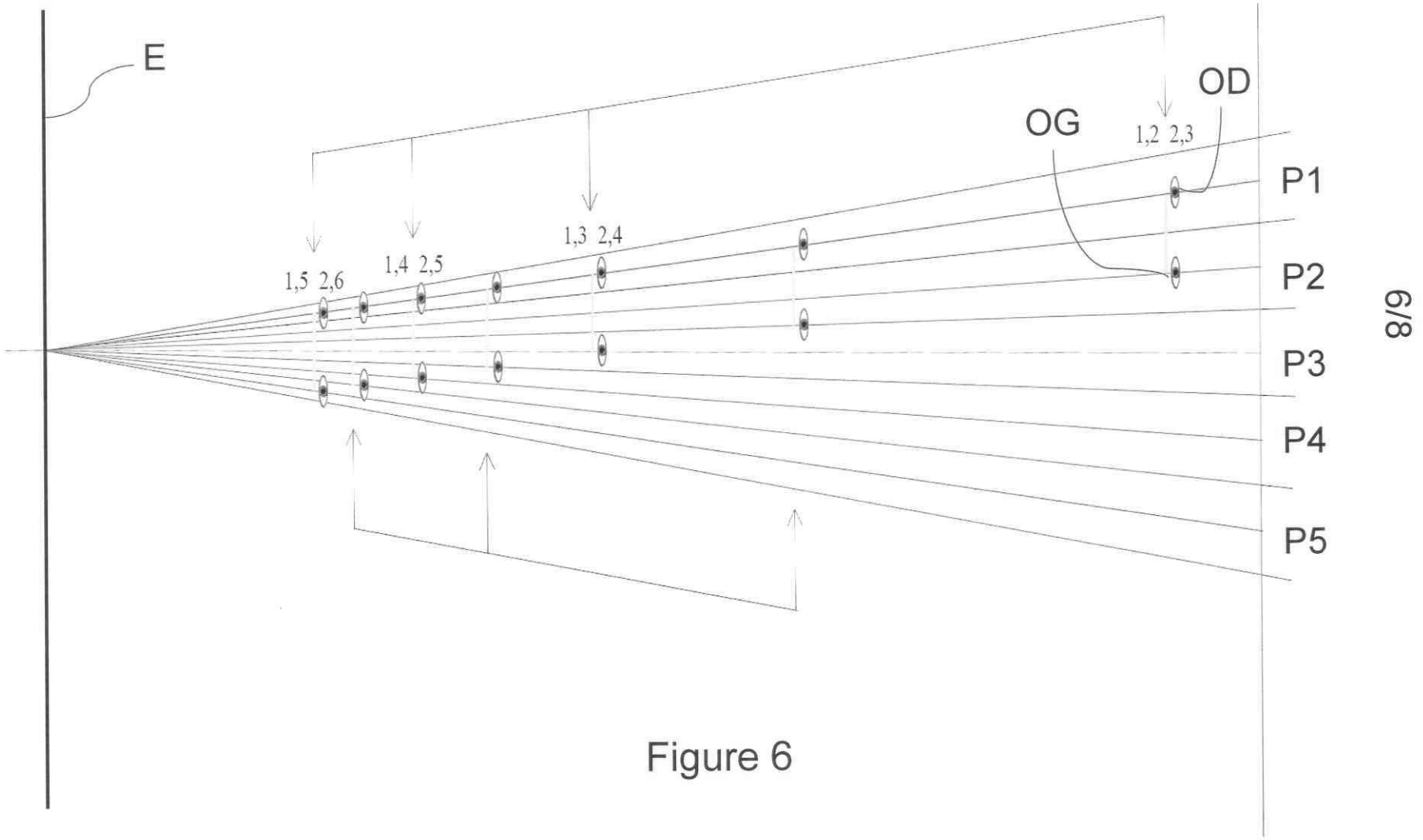

Figure 6

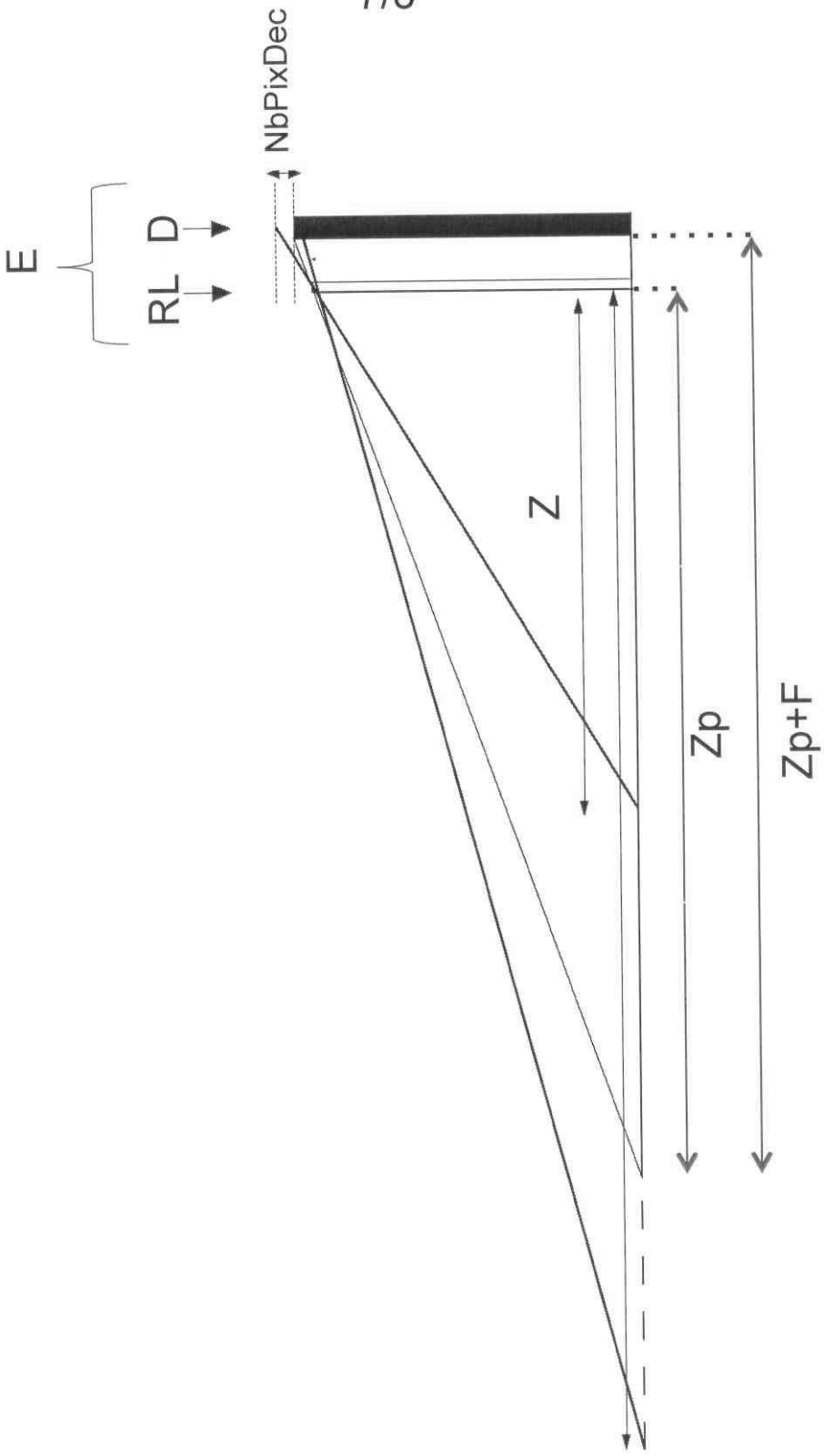

Figure 7

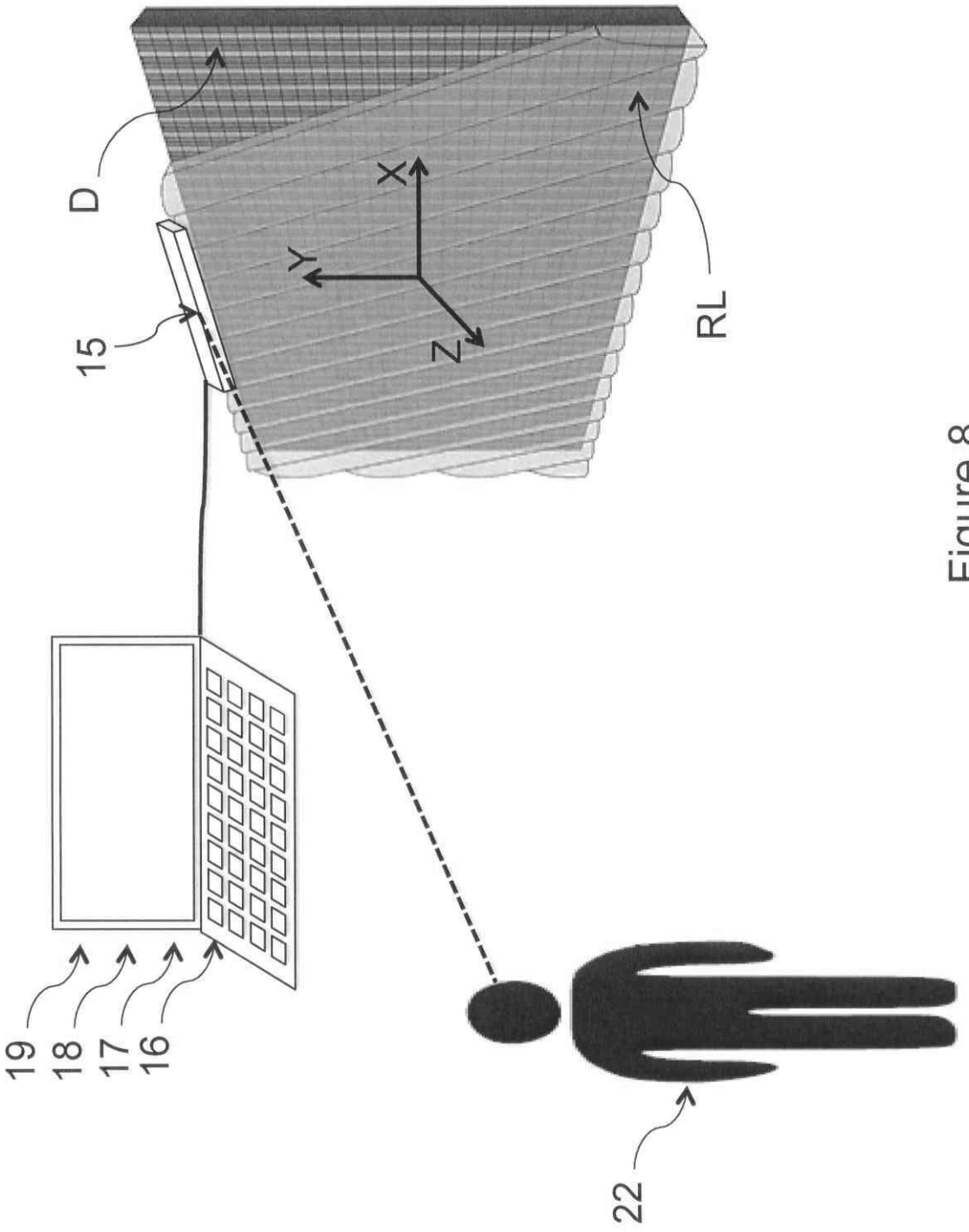

Figure 8