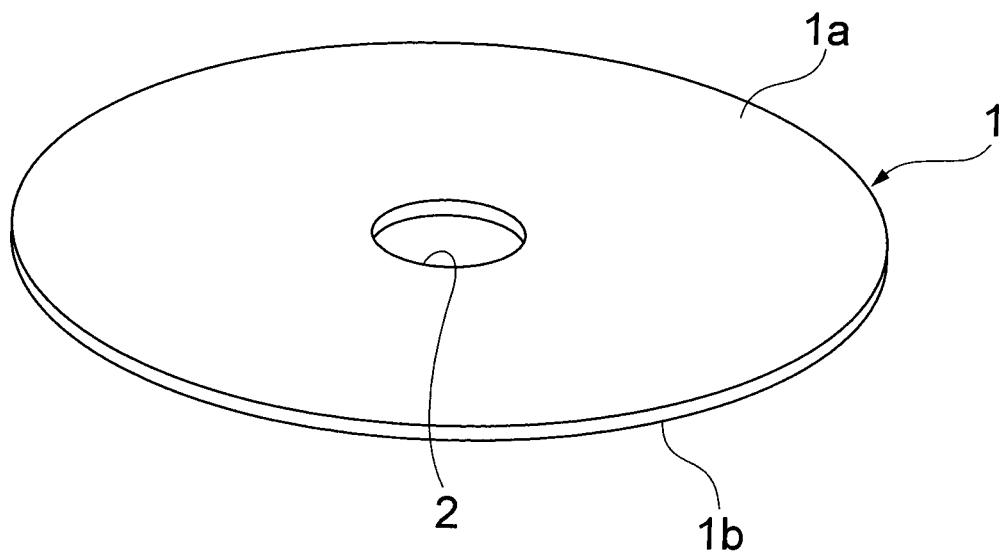

FIG.1

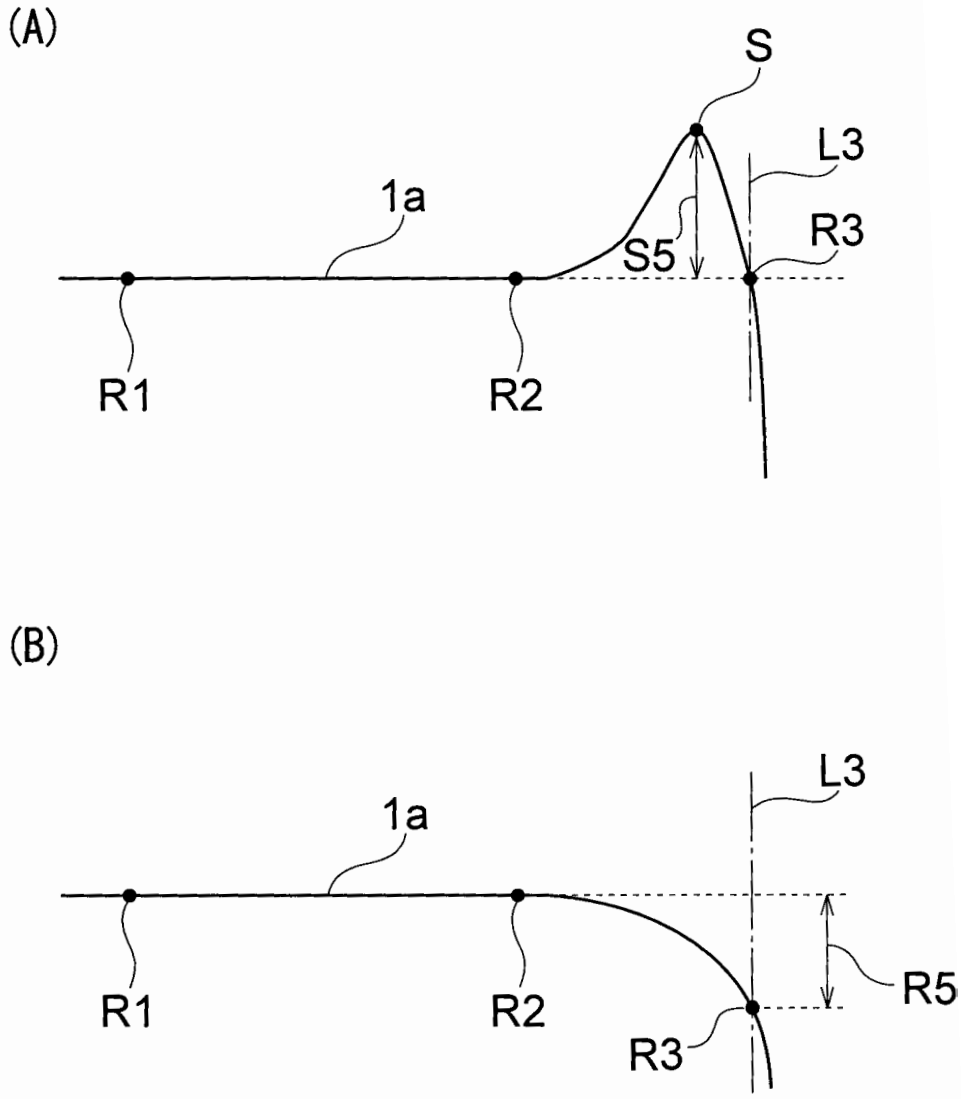

FIG.2

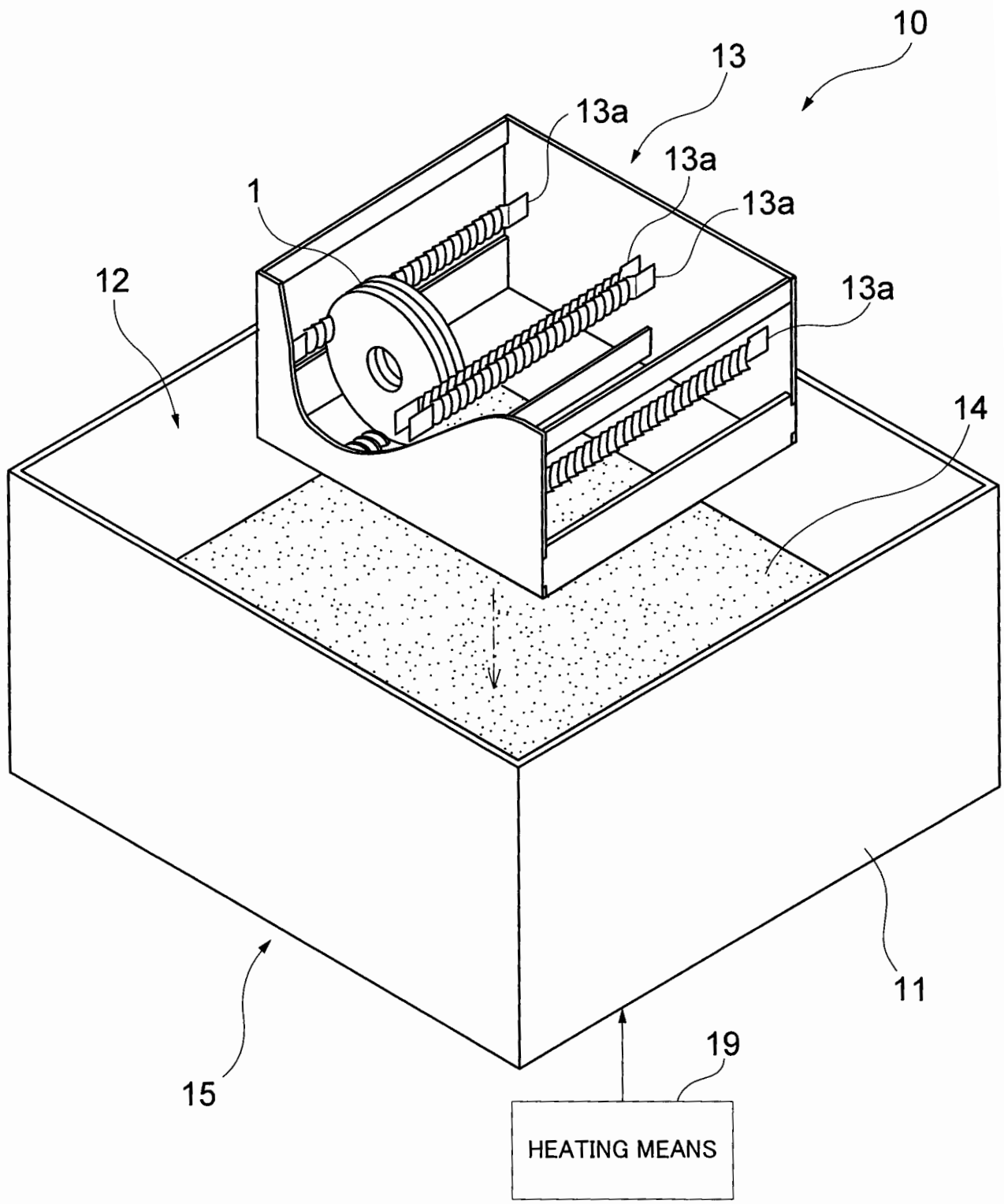

FIG.3

(A)

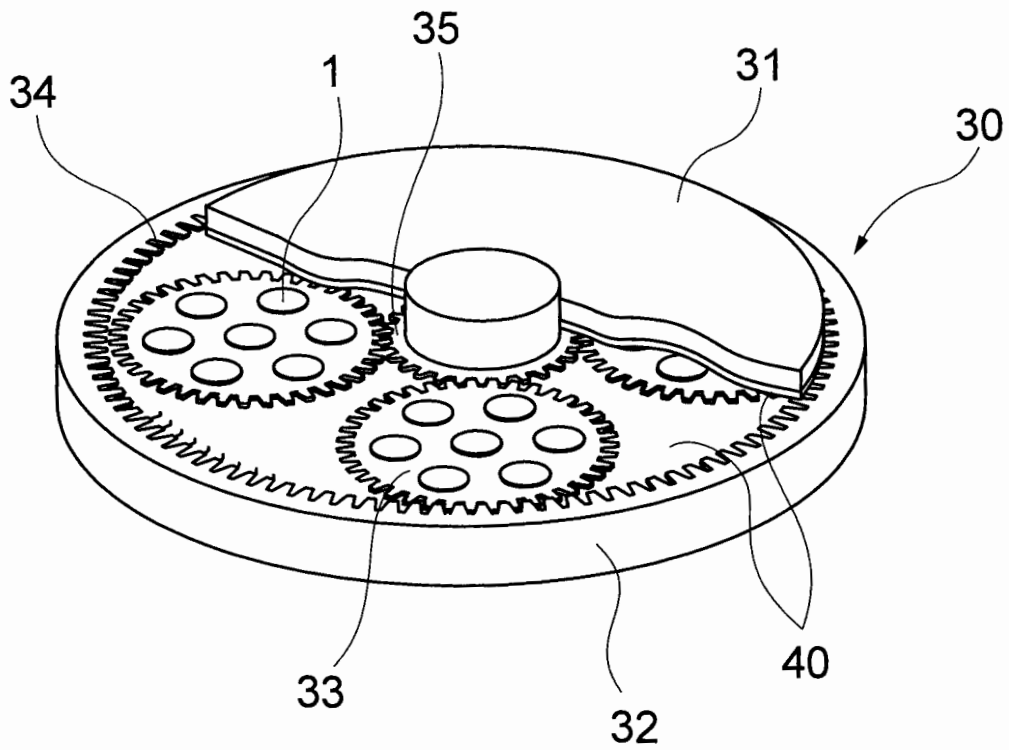

(B)

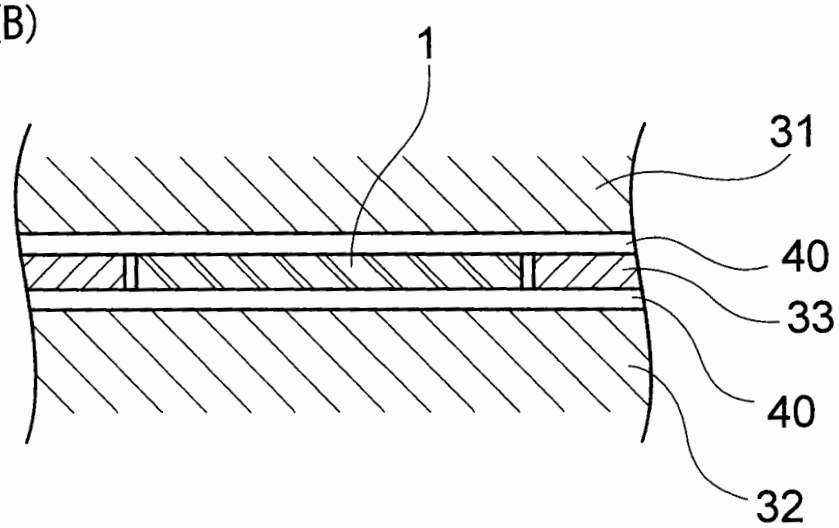

FIG.4

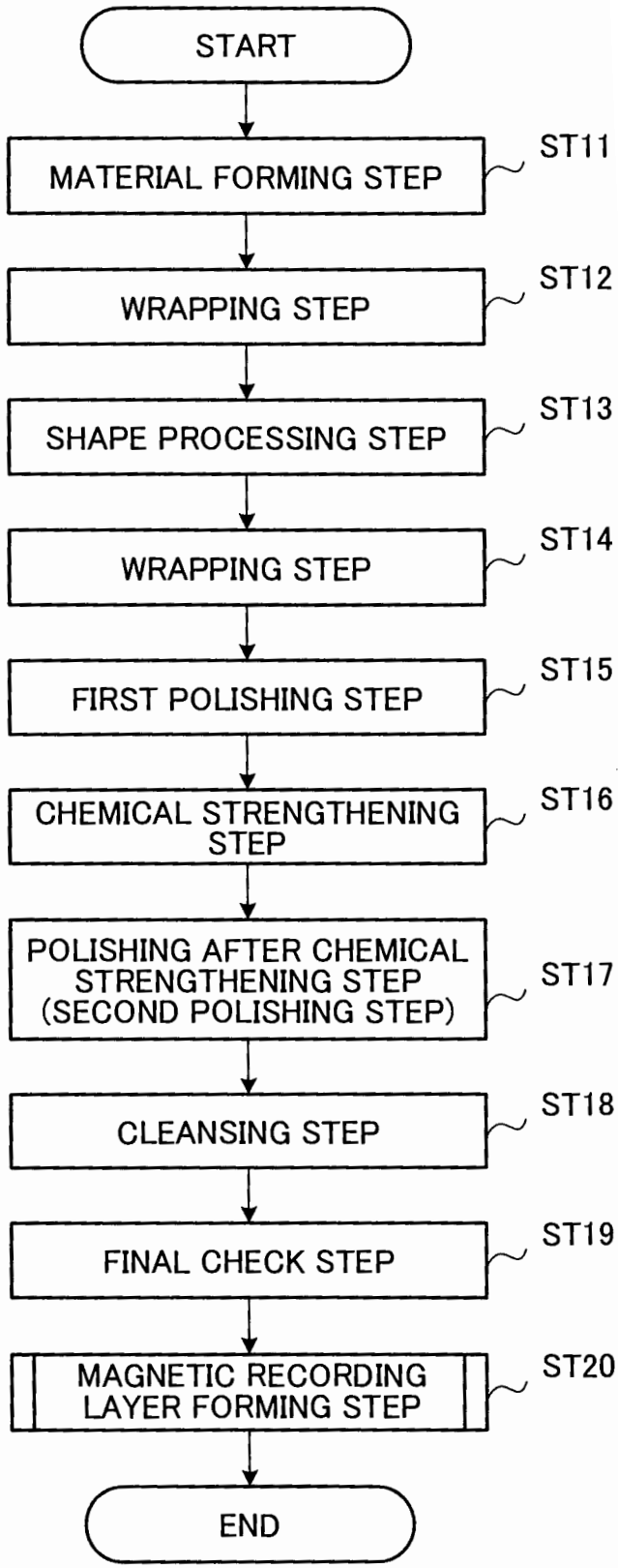
START
MATERIAL FORMING STEP
ST11
WRAPPING STEP
ST12
SHAPE PROCESSING STEP
ST13
WRAPPING STEP
ST14
FIRST POLISHING STEP
ST15
CHEMICAL STRENGTHENING STEP
ST16
POLISHING AFTER CHEMICAL STRENGTHENING STEP (SECOND POLISHING STEP)
ST17
CLEANSING STEP
ST18
FINAL CHECK STEP
ST19
MAGNETIC RECORDING LAYER FORMING STEP
ST20
END

FIG.5

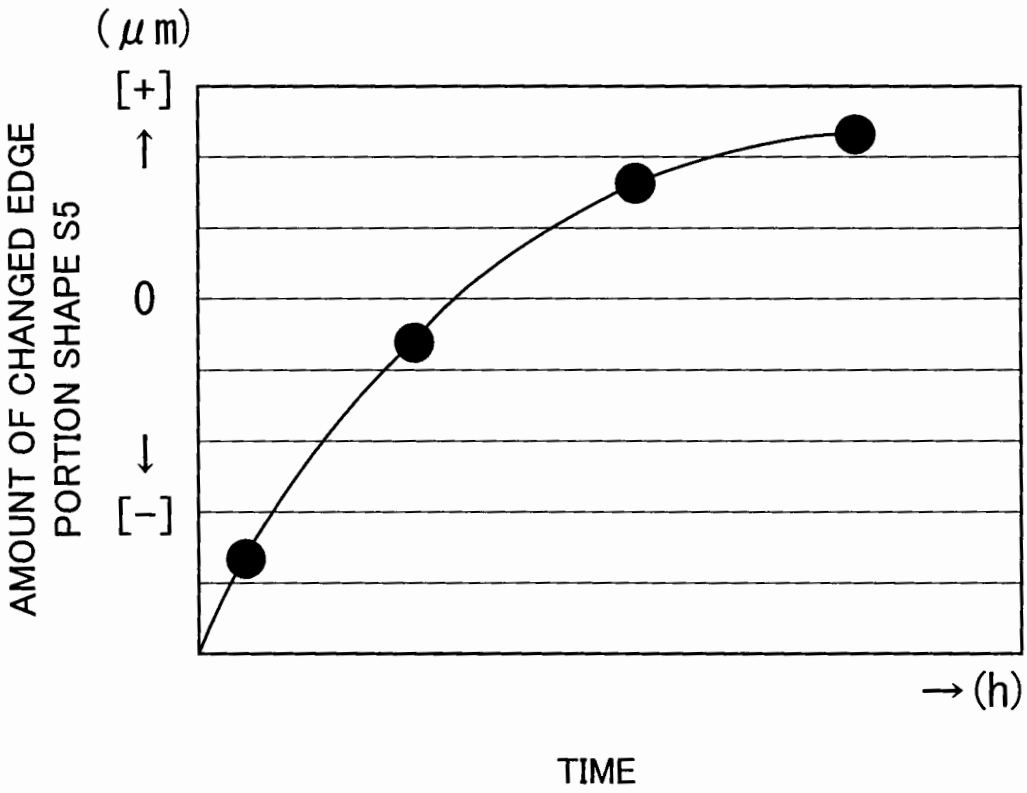

FIG.6

	POLISHING PAD	HARDNESS OF POLISHING PAD	PARTICLE DIAMETER OF ABRASIVE COMPOUND	EDGE PORTION SHAPE	RESULT (ROLL OFF)
FIRST POLISHING	POLYURETHANE SOFT	80 (C HARDNESS)	1.2 μm	SKI JUMP	0.104 μm
CHEMICAL STRENGTHENING	-----	-----	-----	SKI JUMP	0.164 μm
SECOND POLISHING	POLYURETHANE SOFT	84 (C HARDNESS)	40nm	ROLL OFF	−0.006 μm

	POLISHING PAD	HARDNESS OF POLISHING PAD	PARTICLE DIAMETER OF ABRASIVE COMPOUND	EDGE PORTION SHAPE	RESULT (ROLL OFF)
FIRST POLISHING	POLYURETHANE SOFT	80 (C HARDNESS)	1.2 μm	SKI JUMP	0.104 μm
SECOND POLISHING	POLYURETHANE SOFT	84 (C HARDNESS)	40nm	ROLL OFF	−0.070 μm

FIG.7