2003027992

21 MAY 2003

(12) INTERNATIONAL APPLICATION PUBLISHED UNDER THE PATENT COOPERATION TREATY (PCT)

(19) World Intellectual Property Organization
International Bureau

(43) International Publication Date
30 May 2002 (30.05.2002)

PCT

(10) International Publication Number
WO 02/042213 A3

(51) International Patent Classification[7]: C01G 21/06

(21) International Application Number: PCT/EP01/13492

(22) International Filing Date:
21 November 2001 (21.11.2001)

(25) Filing Language: English

(26) Publication Language: English

(30) Priority Data:
09/718,370 24 November 2000 (24.11.2000) US

(71) Applicant *(for all designated States except US)*: **HAMMOND GROUP INC.** [US/US]; 1414 Field Street, Hammond, IN 46325 (US).

(72) Inventors; and

(75) Inventors/Applicants *(for US only)*: **KLOTZ, Hanns, G.** [DE/US]; 9419 Southmoor Avenue, #7S, Highland, IN 46322 (US). **WILKE, William, Peter, IV** [US/US]; 8147 Frederick Avenue,#1N, Munster, IN 46321 (US).

(74) Agents: **JÖNSSON, Hans-Peter** et al.; Von Kreisler Selting Werner, Deichmannhaus am Dom, 50667 Köln (DE).

(81) Designated States *(national)*: AE, AG, AL, AM, AT, AU, AZ, BA, BB, BG, BR, BY, BZ, CA, CH, CN, CO, CR, CU, CZ, DE, DK, DM, DZ, EC, EE, ES, FI, GB, GD, GE, GH, GM, HR, HU, ID, IL, IN, IS, JP, KE, KG, KP, KR, KZ, LC, LK, LR, LS, LT, LU, LV, MA, MD, MG, MK, MN, MW, MX, MZ, NO, NZ, PH, PL, PT, RO, RU, SD, SE, SG, SI, SK, SL, TJ, TM, TR, TT, TZ, UA, UG, US, UZ, VN, YU, ZA, ZW.

(84) Designated States *(regional)*: ARIPO patent (GH, GM, KE, LS, MW, MZ, SD, SL, SZ, TZ, UG, ZM, ZW), Eurasian patent (AM, AZ, BY, KG, KZ, MD, RU, TJ, TM), European patent (AT, BE, CH, CY, DE, DK, ES, FI, FR,

[Continued on next page]

(54) Title: CHEMICAL REACTOR VESSEL AND PROCESS FOR THE CONTINUOUS OXIDATION OF LEAD TO A LEAD OXIDE

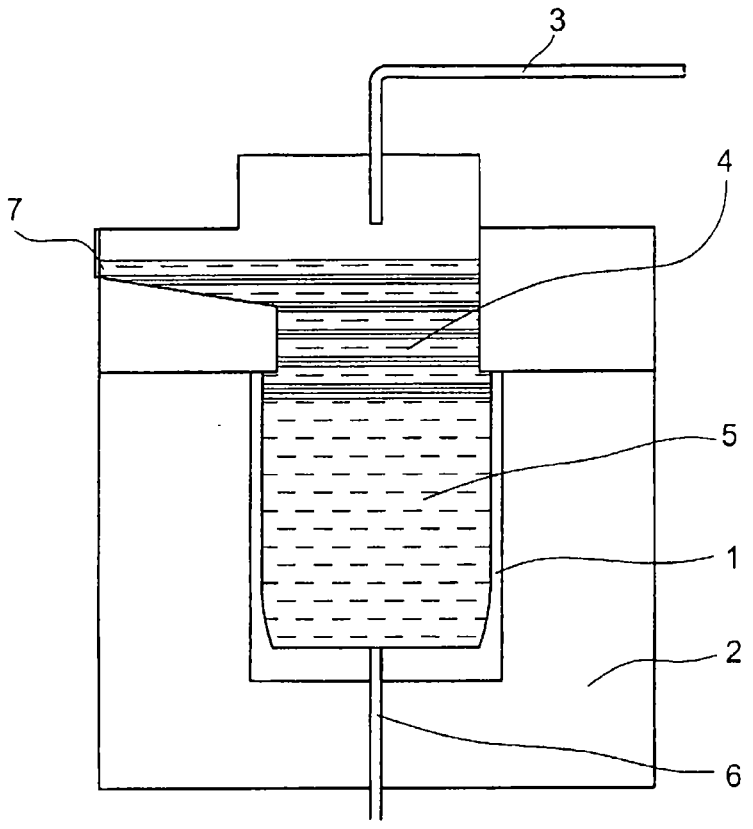

(57) Abstract: The invention relates to a chemical reactor vessel for the continuous oxidation of lead (Pb) to yellow lead oxide (PbO, ortho-rhombic litharge), and a process for the continuous oxidation of lead (Pb) to said yellow lead oxide (PbO) in said chemical reactor vessel.

162162

ACTION

WO 02/042213 A3

GB, GR, IE, IT, LU, MC, NL, PT, SE, TR), OAPI patent (BF, BJ, CF, CG, CI, CM, GA, GN, GQ, GW, ML, MR, NE, SN, TD, TG).

Published:

— *with international search report*

— *before the expiration of the time limit for amending the claims and to be republished in the event of receipt of amendments*

(88) Date of publication of the international search report:
12 September 2002

For two-letter codes and other abbreviations, refer to the "Guidance Notes on Codes and Abbreviations" appearing at the beginning of each regular issue of the PCT Gazette.