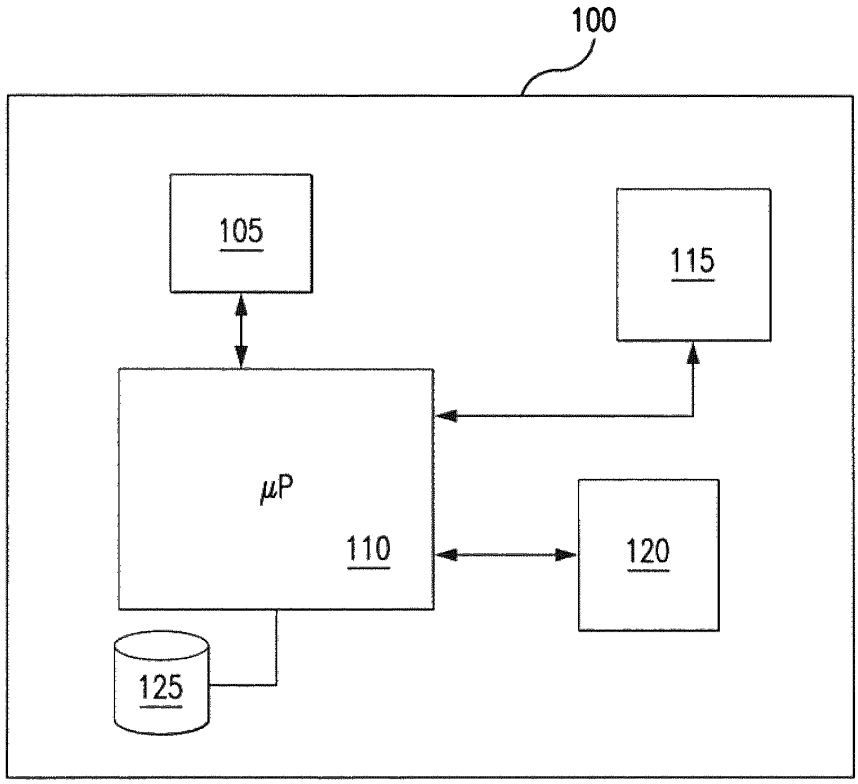

FIG. 1

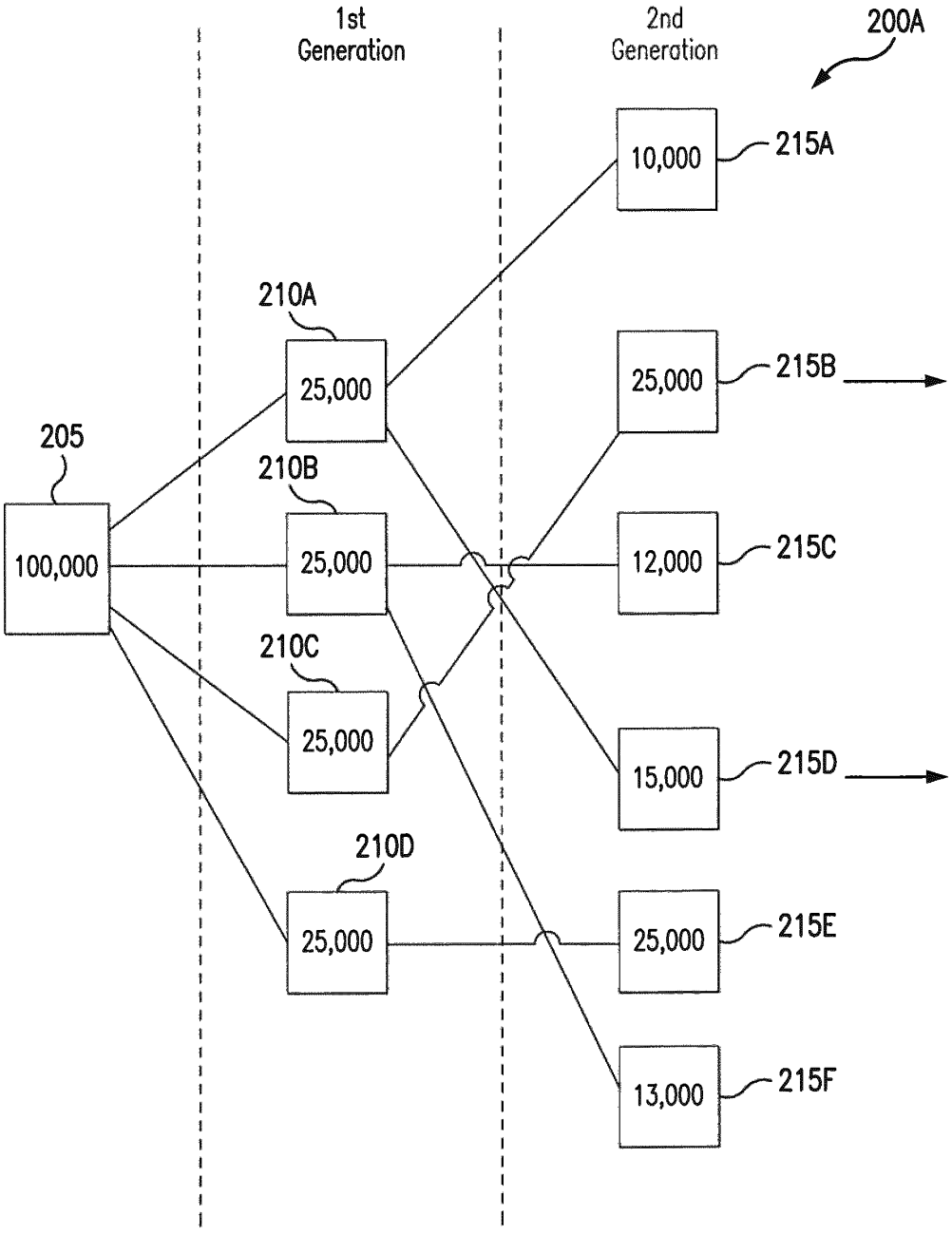
1st Generation
2nd Generation
200A
205
100,000
210A
25,000
210B
25,000
210C
25,000
210D
25,000
10,000
215A
25,000
215B
12,000
215C
15,000
215D
25,000
215E
13,000
215F

FIG. 2A

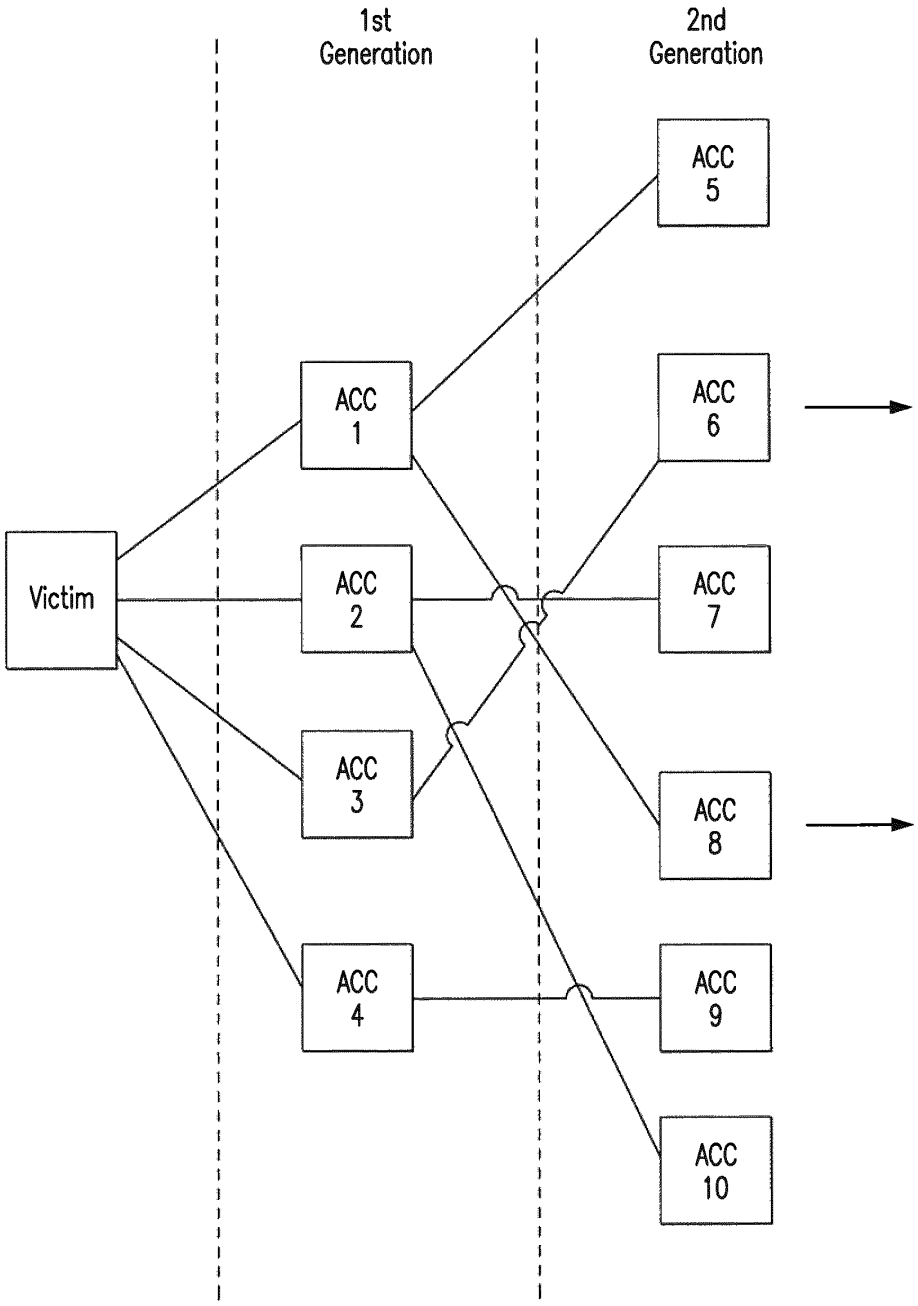
1st
Generation
2nd
Generation
Victim
ACC
1
ACC
2
ACC
3
ACC
4
ACC
5
ACC
6
ACC
7
ACC
8
ACC
9
ACC
10

FIG. 2B

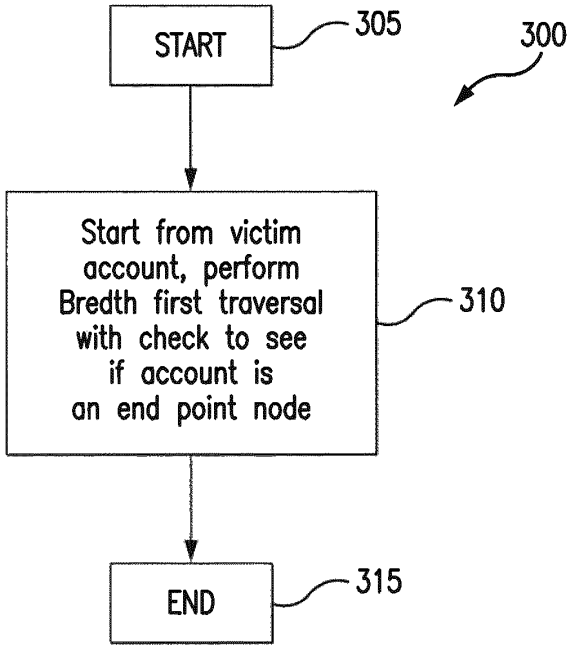
START
305
300
Start from victim account, perform Bredth first traversal with check to see if account is an end point node
310
END
315

FIG. 3

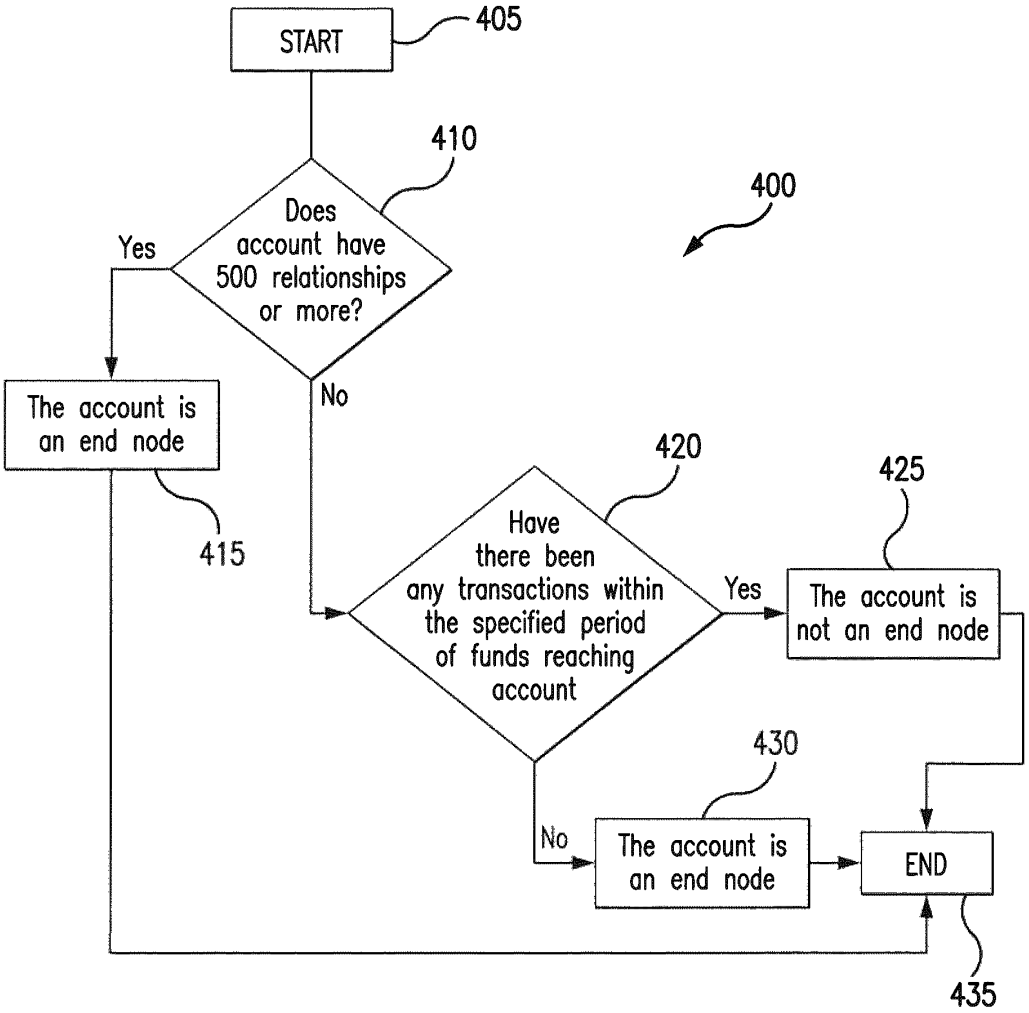
START
405
410
400
Does account have 500 relationships or more?
Yes
No
The account is an end node
415
420
Have there been any transactions within the specified period of funds reaching account
Yes
425
The account is not an end node
430
No
The account is an end node
END
435

FIG. 4

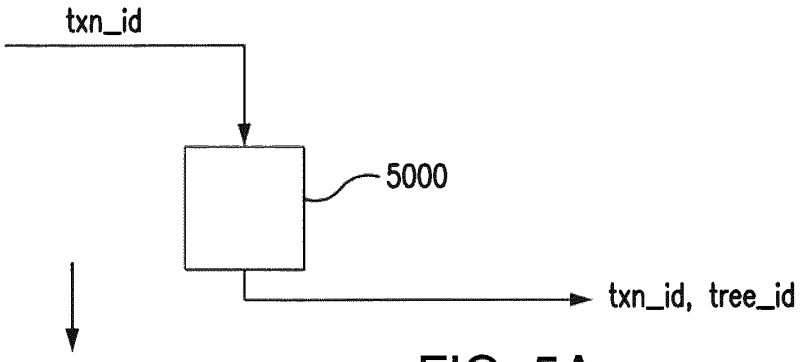

FIG. 5A

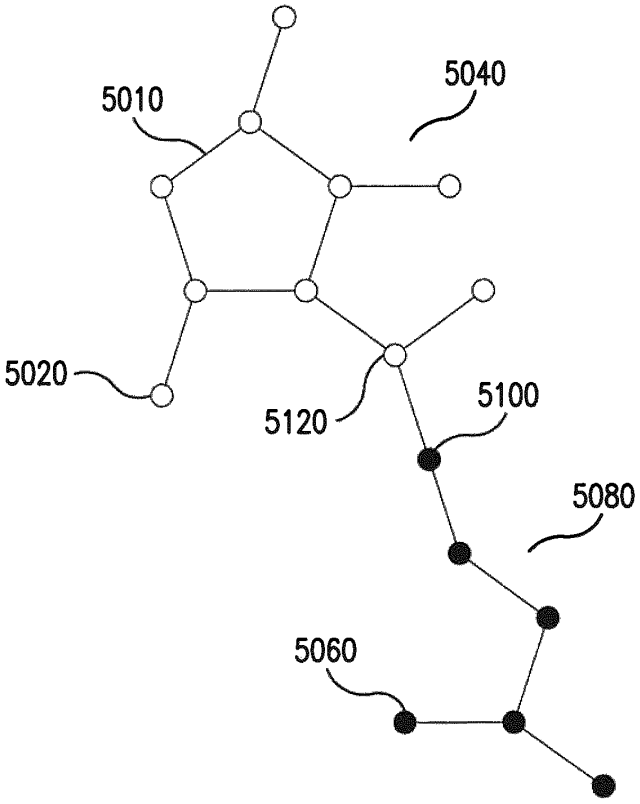

FIG. 5B

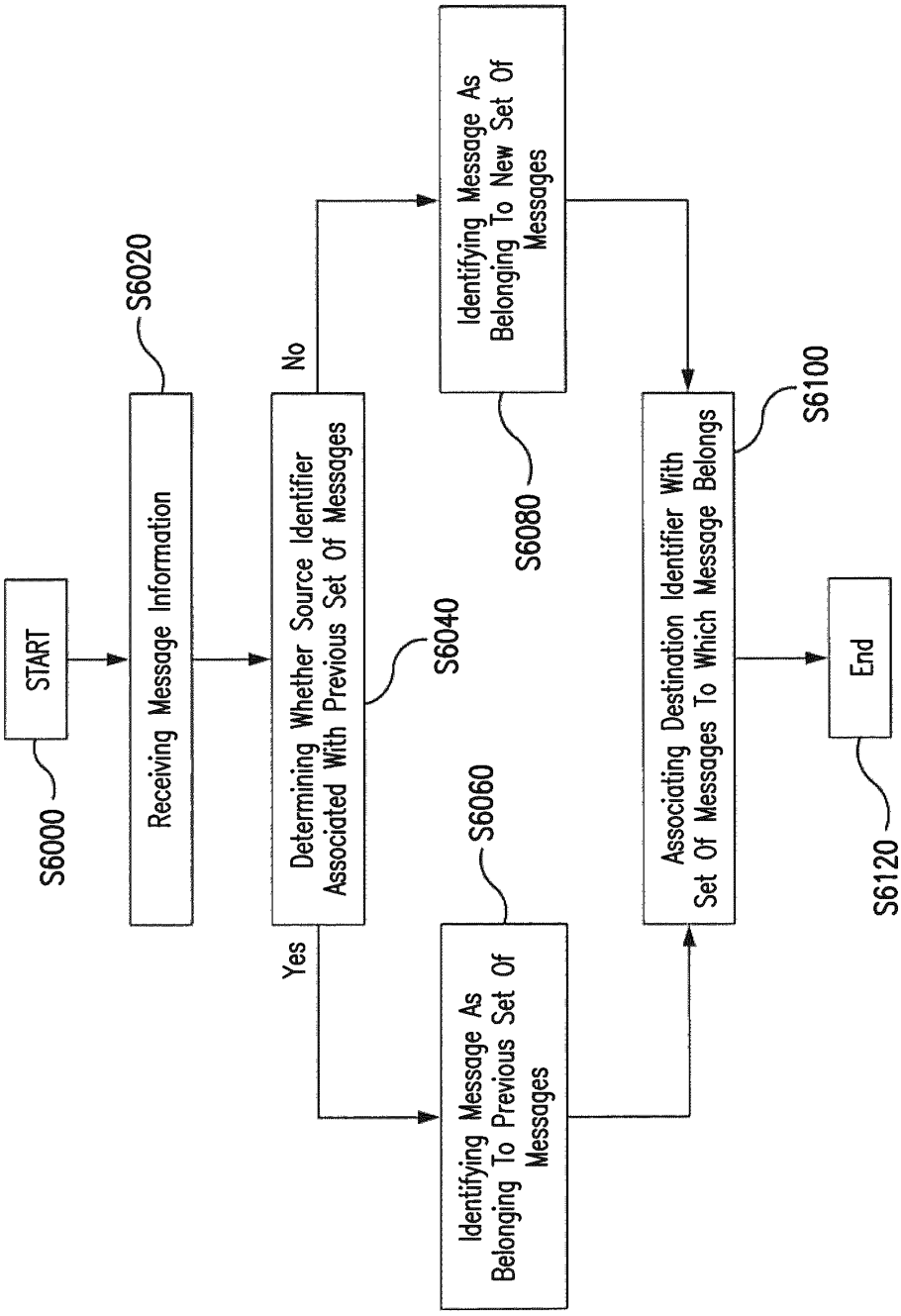
START
S6000
Receiving Message Information
S6020
Determining Whether Source Identifier Associated With Previous Set Of Messages
S6040
No
Yes
Identifying Message As Belonging To New Set Of Messages
S6080
Identifying Message As Belonging To Previous Set Of Messages
S6060
Associating Destination Identifier With Set Of Messages To Which Message Belongs
S6100
End
S6120

FIG. 6

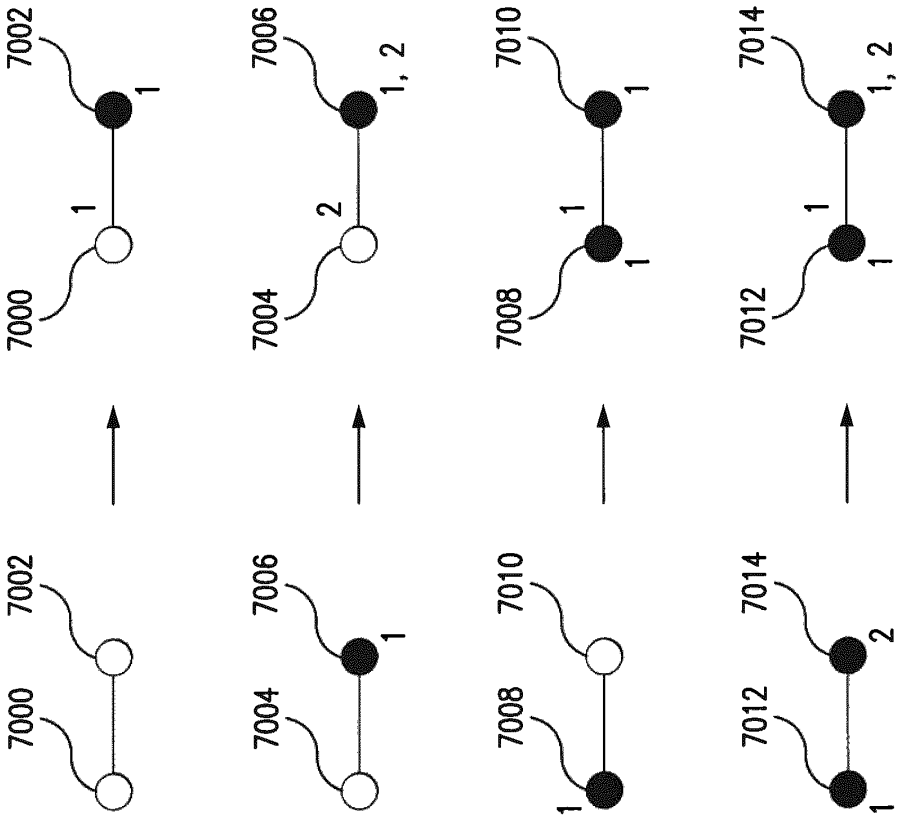

FIG. 7A

FIG. 7B

FIG. 7C

FIG. 7D

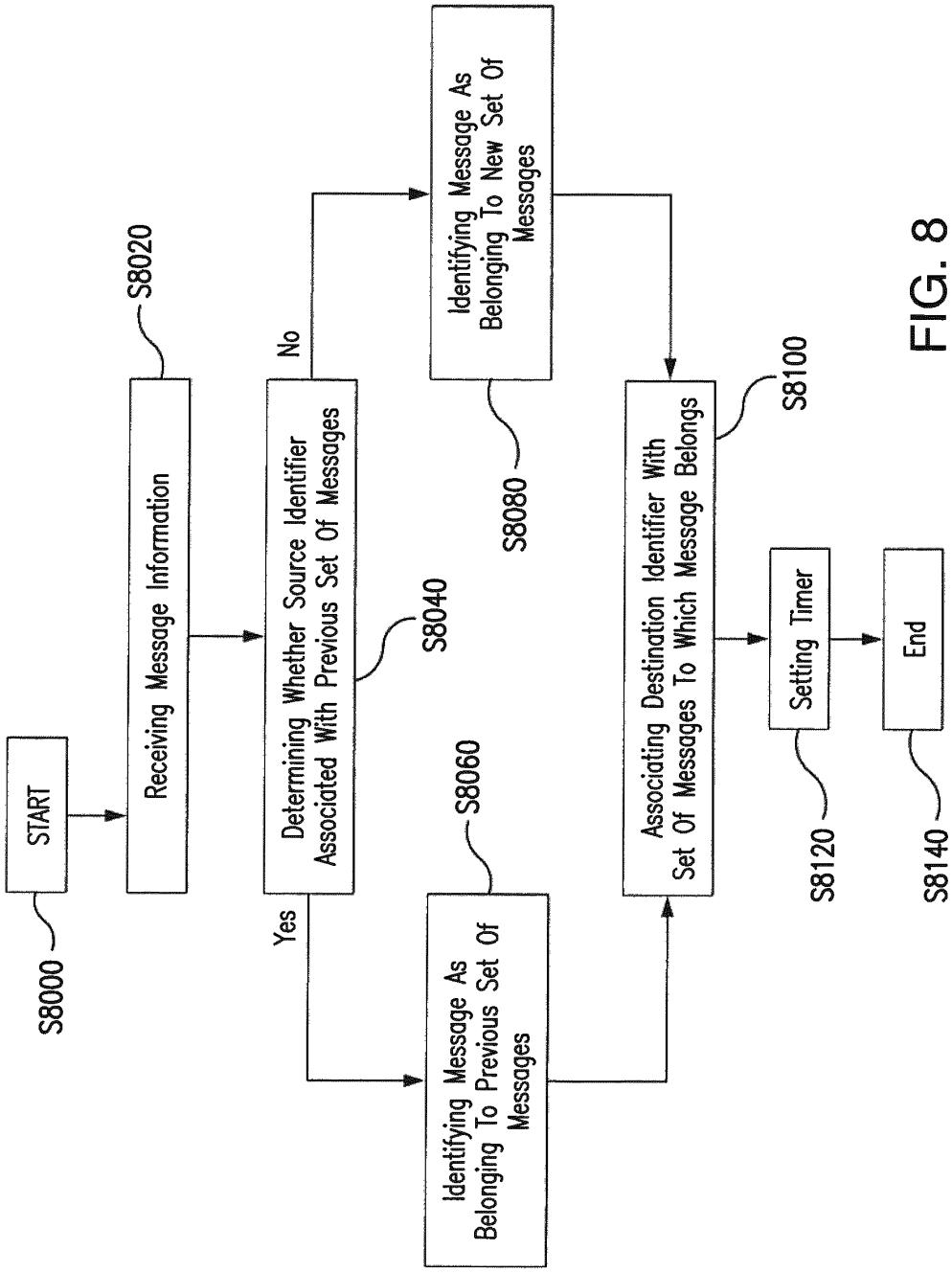
START
S8000
Receiving Message Information
S8020
Determining Whether Source Identifier Associated With Previous Set Of Messages
S8040
No
Yes
Identifying Message As Belonging To New Set Of Messages
S8080
Identifying Message As Belonging To Previous Set Of Messages
S8060
Associating Destination Identifier With Set Of Messages To Which Message Belongs
S8100
Setting Timer
S8120
End
S8140

FIG. 8

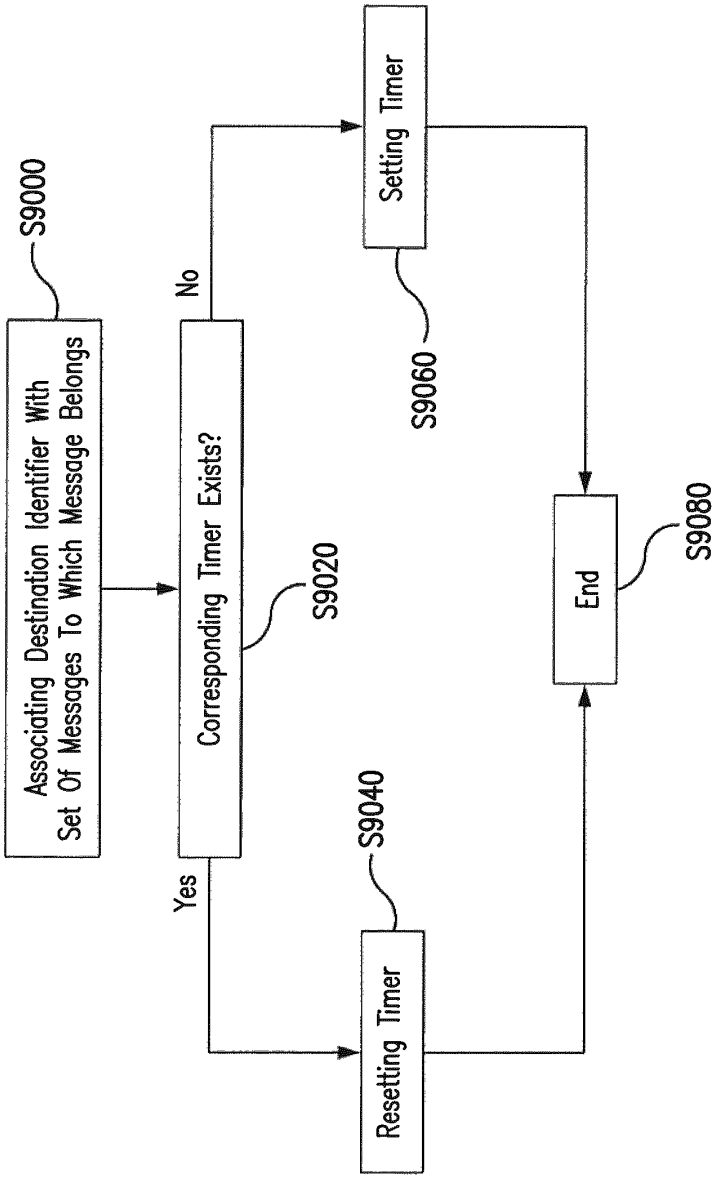
S9000
Associating Destination Identifier With Set Of Messages To Which Message Belongs
S9020
Corresponding Timer Exists?
No
Yes
S9060
Setting Timer
S9040
Resetting Timer
End
S9080

FIG. 9

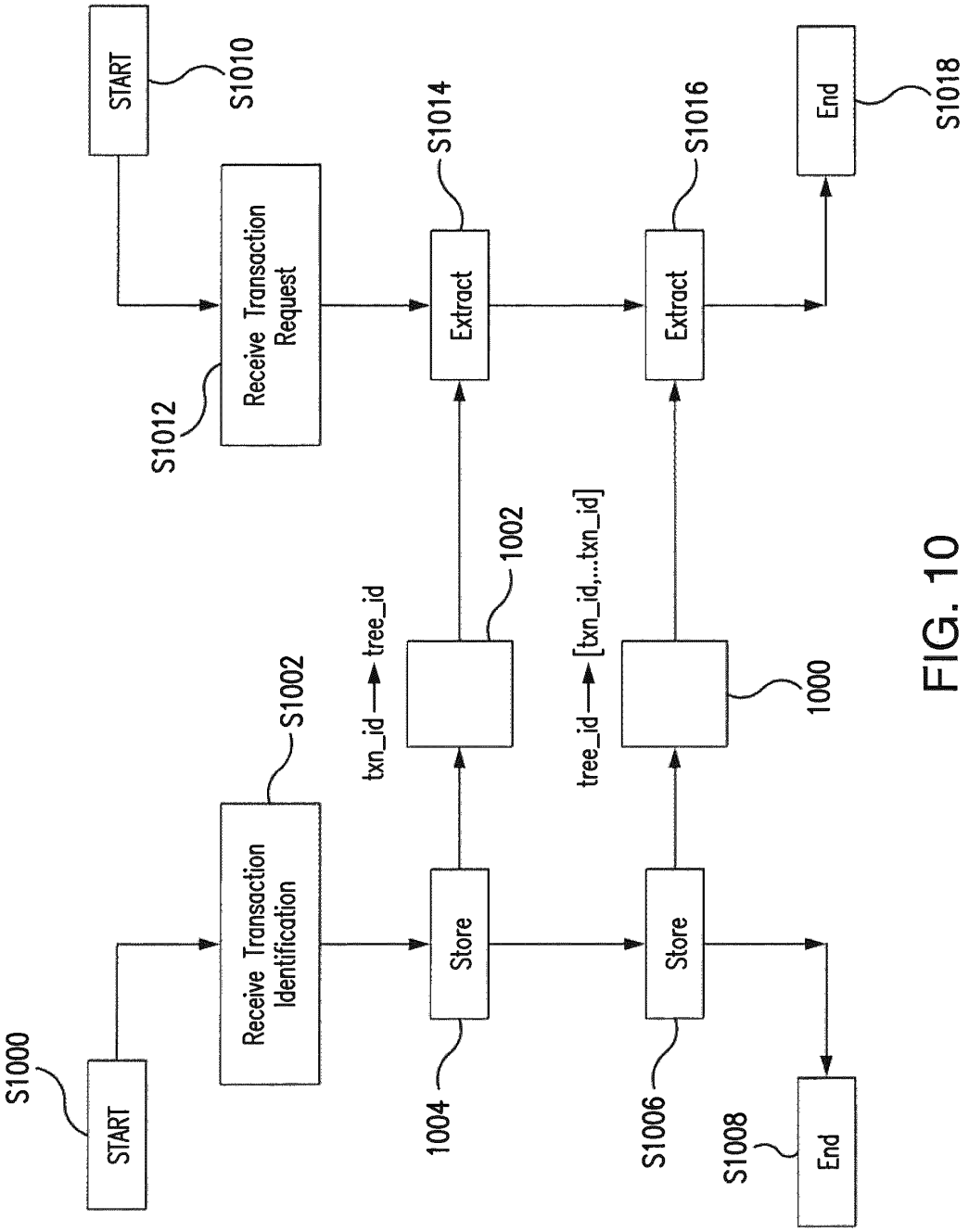
START
S1000
Receive Transaction Identification
S1002
Store
1004
txn_id → tree_id
1002
Extract
S1014
Receive Transaction Request
S1012
START
S1010
tree_id → [txn_id,...txn_id]
1000
Store
S1006
Extract
S1016
End
S1008
End
S1018

FIG. 10

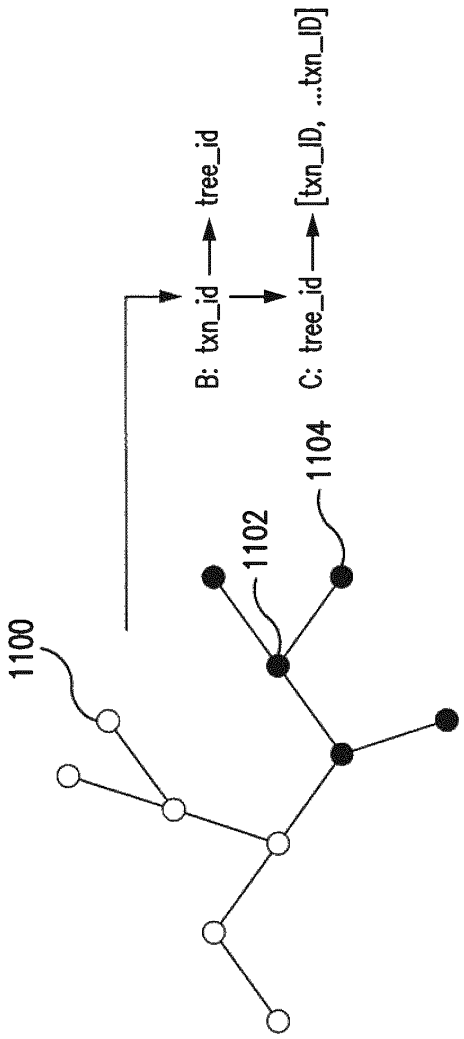

FIG. 11

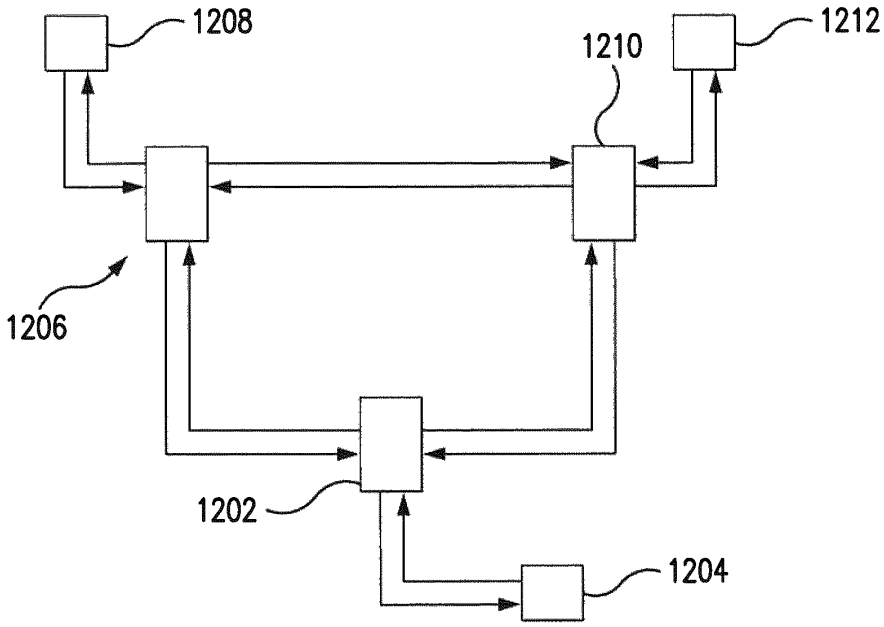
1208
1210
1212
1206
1202
1204

FIG. 12

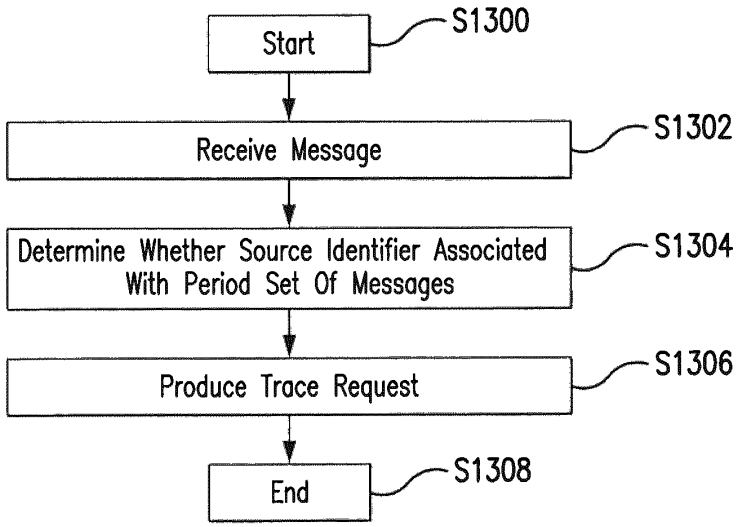
Start
S1300
Receive Message
S1302
Determine Whether Source Identifier Associated With Period Set Of Messages
S1304
Produce Trace Request
S1306
End
S1308

FIG. 13

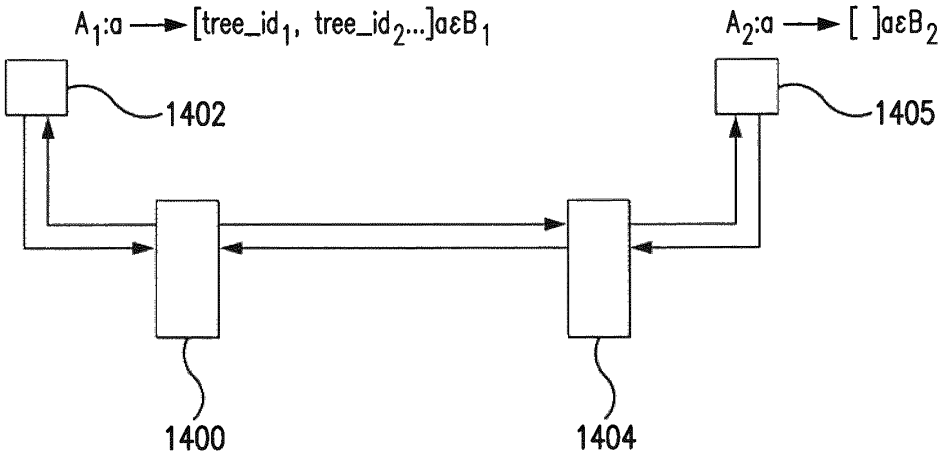
A1:a → [tree_id1, tree_id2...]aεB1
A2:a → [ ]aεB2
1402
1405
1400
1404

FIG. 14

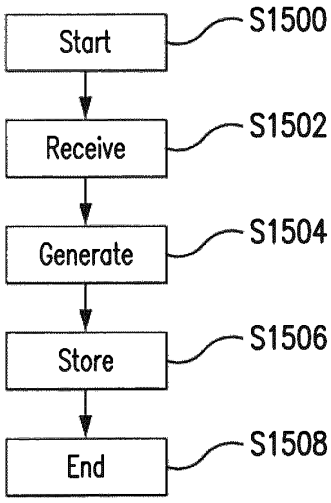
Start
S1500
Receive
S1502
Generate
S1504
Store
S1506
End
S1508

FIG. 15