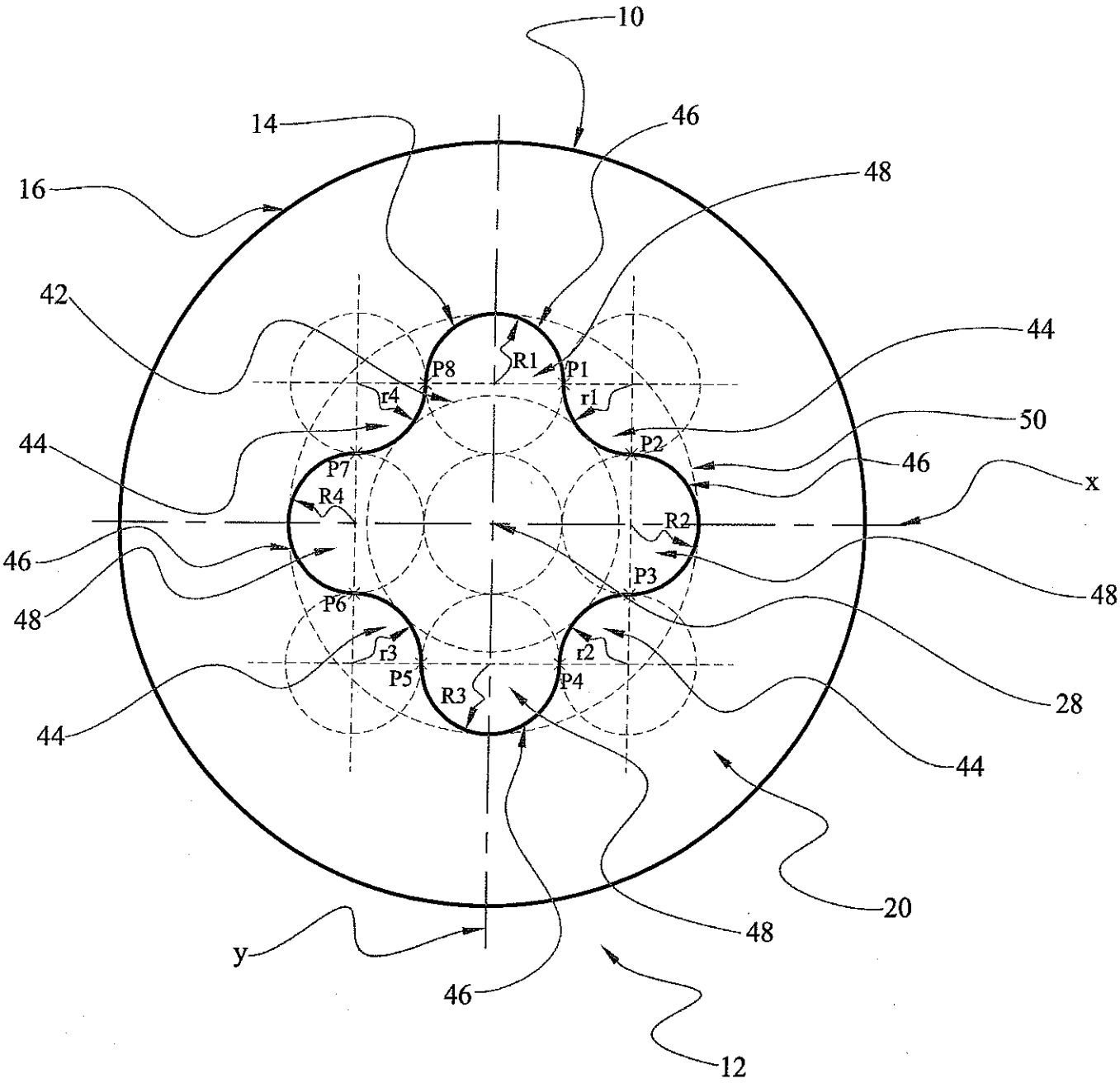
10
14
46
16
48
42
44
P8
R1
P1
r4
r1
50
44
P2
P7
46
x
R4
R2
46
48
P3
48
P6
r3
r2
P5
P4
R3
28
44
44
20
48
y
46
12

FIG 1 A

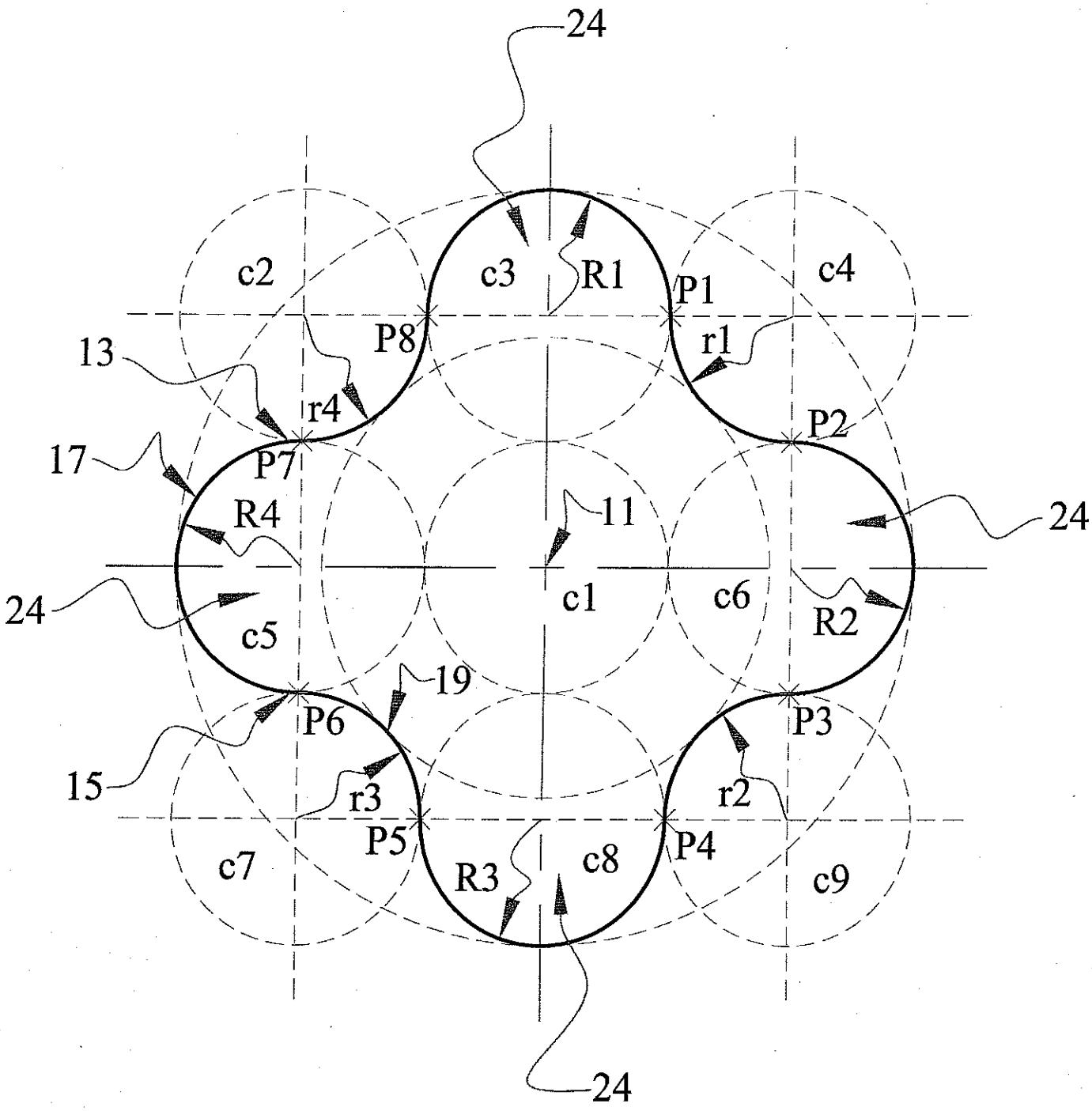
24
c2
c3
R1
P1
c4
P8
r1
13
r4
P2
17
P7
R4
11
24
24
c1
c6
c5
R2
19
P6
P3
15
r3
r2
P5
P4
c7
R3
c8
c9
24

FIG 1 B

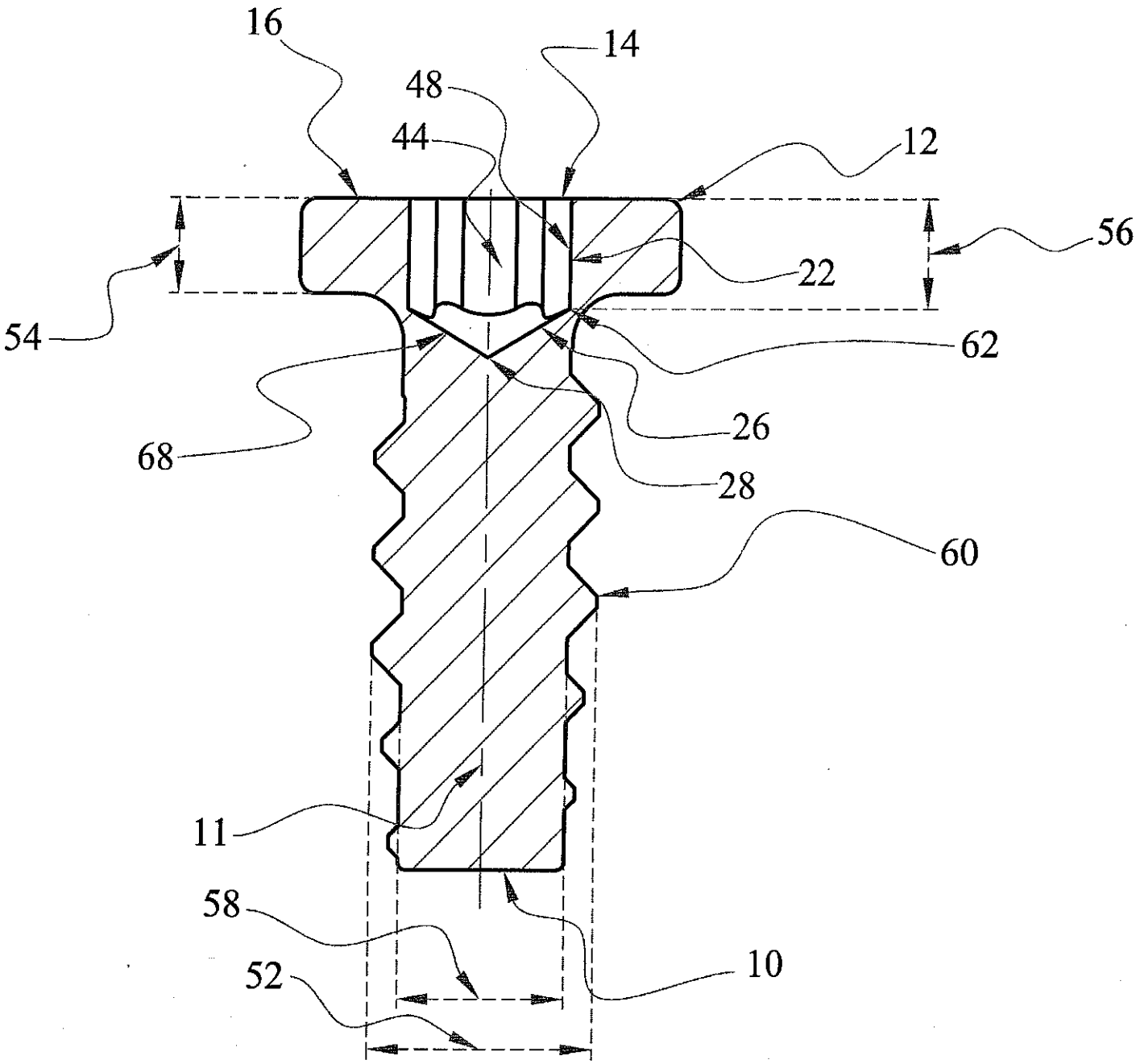

FIG 2 A

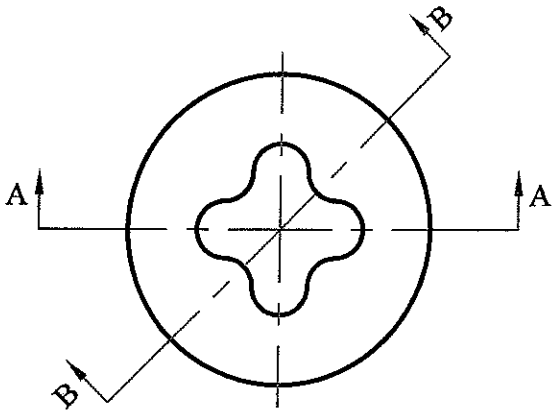

FIG 2 B

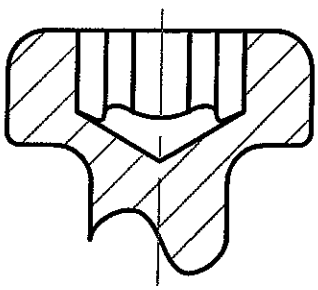

SECTION A-A

FIG 2 C

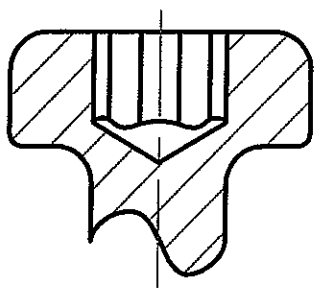

SECTION B-B

FIG 2 D

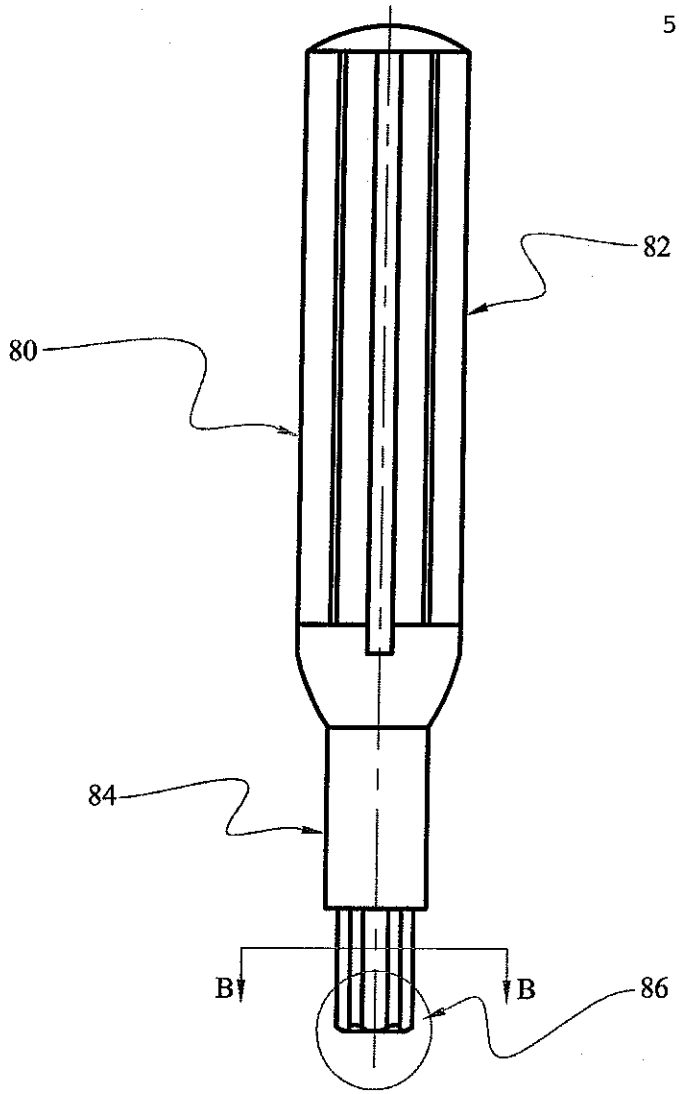

FIG 3 A

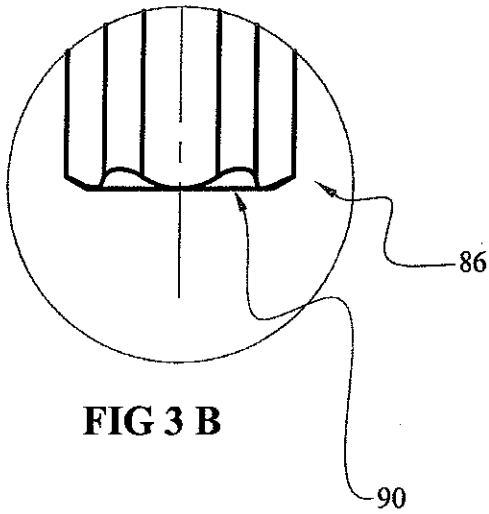

FIG 3 B

SECTION B-B

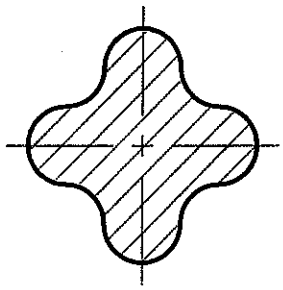

FIG 3 C

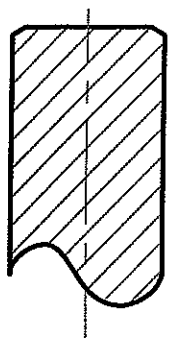

FIG 3 E

SECTION A-A

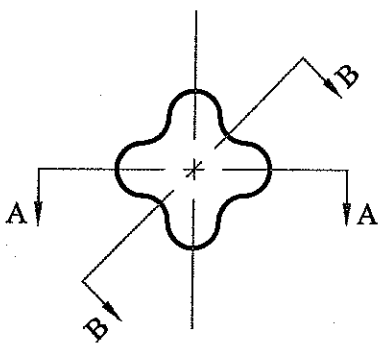

FIG 3 D

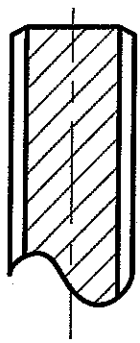

FIG 3 F

SECTION B-B

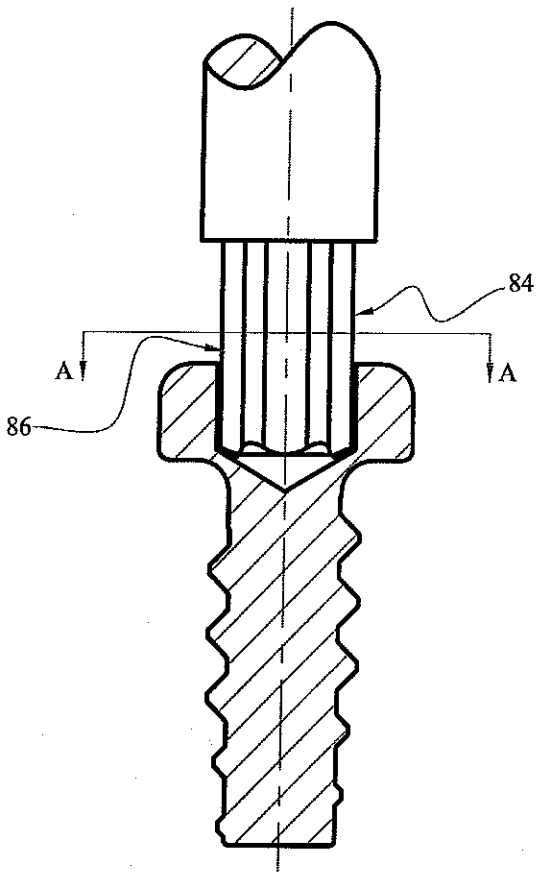

FIG 4 A

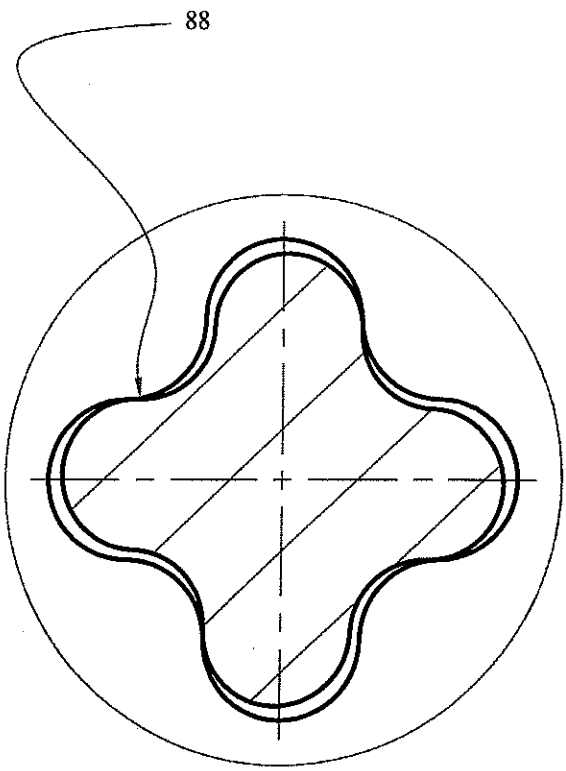

FIG 4 B

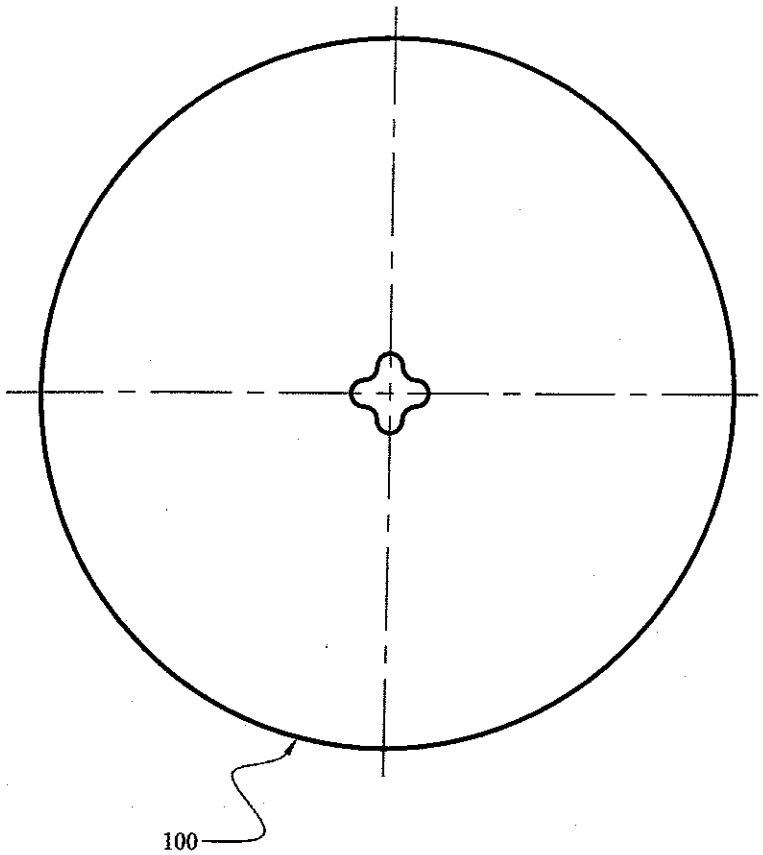

FIG 5 A

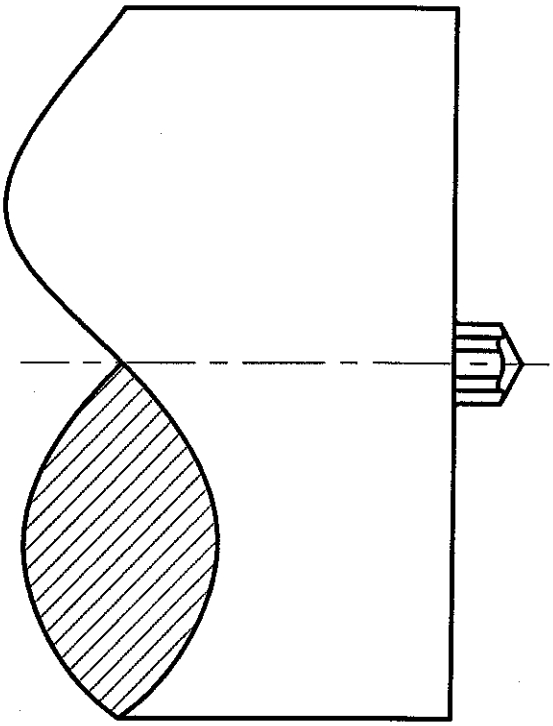

FIG 5 B

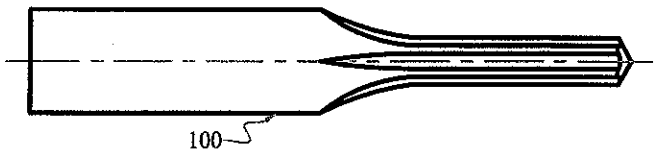

FIG 5 D

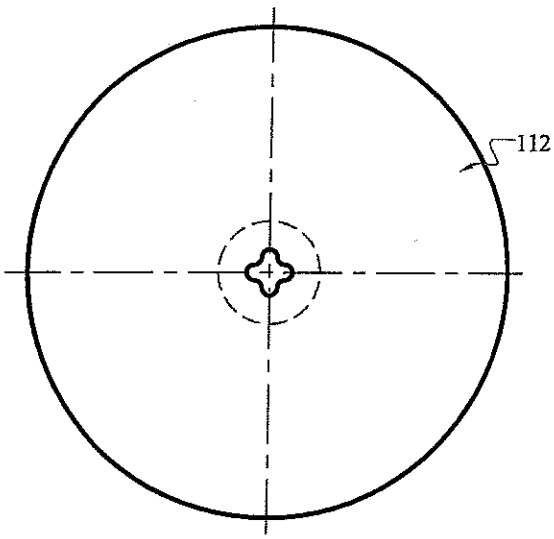

FIG 5 C

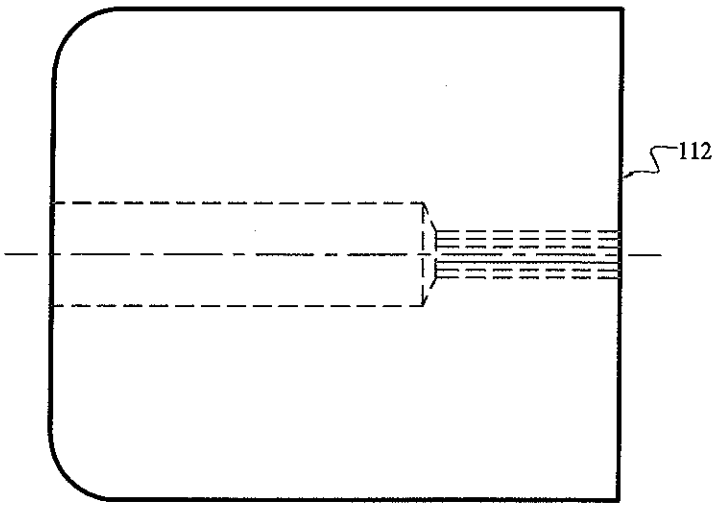

FIG 5 E

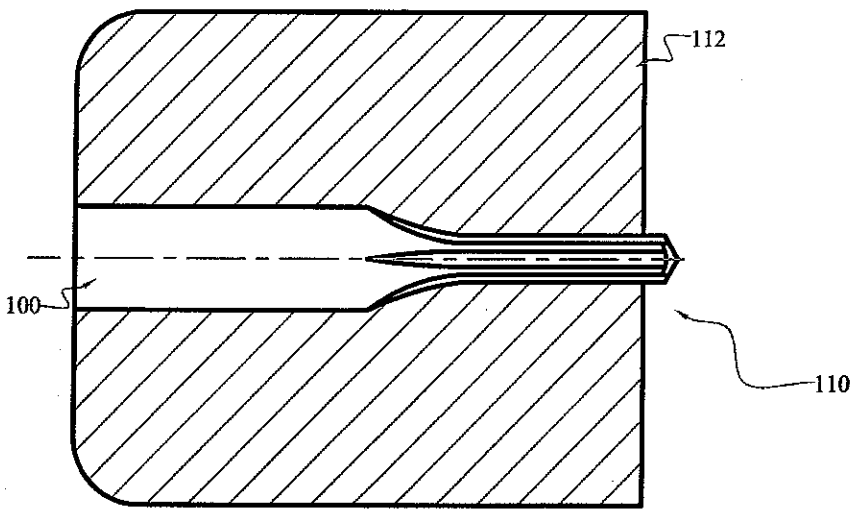

FIG 5 F

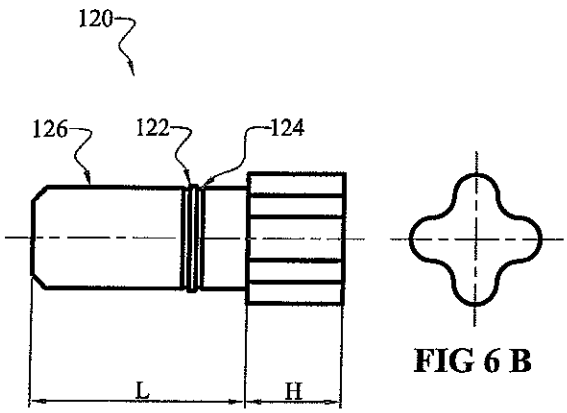

FIG 6 A

FIG 6 B

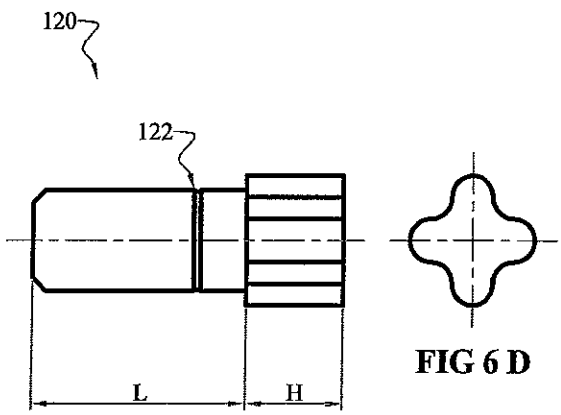

FIG 6 C

FIG 6 D

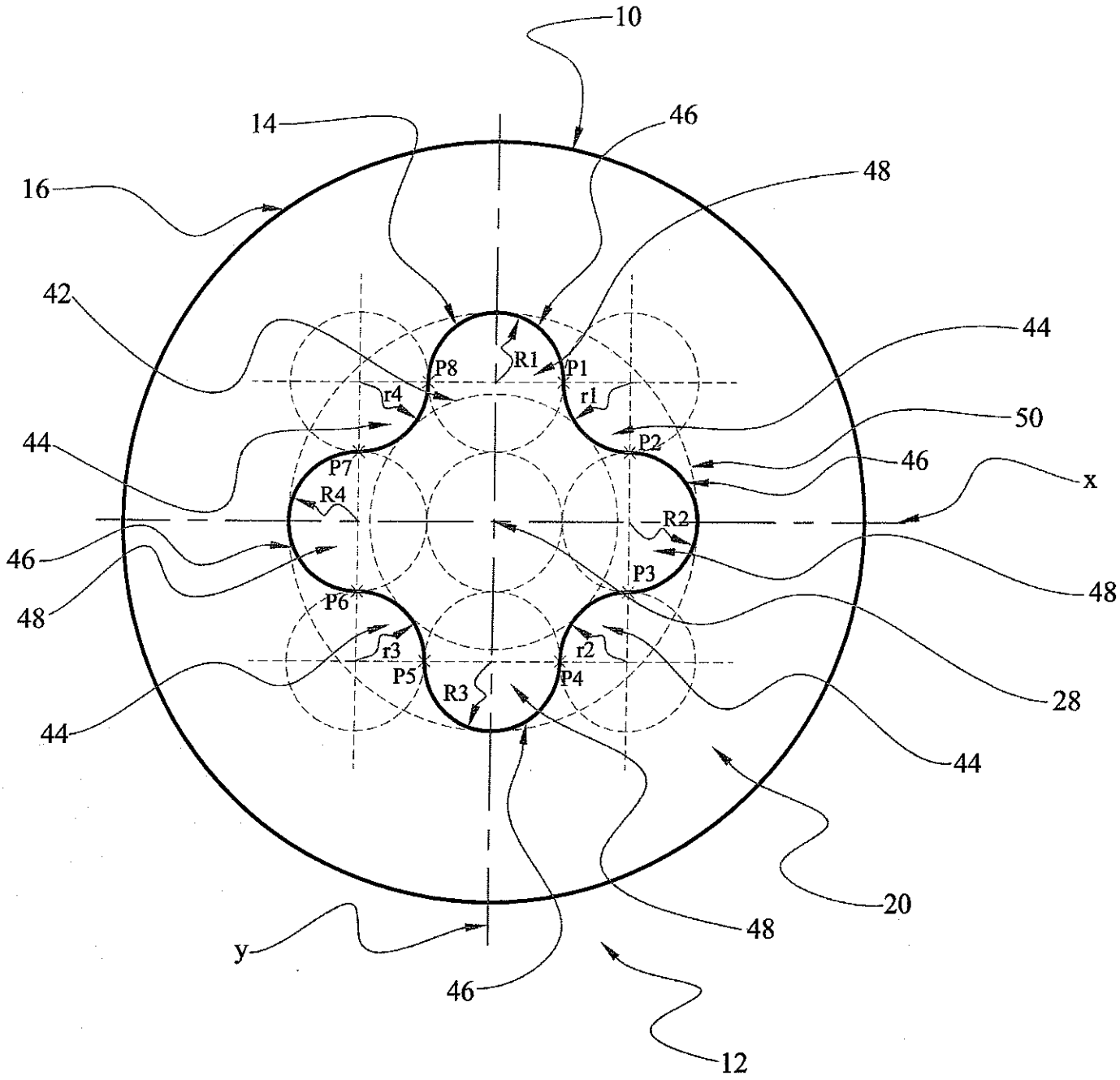
10
14
46
16
48
42
44
P8
R1
P1
r4
r1
50
44
P2
P7
46
x
R4
R2
46
P3
48
48
P6
r3
r2
P5
R3
P4
28
44
44
20
48
y
46
12

FIG 7 A

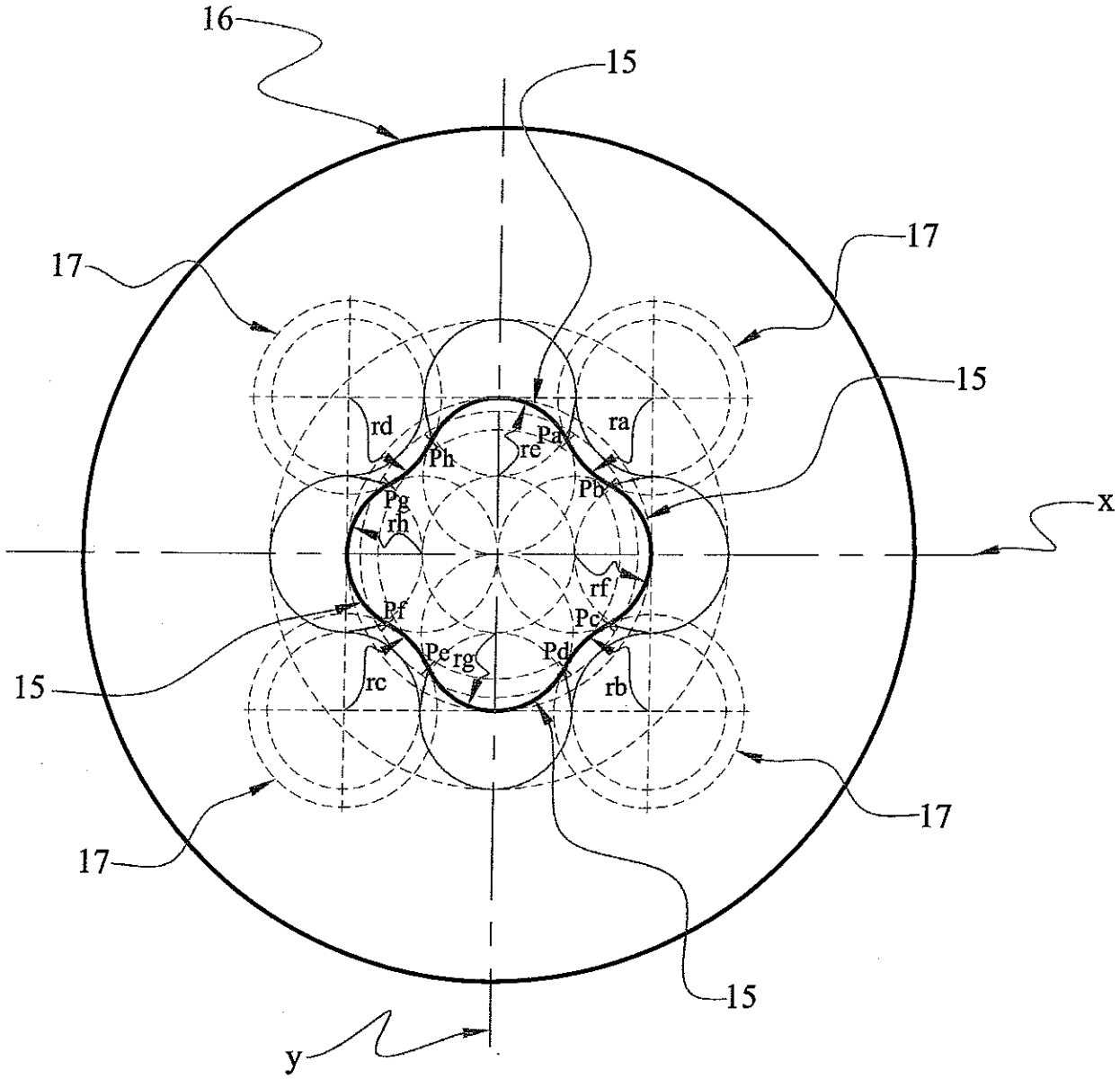
16
15
17
17
15
x
rd
Ph
re
Pa
ra
Pb
Pg
rh
rf
Pf
Pc
Pe
rg
Pd
rc
rb
15
17
17
15
y

FIG 7 B

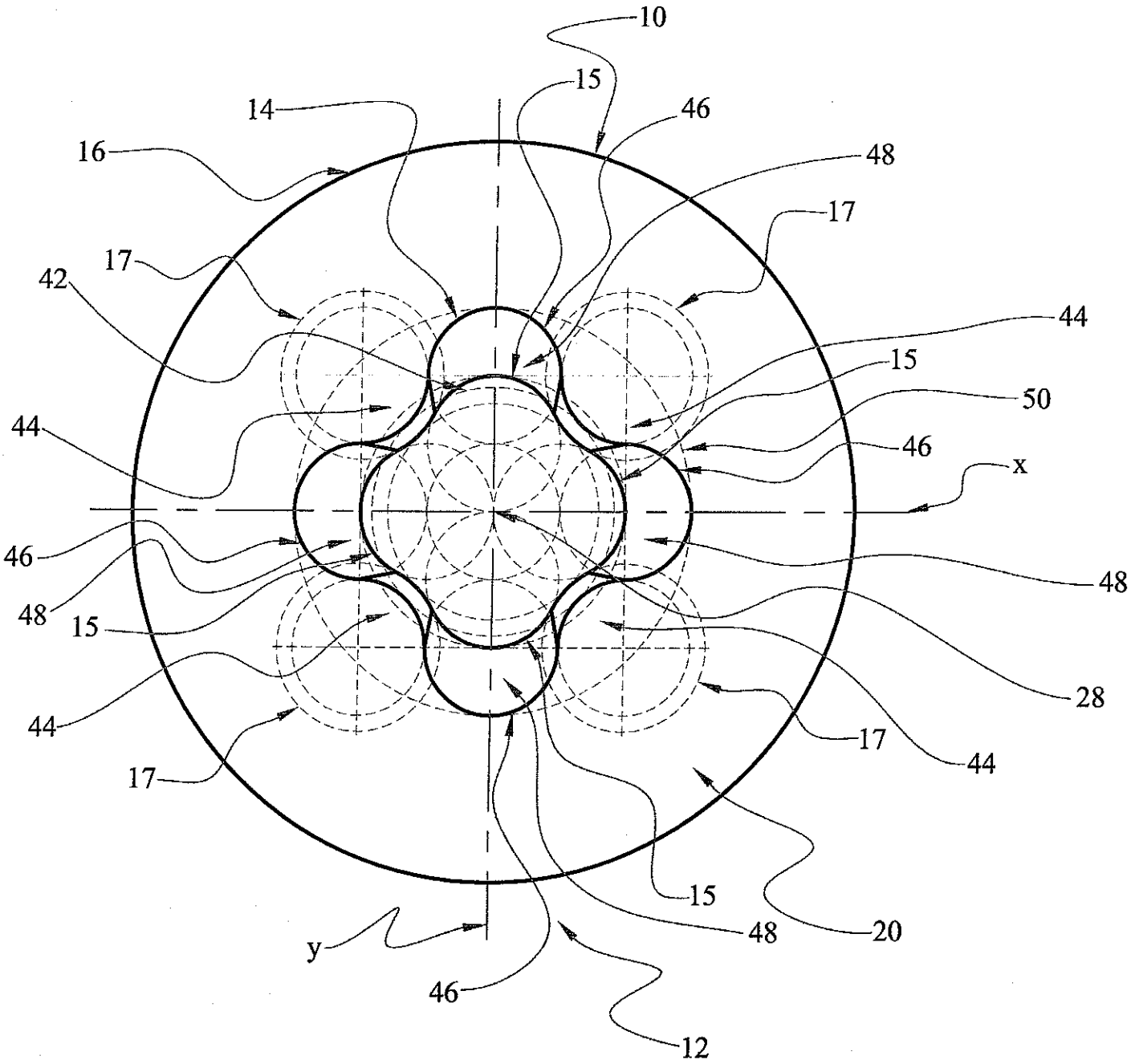
10
15
14
46
16
48
17
17
42
44
15
50
44
46
x
46
48
48
15
28
44
17
17
44
15
48
20
y
46
12

FIG 7 C

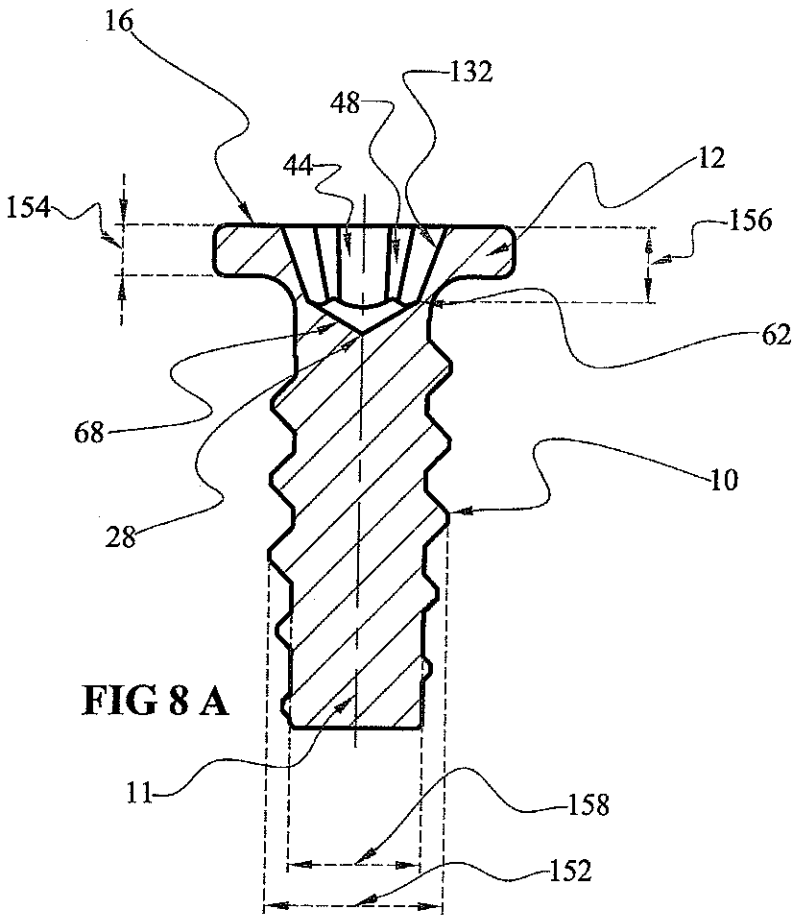

FIG 8 A

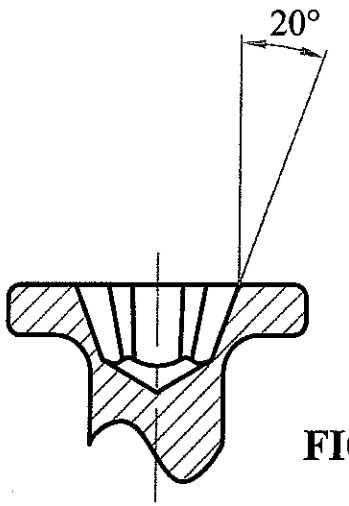

FIG 8 C

SECTION A-A

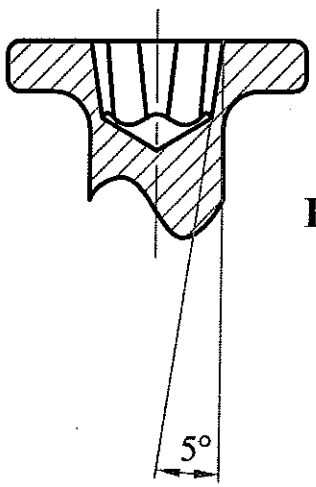

FIG 8 D

SECTION B-B

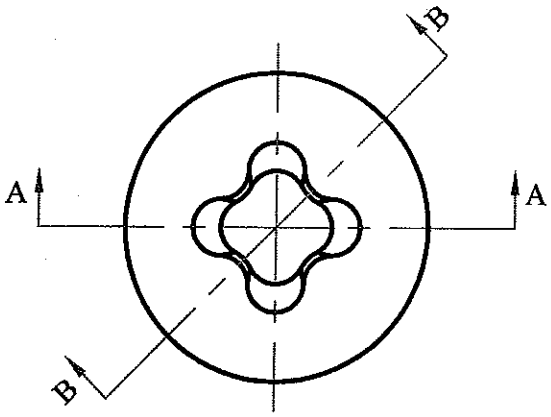

FIG 8 B

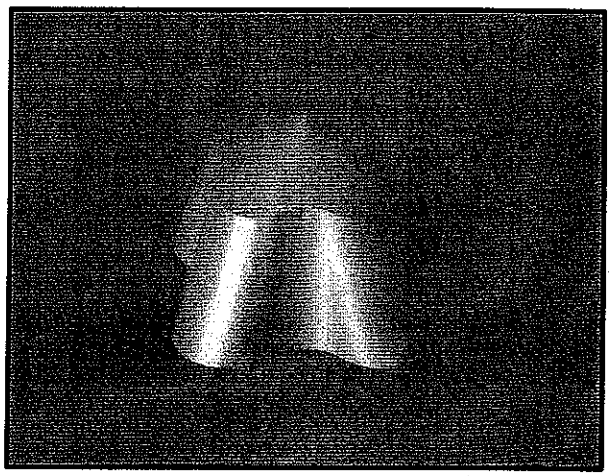

FIG 8 E

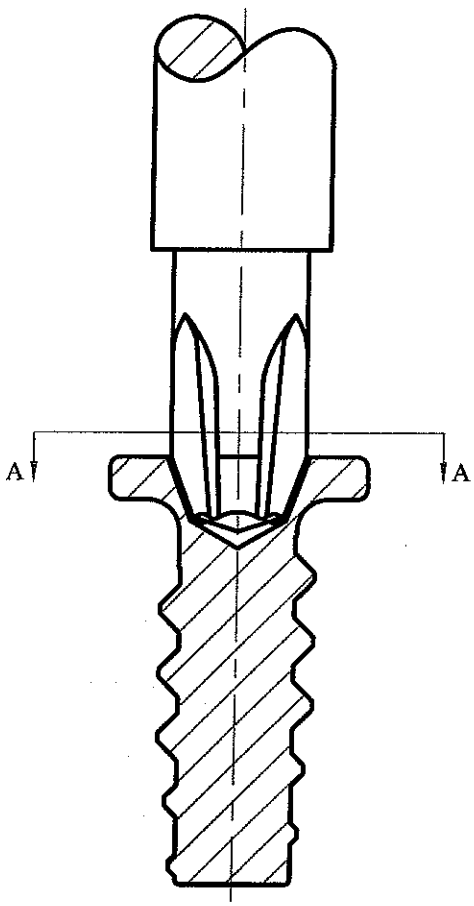

FIG 9 A

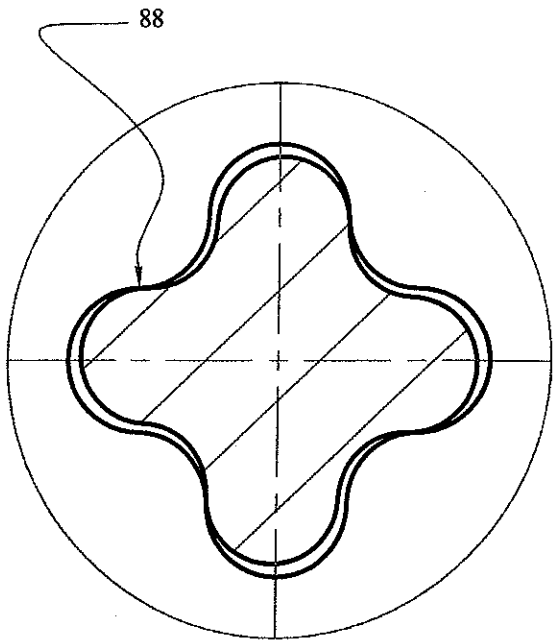

FIG 9 B

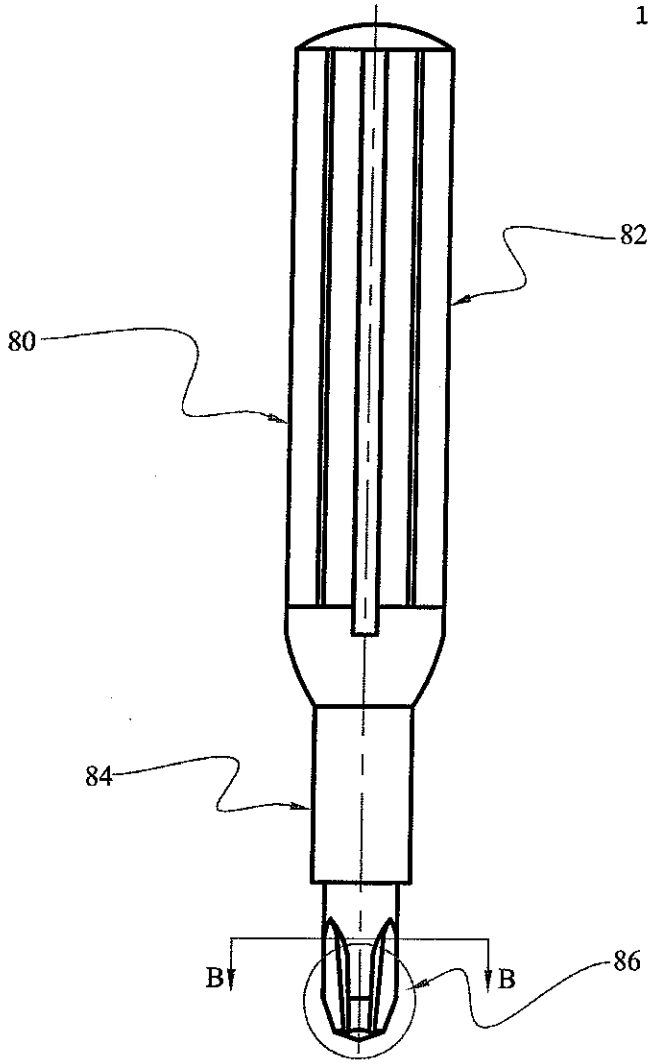

FIG 10 A

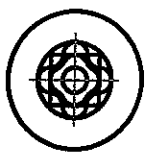

FIG 10 B

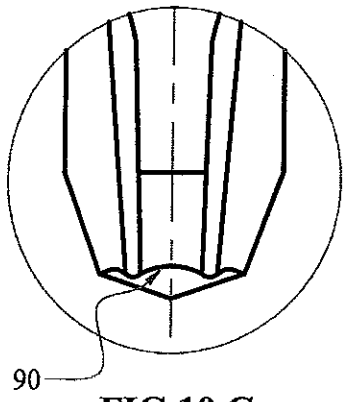

FIG 10 C

SECTION B-B

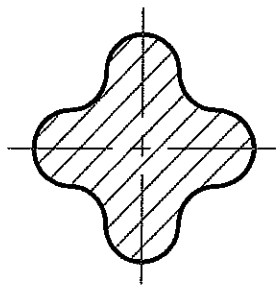

FIG 10 D

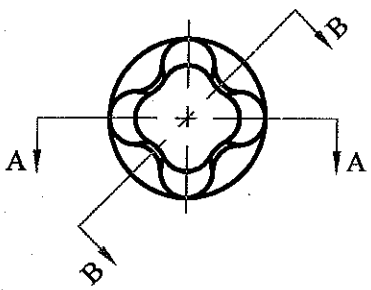

FIG 10 E

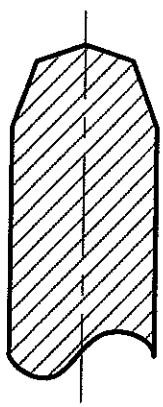

SECTION A-A

FIG 10 F

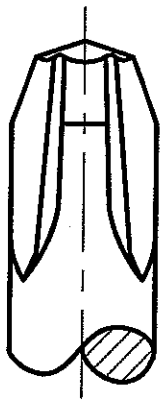

FIG 10 G

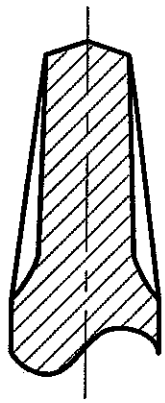

SECTION B-B

FIG 10 H

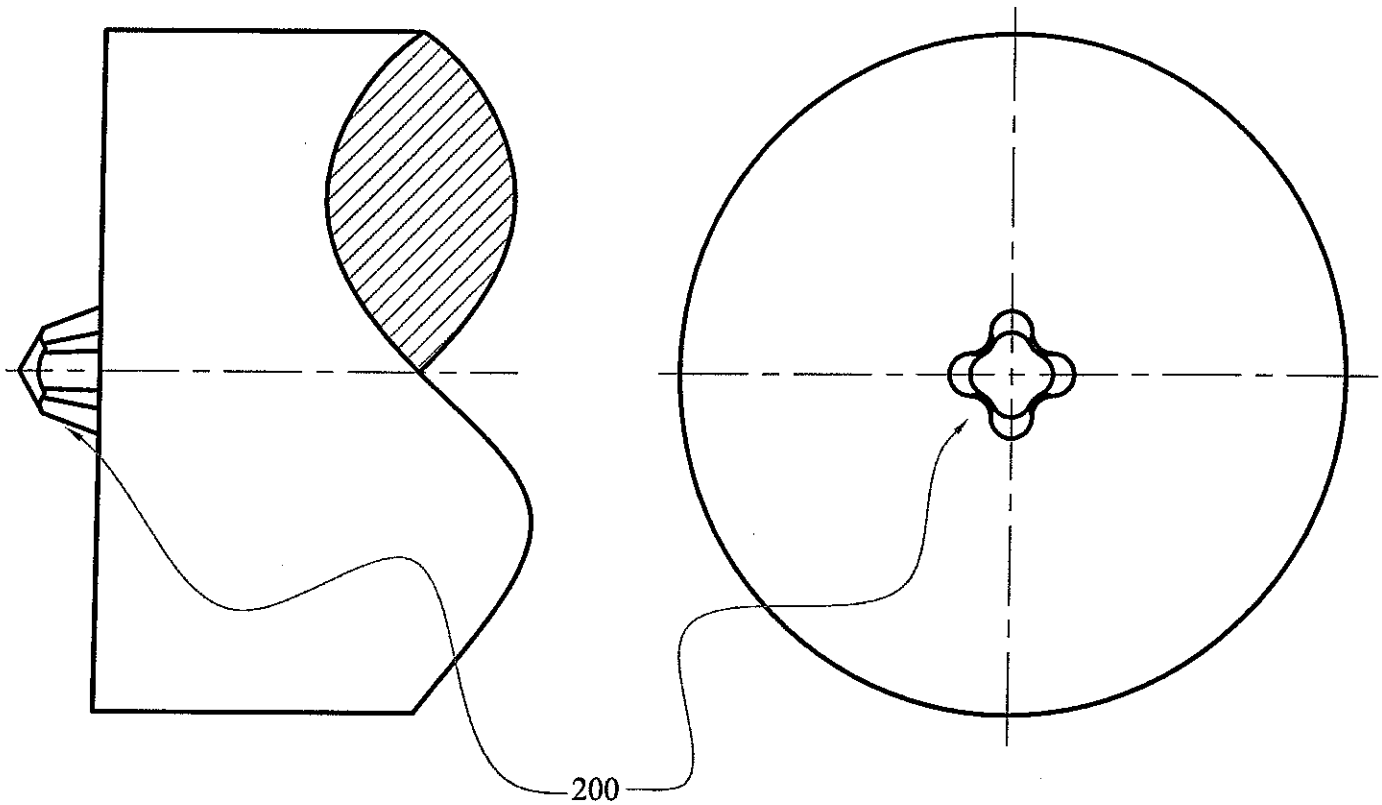

FIG 11 A

FIG 11 B

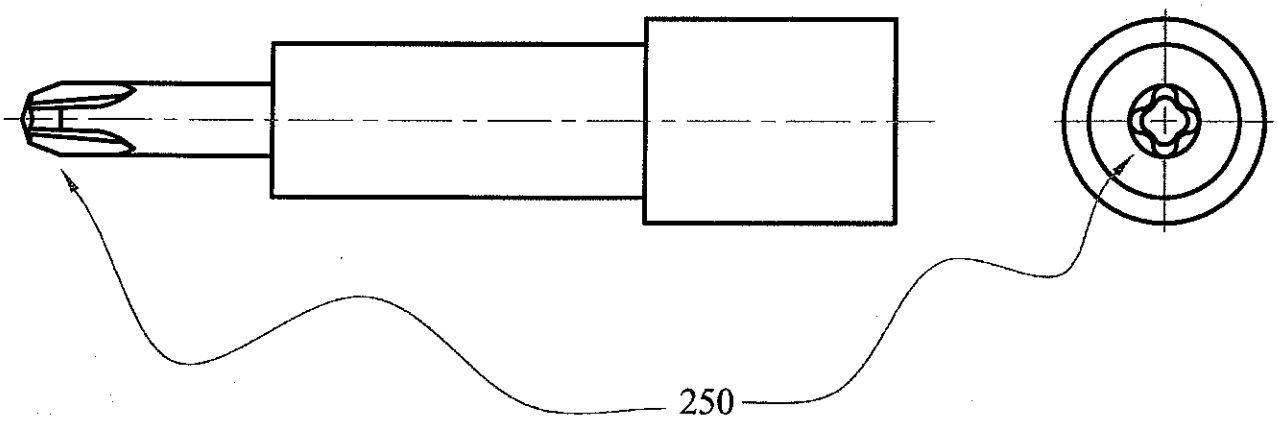

FIG 12 A

FIG 12 B