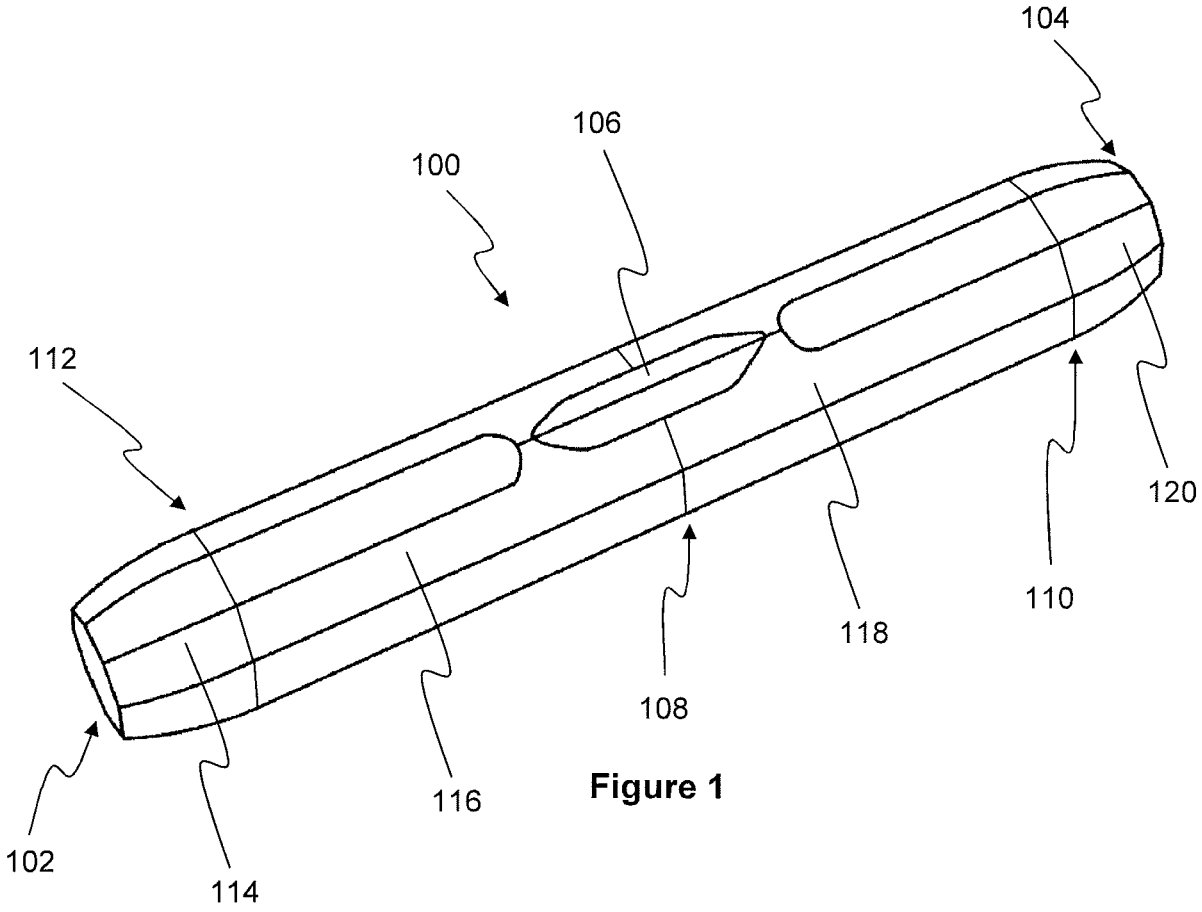

Figure 1

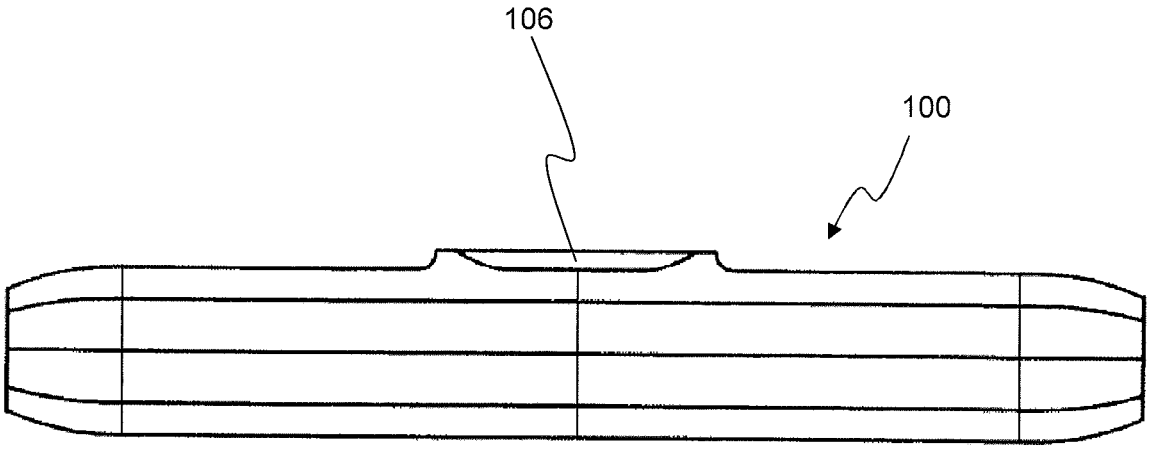

Figure 2

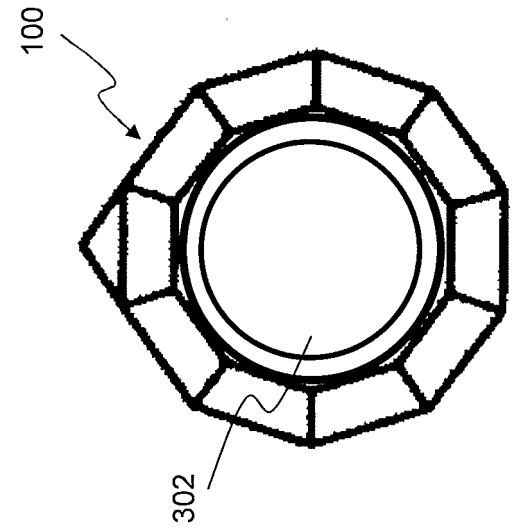

Figure 3(b)

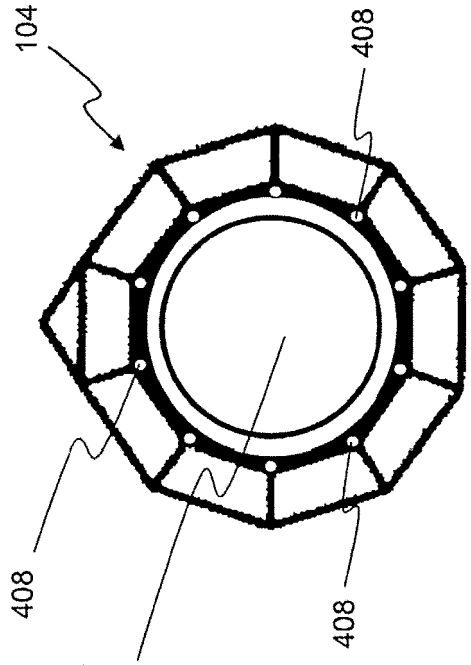

Figure 3(c)

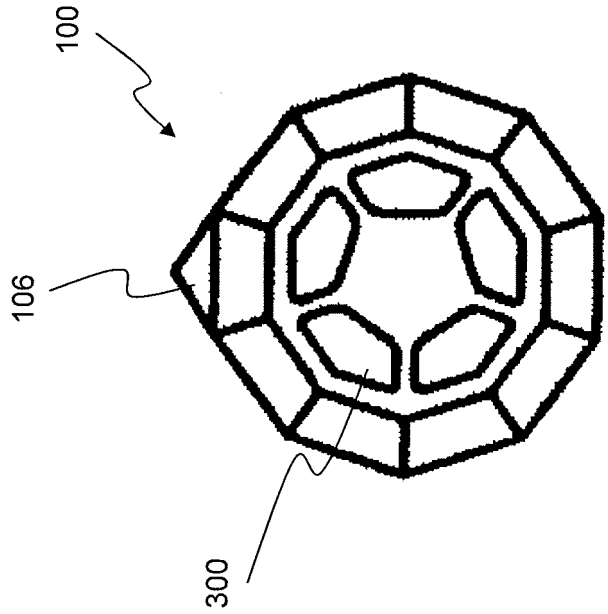

Figure 3(a)

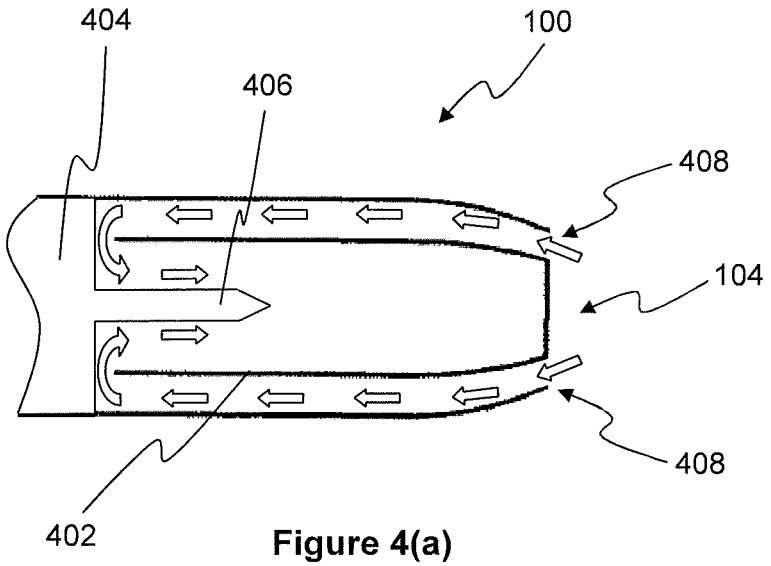

Figure 4(a)

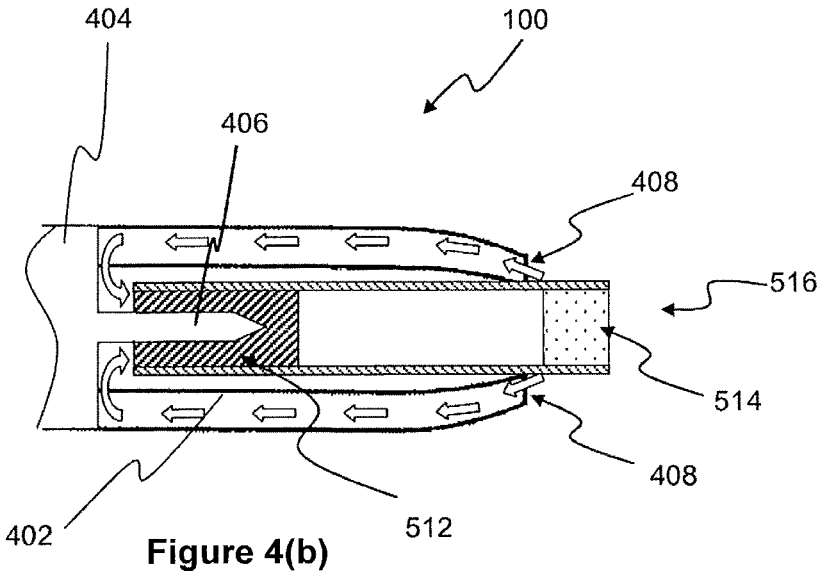

Figure 4(b)

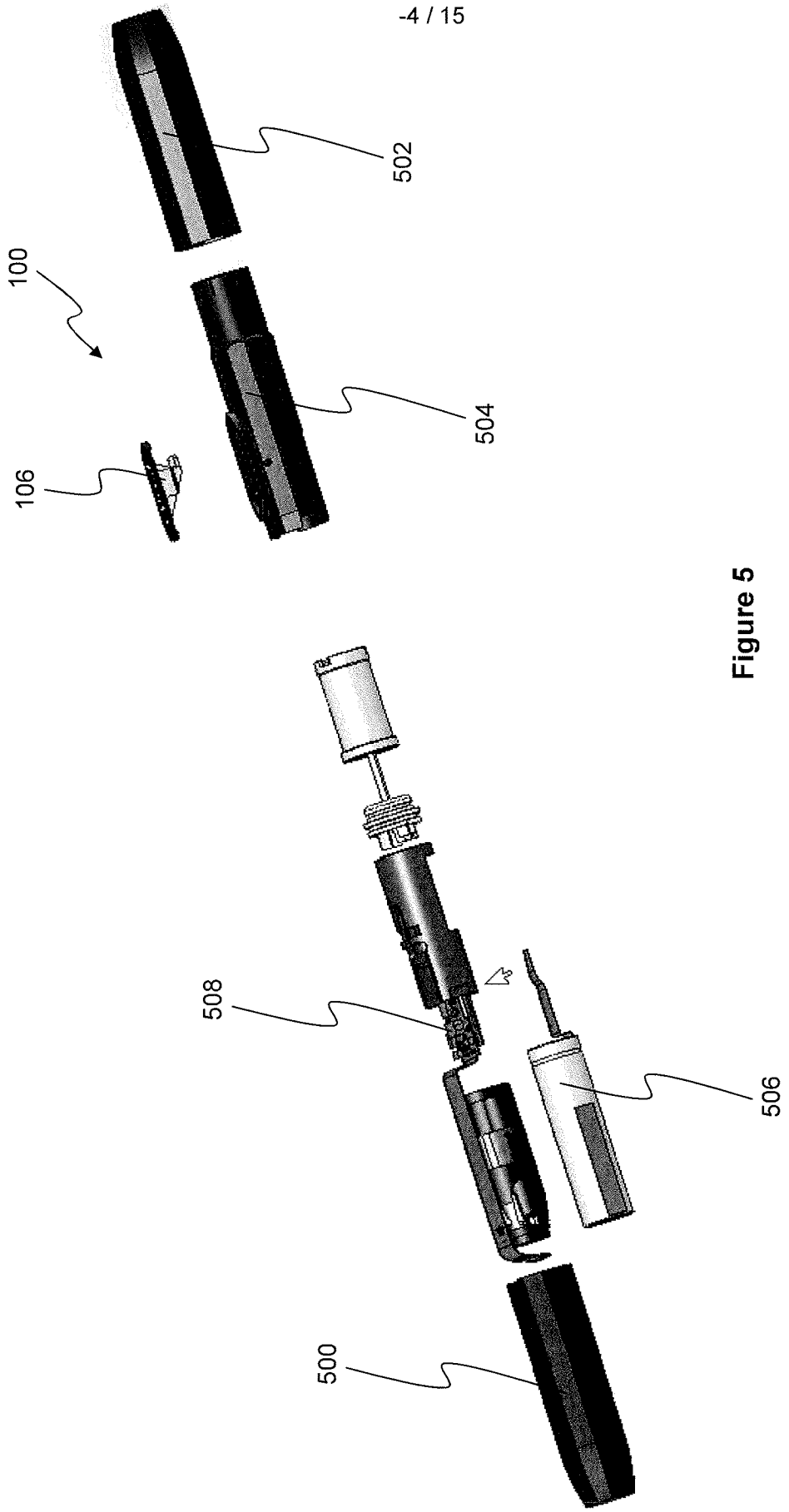

Figure 5

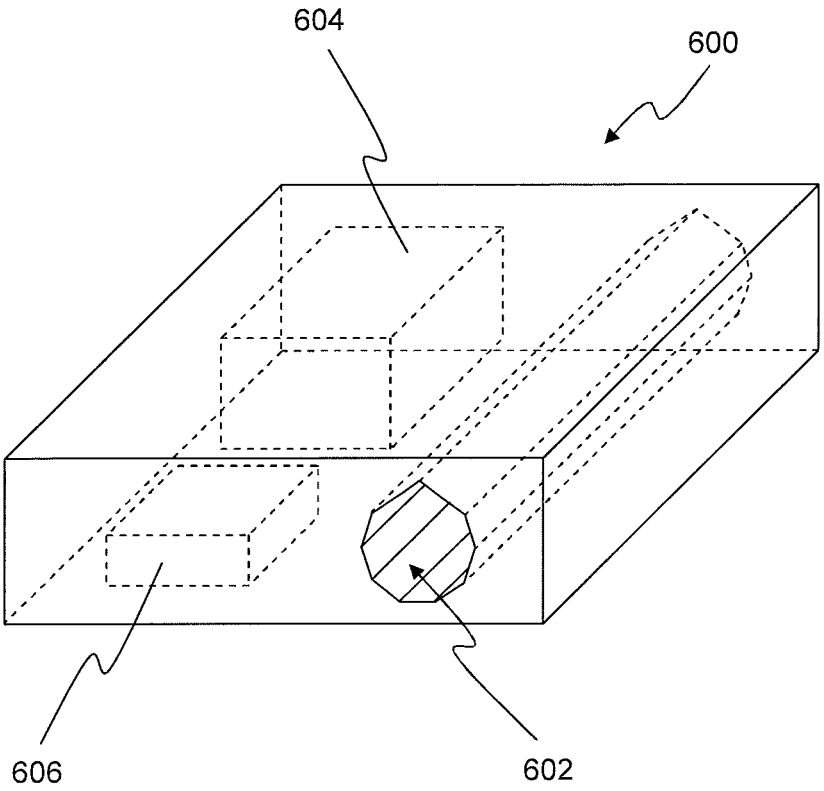

Figure 6(a)

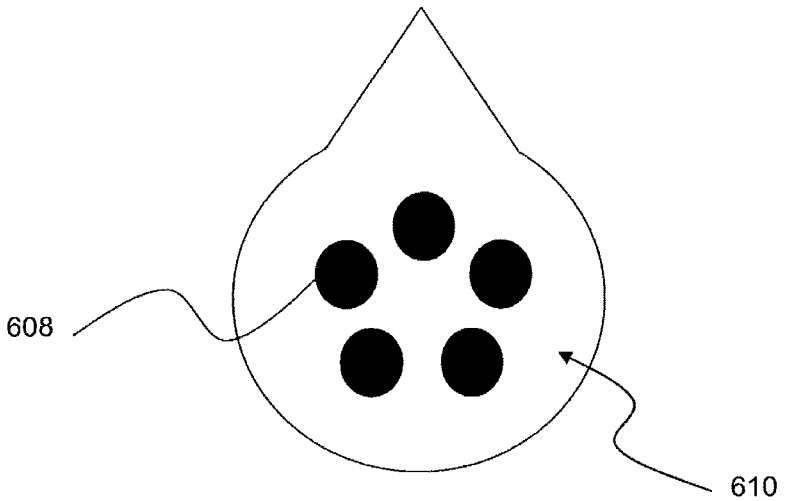

Figure 6(b)

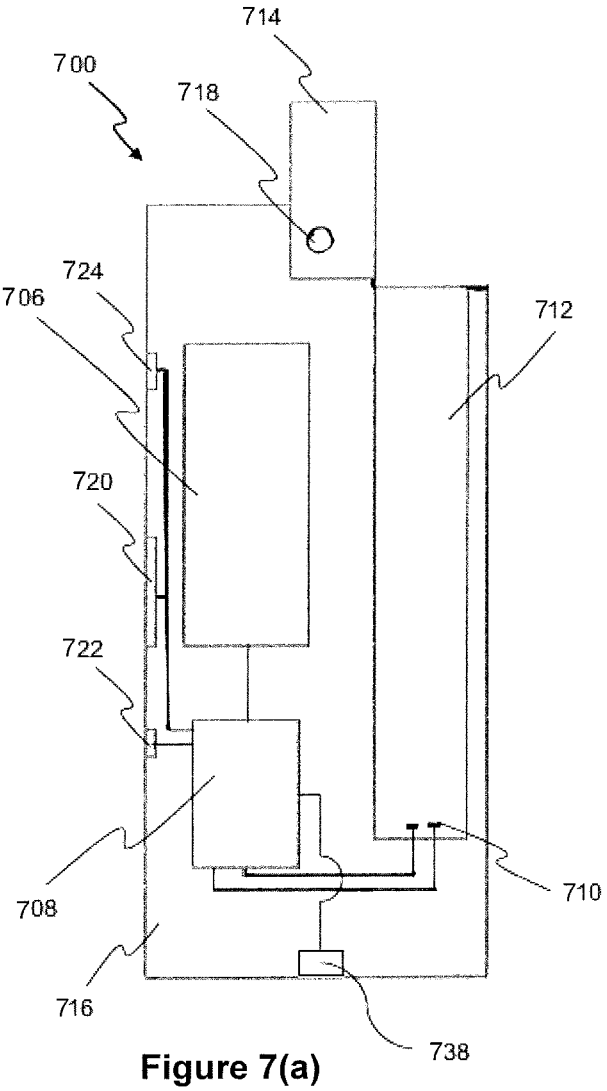

Figure 7(a)

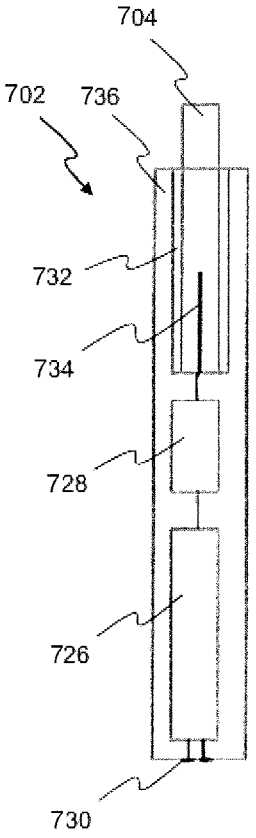

Figure 7(b)

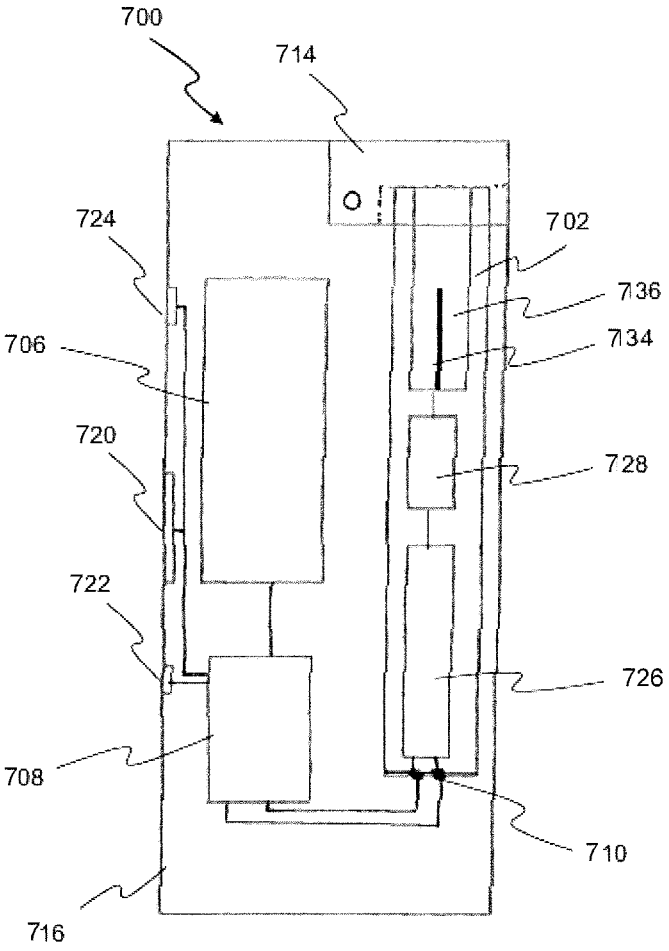

Figure 8

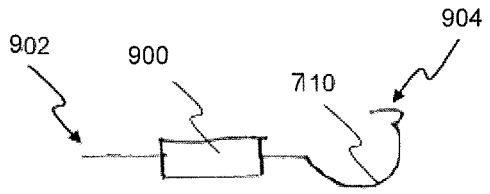

Figure 9

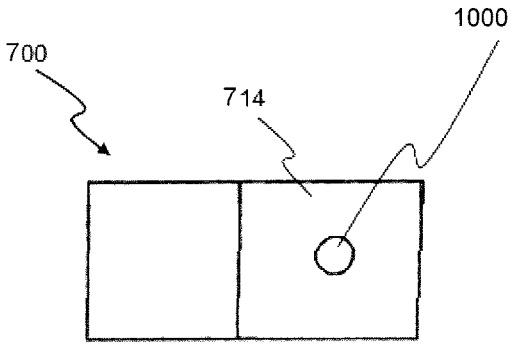

Figure 10

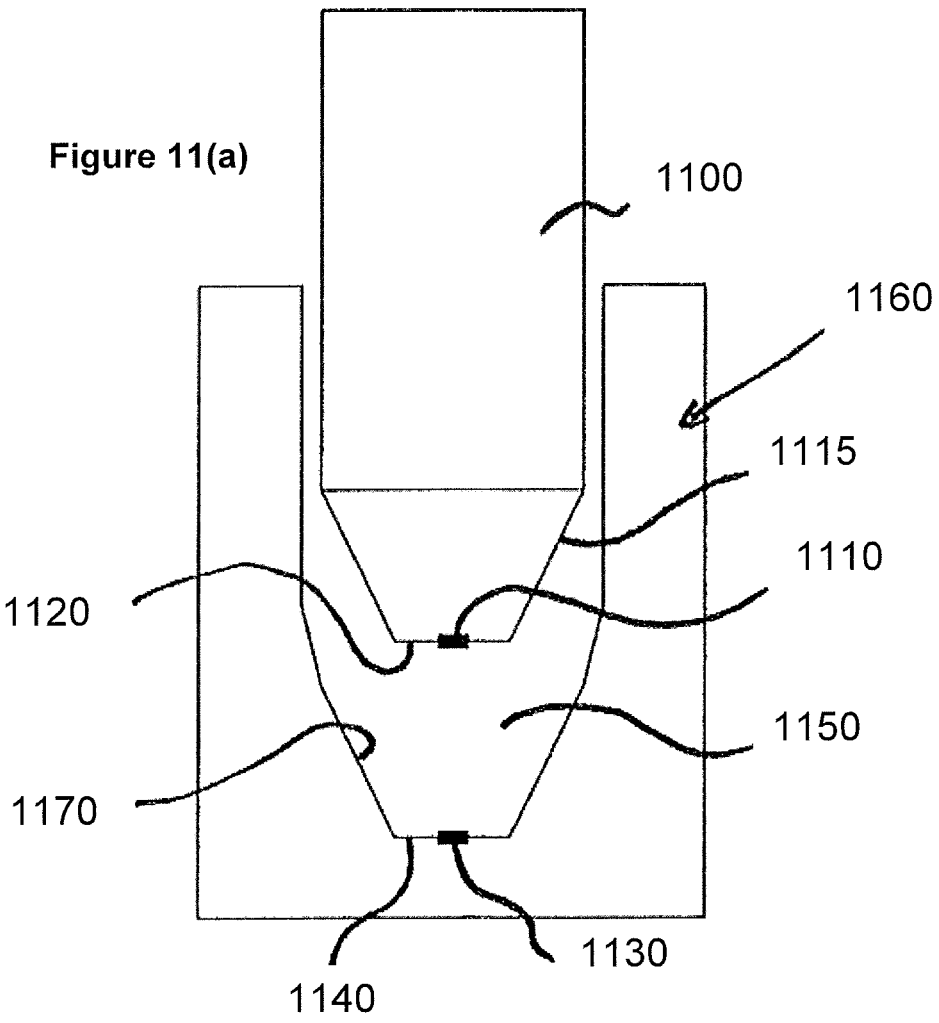

Figure 11(a)

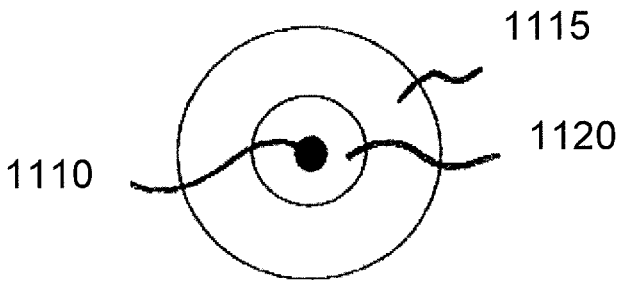

Figure 11(b)

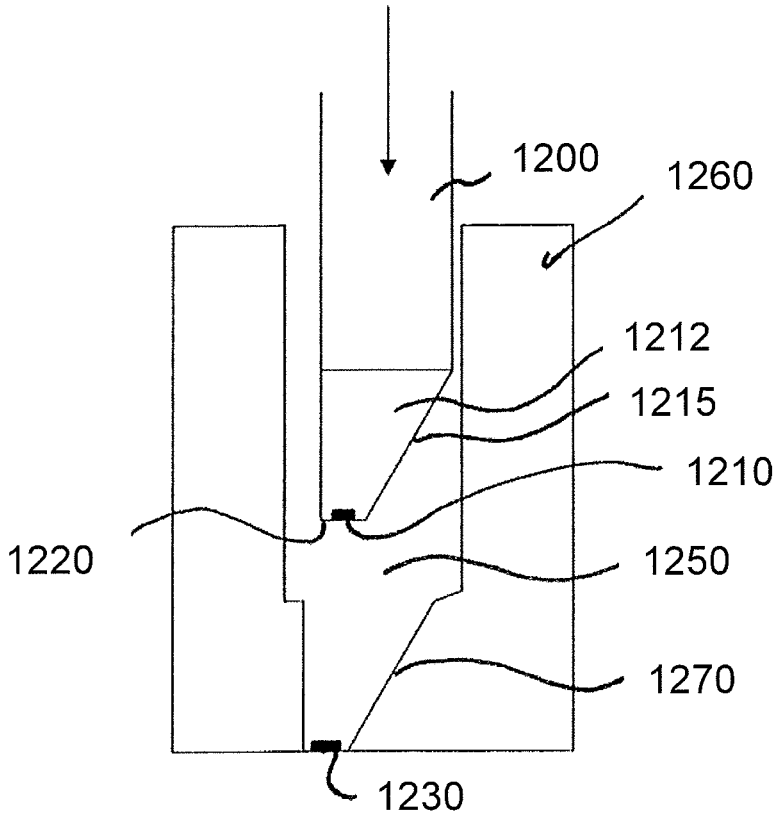

Figure 12(a)

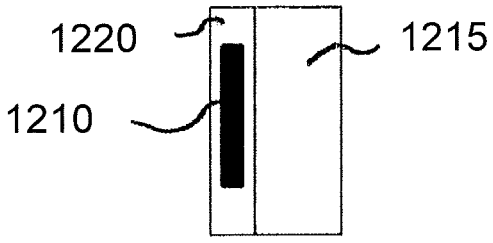

Figure 12(b)

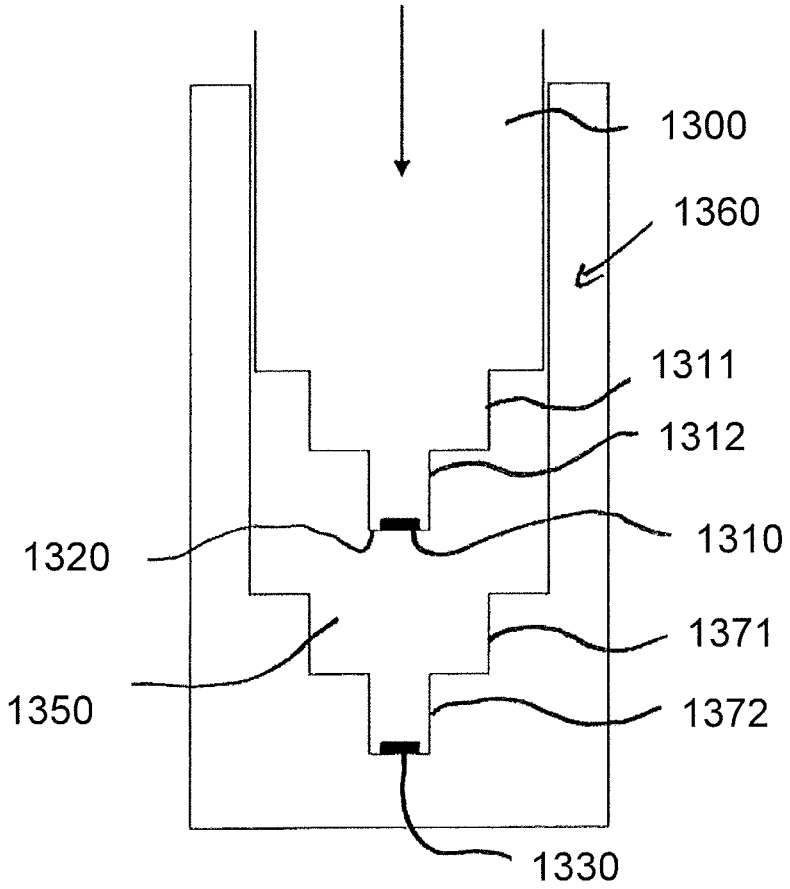

Figure 13(a)

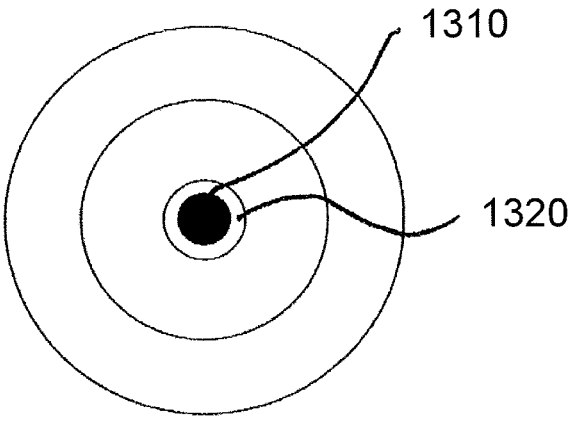

Figure 13(b)

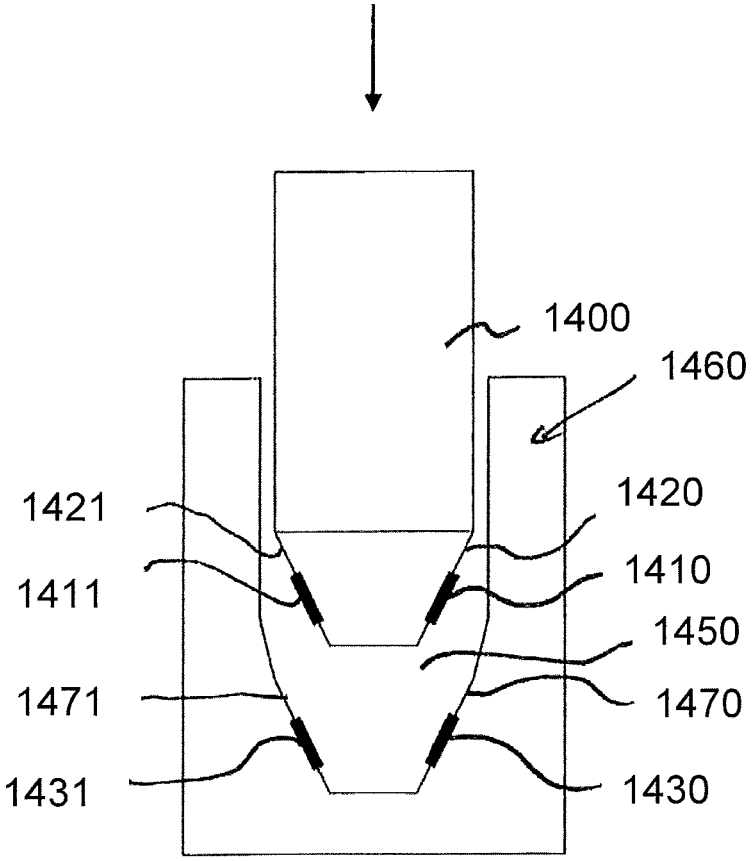

Figure 14(a)

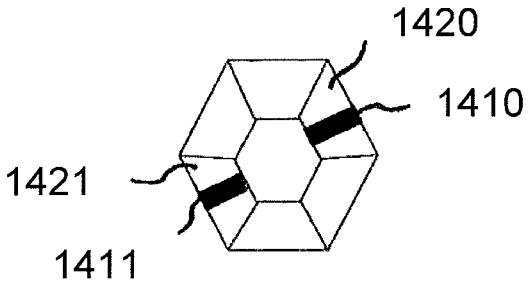

Figure 14(b)

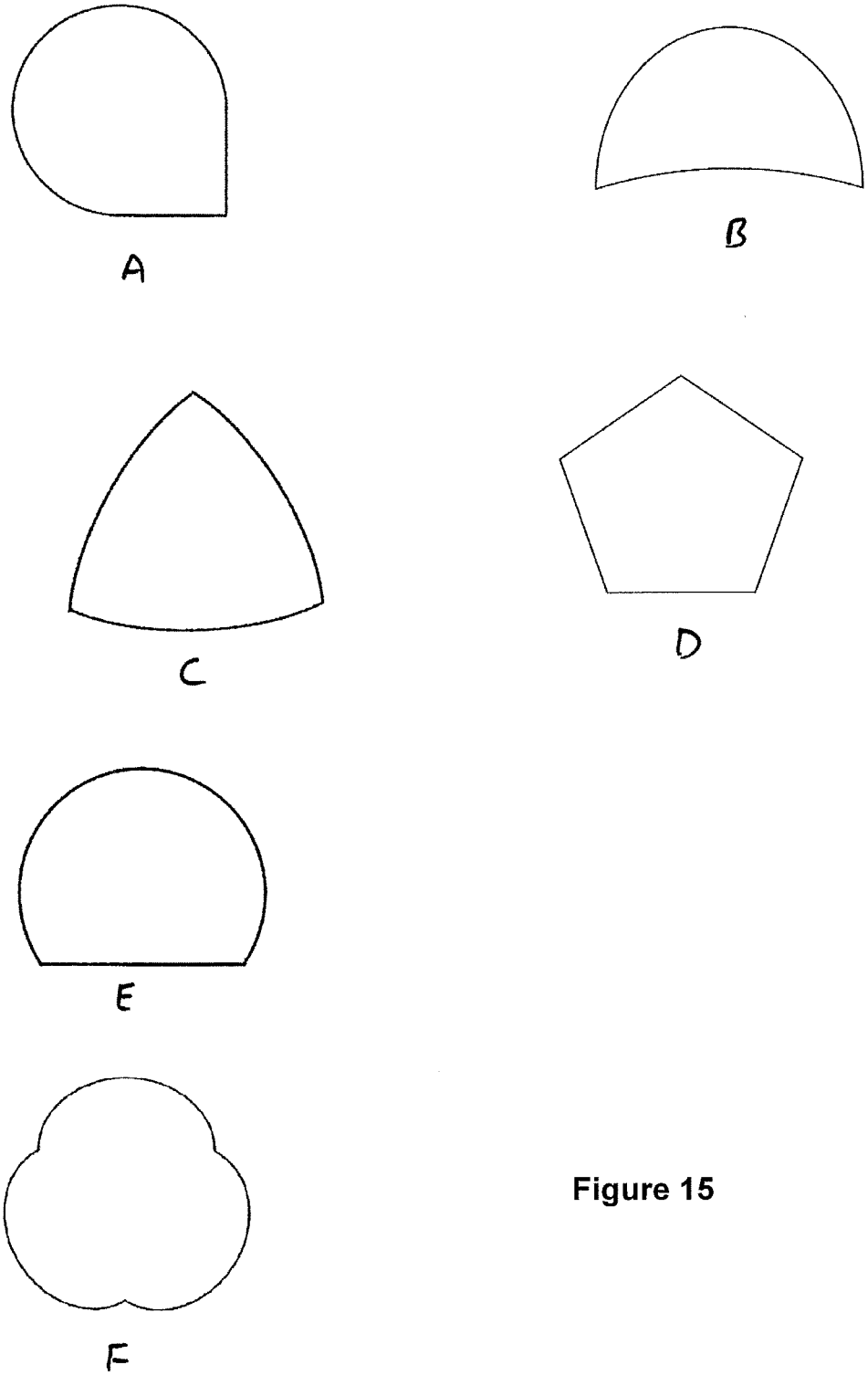

Figure 15

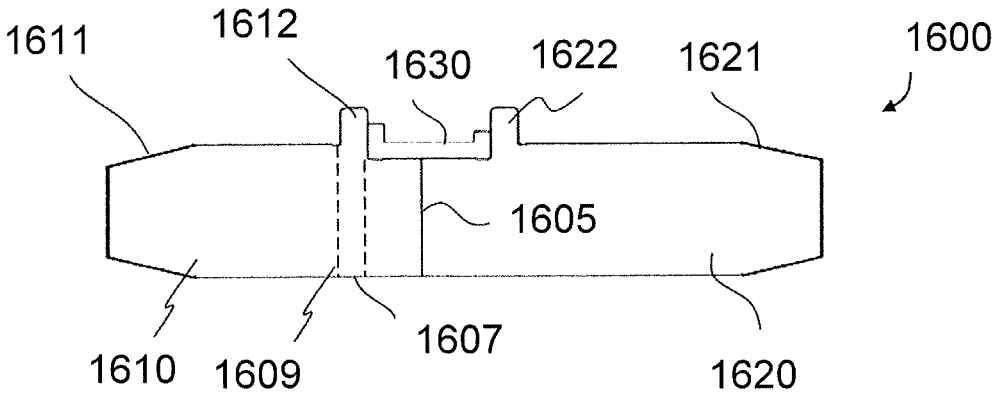

Figure 16

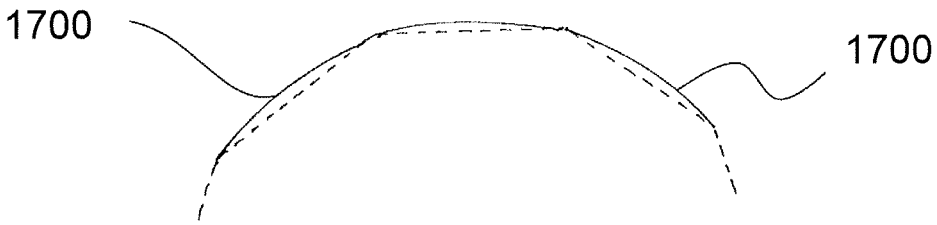

Figure 17

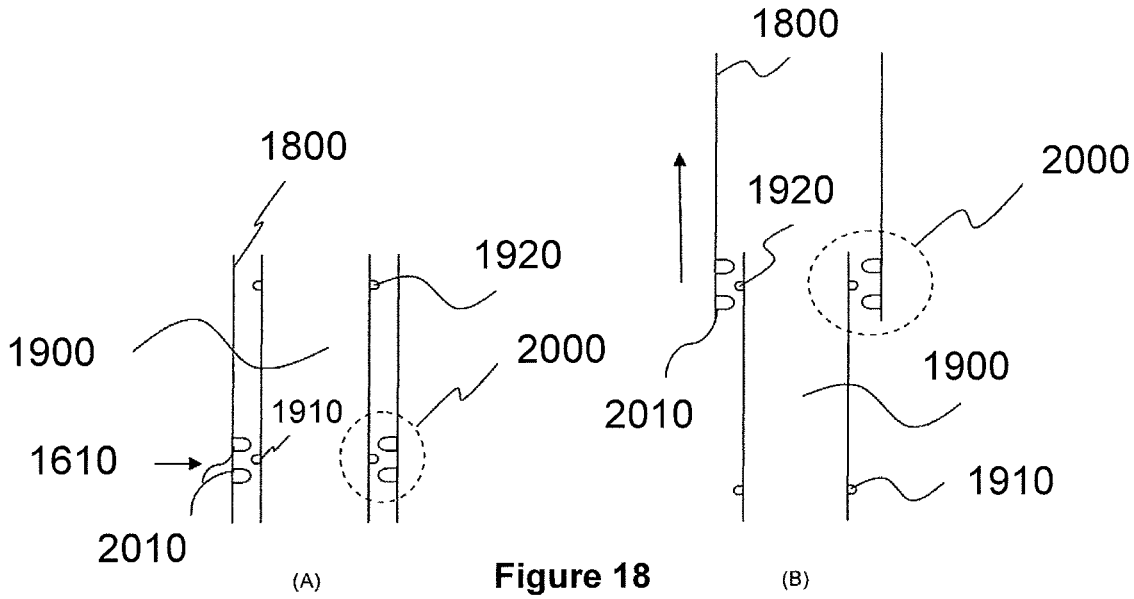

Figure 18

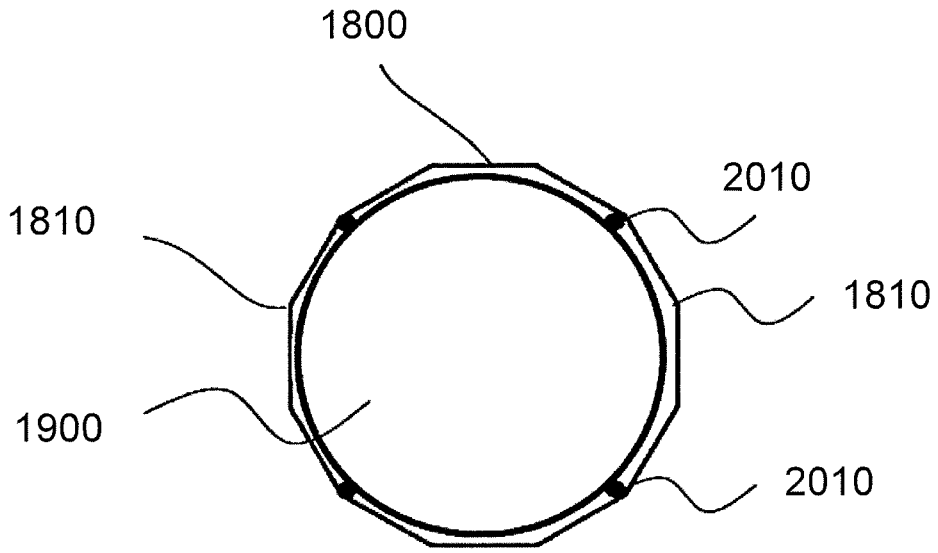

Figure 19