(12) INTERNATIONAL APPLICATION PUBLISHED UNDER THE PATENT COOPERATION TREATY (PCT)

(19) World Intellectual Property Organization
International Bureau

(43) International Publication Date
25 August 2022 (25.08.2022)

WIPO | PCT

(10) International Publication Number
WO 2022/177691 A1

(51) International Patent Classification:
H01L 21/683 (2006.01) *H01L 21/67* (2006.01)
H01L 21/687 (2006.01) *C23C 16/458* (2006.01)

(21) International Application Number:
PCT/US2022/013177

(22) International Filing Date:
20 January 2022 (20.01.2022)

(25) Filing Language: English

(26) Publication Language: English

(30) Priority Data:
17/181,977 22 February 2021 (22.02.2021) US

(71) Applicant: **APPLIED MATERIALS, INC.** [US/US]; 3050 Bowers Avenue, Santa Clara, CA 95054 (US).

(72) Inventor: **PARKHE, Vijay, D.**; 4054 Bouquet Park Lane, San Jose, CA 95135 (US).

(74) Agent: **BERNADICOU, Michael, A.** et al.; Schwabe, Williamson & Wyatt, P.C., 1211 SW 5th Avenue, Suite 1900, Portland, OR 97204 (US).

(81) Designated States *(unless otherwise indicated, for every kind of national protection available)*: AE, AG, AL, AM, AO, AT, AU, AZ, BA, BB, BG, BH, BN, BR, BW, BY, BZ, CA, CH, CL, CN, CO, CR, CU, CZ, DE, DJ, DK, DM, DO, DZ, EC, EE, EG, ES, FI, GB, GD, GE, GH, GM, GT, HN, HR, HU, ID, IL, IN, IR, IS, IT, JO, JP, KE, KG, KH, KN, KP, KR, KW, KZ, LA, LC, LK, LR, LS, LU, LY, MA, MD, ME, MG, MK, MN, MW, MX, MY, MZ, NA, NG, NI, NO, NZ, OM, PA, PE, PG, PH, PL, PT, QA, RO, RS, RU, RW, SA, SC, SD, SE, SG, SK, SL, ST, SV, SY, TH, TJ, TM, TN, TR, TT, TZ, UA, UG, US, UZ, VC, VN, WS, ZA, ZM, ZW.

(84) Designated States *(unless otherwise indicated, for every kind of regional protection available)*: ARIPO (BW, GH, GM, KE, LR, LS, MW, MZ, NA, RW, SD, SL, ST, SZ, TZ, UG, ZM, ZW), Eurasian (AM, AZ, BY, KG, KZ, RU, TJ, TM), European (AL, AT, BE, BG, CH, CY, CZ, DE, DK, EE, ES, FI, FR, GB, GR, HR, HU, IE, IS, IT, LT, LU, LV, MC, MK, MT, NL, NO, PL, PT, RO, RS, SE, SI, SK, SM,

(54) **Title:** ELECTROSTATIC CHUCK WITH DIFFERENTIATED CERAMICS

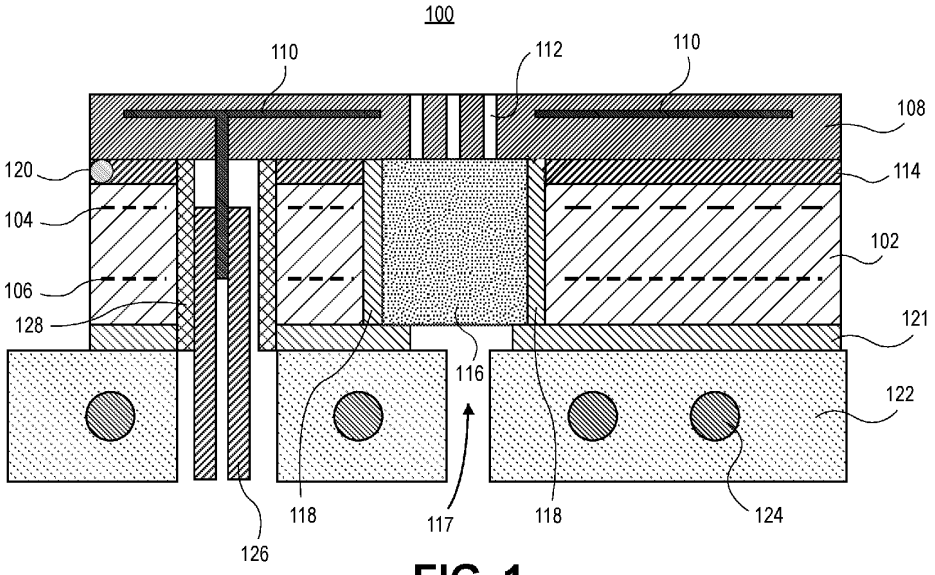

FIG. 1

(57) **Abstract:** Electrostatic chucks (ESCs) for reactor or plasma processing chambers, and methods of fabricating ESCs, are described. In an example, a substrate support assembly includes a ceramic bottom plate having heater elements therein, the ceramic bottom plate composed of alumina having a first purity. The substrate support assembly also includes a ceramic top plate having an electrode therein, the ceramic top plate composed of alumina having a second purity higher than the first purity. A bond layer is between the ceramic top plate and the ceramic bottom plate. The ceramic top plate is in direct contact with the bond layer, and the bond layer is in direct contact with the ceramic bottom plate.

WO 2022/177691 A1

[Continued on next page]

TR), OAPI (BF, BJ, CF, CG, CI, CM, GA, GN, GQ, GW, KM, ML, MR, NE, SN, TD, TG).

Published:

— *with international search report (Art. 21(3))*