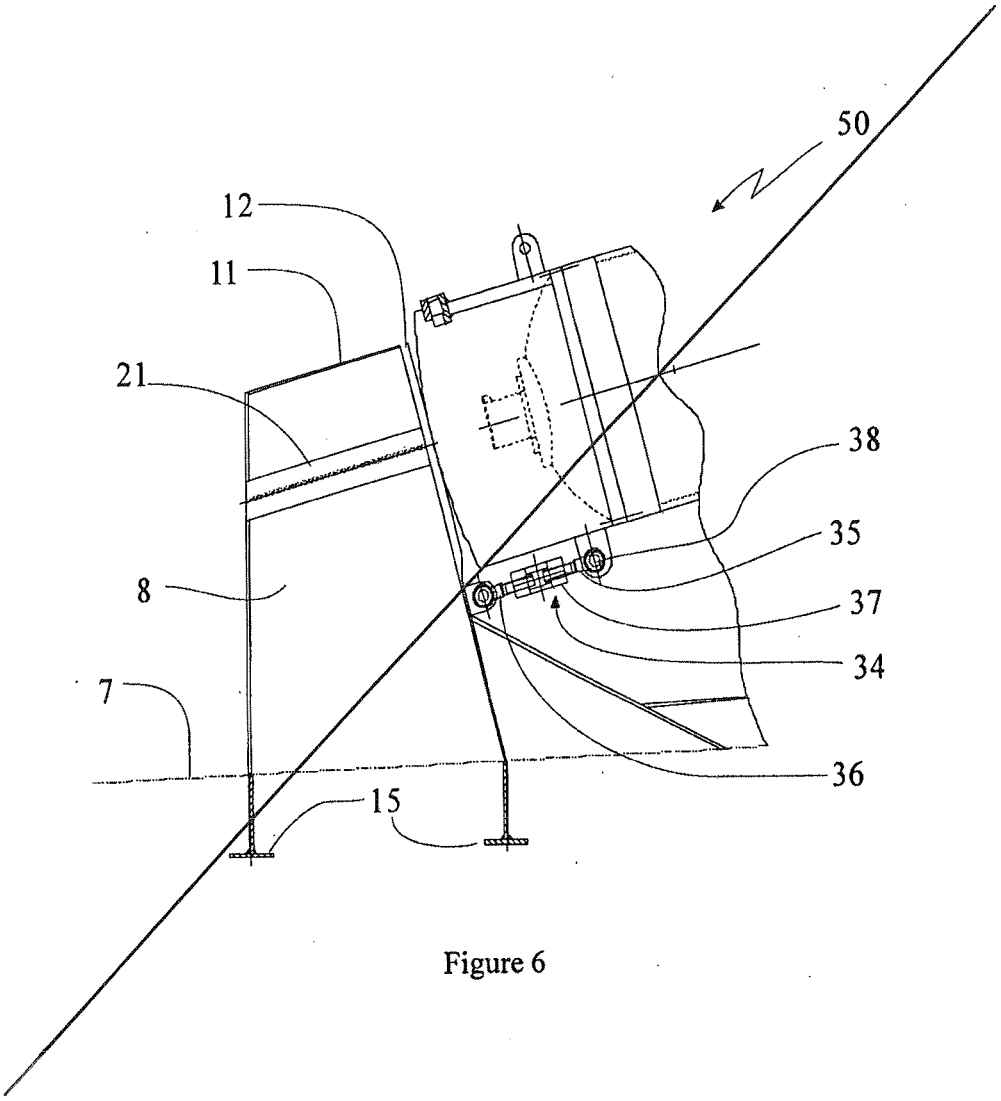

Figure 6

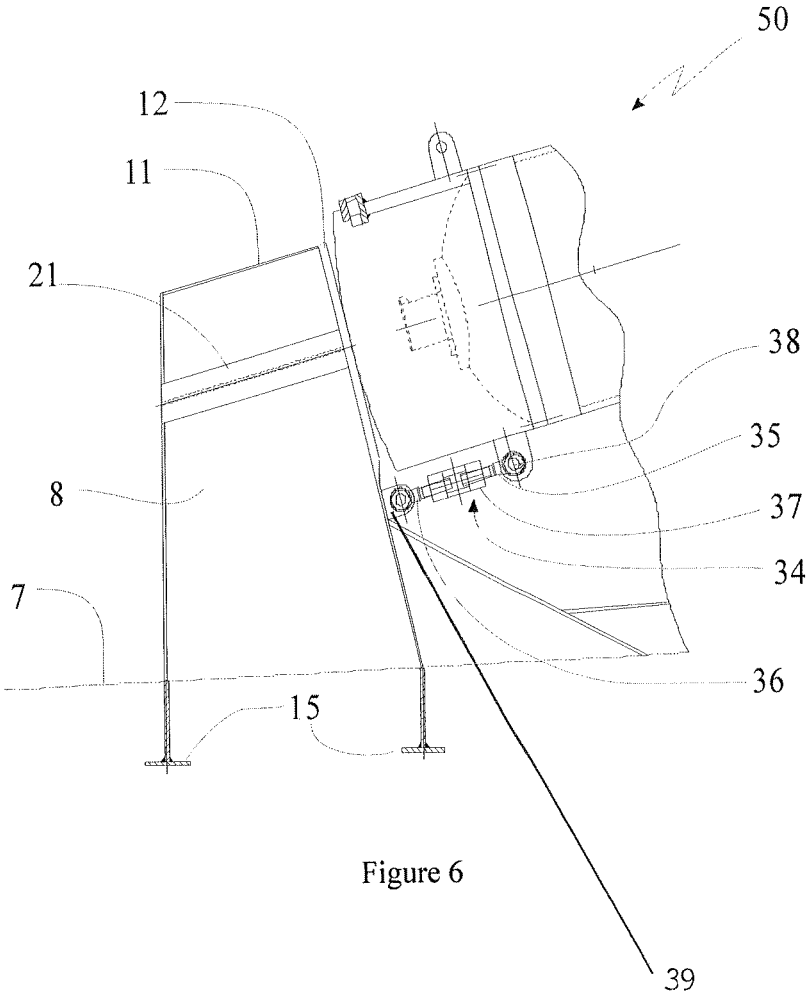

Figure 6