(12) INTERNATIONAL APPLICATION PUBLISHED UNDER THE PATENT COOPERATION TREATY (PCT)

(19) World Intellectual Property Organization
International Bureau

(43) International Publication Date
2 February 2012 (02.02.2012)

PCT

(10) International Publication Number
WO 2012/014047 A1

(51) International Patent Classification:
B01L 3/00 (2006.01)

(21) International Application Number:
PCT/IB2011/001735

(22) International Filing Date:
27 July 2011 (27.07.2011)

(25) Filing Language: English

(26) Publication Language: English

(30) Priority Data:
61/367,993 27 July 2010 (27.07.2010) US

(71) Applicant *(for all designated States except US)*: **IN-SPHERO AG** [CH/CH]; Technoparkstrasse 1, CH-8005 Zürich (CH).

(72) Inventors; and

(75) Inventors/Applicants *(for US only)*: **LICHTENBERG, Jan** [DE/CH]; Dahlienstrasse 17, CH-8103 Unterengstringen (CH). **MORITZ, Wolfgang** [CH/CH]; Obstgartenstrasse 32, CH-8303 Bassersdorf (CH). **KELM, Jens** [DE/CH]; Wolfswinkel 30, CH-8046 Zürich (CH).

(74) Agent: **SCHOELLHORN, Andreas**; Katzarov SA, Claraplatz 1, CH-4058 Basel (CH).

(81) Designated States *(unless otherwise indicated, for every kind of national protection available)*: AE, AG, AL, AM, AO, AT, AU, AZ, BA, BB, BG, BH, BR, BW, BY, BZ, CA, CH, CL, CN, CO, CR, CU, CZ, DE, DK, DM, DO, DZ, EC, EE, EG, ES, FI, GB, GD, GE, GH, GM, GT, HN, HR, HU, ID, IL, IN, IS, JP, KE, KG, KM, KN, KP, KR, KZ, LA, LC, LK, LR, LS, LT, LU, LY, MA, MD, ME, MG, MK, MN, MW, MX, MY, MZ, NA, NG, NI, NO, NZ, OM, PE, PG, PH, PL, PT, RO, RS, RU, SC, SD, SE, SG, SK, SL, SM, ST, SV, SY, TH, TJ, TM, TN, TR, TT, TZ, UA, UG, US, UZ, VC, VN, ZA, ZM, ZW.

(84) Designated States *(unless otherwise indicated, for every kind of regional protection available)*: ARIPO (BW, GH, GM, KE, LR, LS, MW, MZ, NA, SD, SL, SZ, TZ, UG, ZM, ZW), Eurasian (AM, AZ, BY, KG, KZ, MD, RU, TJ, TM), European (AL, AT, BE, BG, CH, CY, CZ, DE, DK, EE, ES, FI, FR, GB, GR, HR, HU, IE, IS, IT, LT, LU, LV, MC, MK, MT, NL, NO, PL, PT, RO, RS, SE, SI, SK, SM, TR), OAPI (BF, BJ, CF, CG, CI, CM, GA, GN, GQ, GW, ML, MR, NE, SN, TD, TG).

Declarations under Rule 4.17:

— *as to applicant's entitlement to apply for and be granted a patent (Rule 4.17(ii))*

— *of inventorship (Rule 4.17(iv))*

Published:

— *with international search report (Art. 21(3))*

— *before the expiration of the time limit for amending the claims and to be republished in the event of receipt of amendments (Rule 48.2(h))*

(54) Title: COMPLIANT MULTI-WELL PLATE

Figure 7

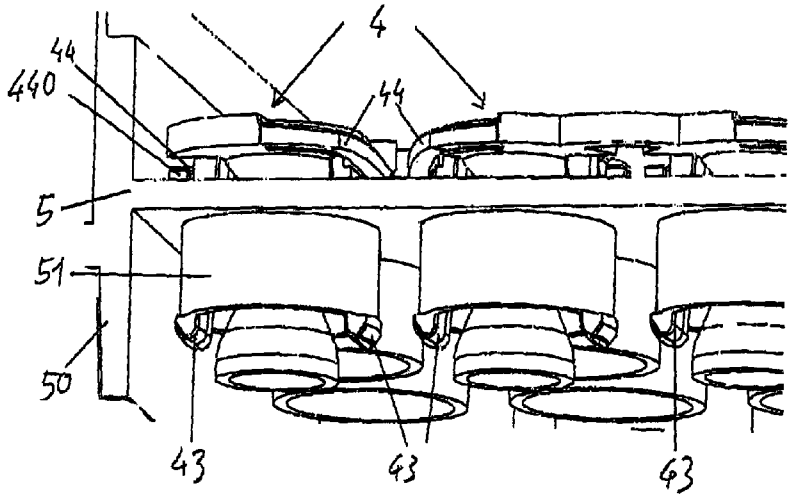

(57) Abstract: Multi-well plate (1) comprising a plurality of wells (4), a frame (5) for holding the plurality of wells (4) in a defined arrangement, a support element (50) for contacting a surface when the multi-well plate (1) is placed on the surface, wherein at least one well (4) of the plurality of wells is elastically displaceable relative to said support element (50).

WO 2012/014047 A1