Fig.1

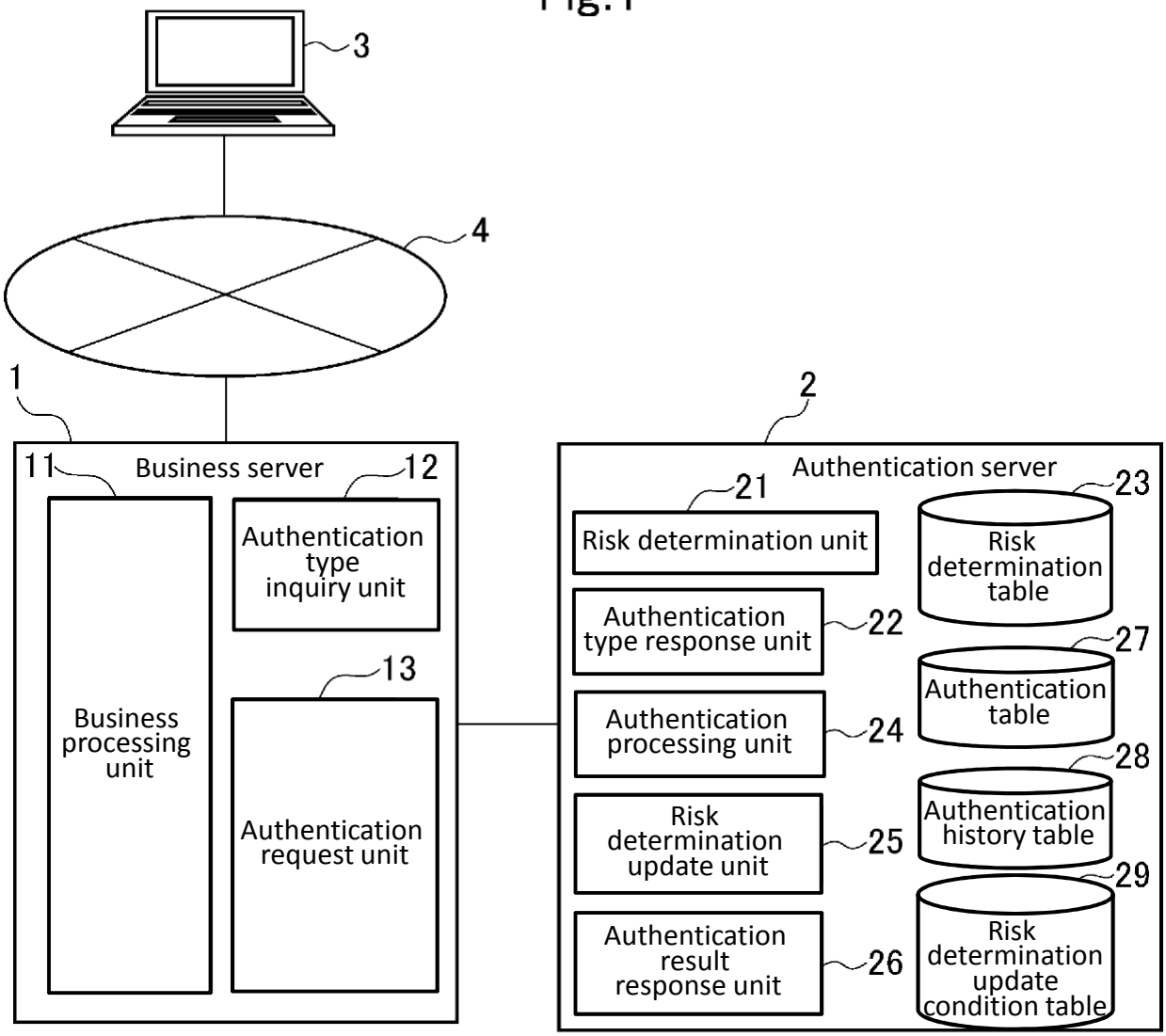

Fig.2

Access history		Terminal information		
Access date and time	IP address	OS information	Browser information	CPU information
• • •	• • •	• • •	• • •	• • •
⋮	⋮	⋮	⋮	⋮

Fig.3

Update condition	Update process
When authentication requests with respect to X1 or more of user IDs are made from same IP address within prescribed time and all authentication requests result in authentication failure	Add IP address to IP address list in risk determination table
When authentication requests with respect to X2 or more of user IDs are made from same IP address within prescribed time	Add IP address to IP address list in risk determination table
⋮	⋮

Fig.4

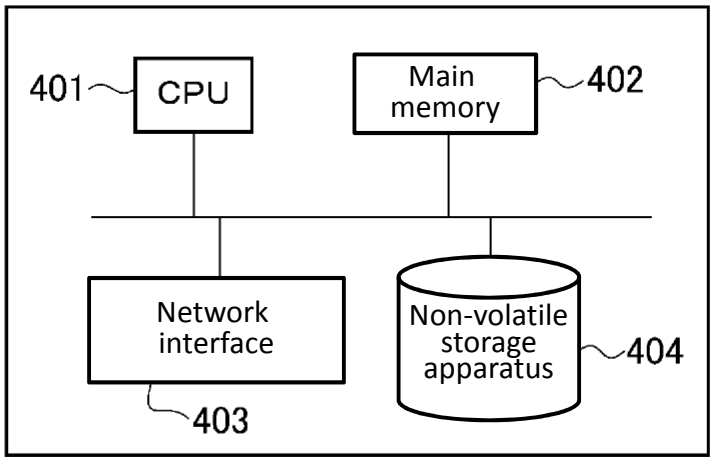

Fig.5

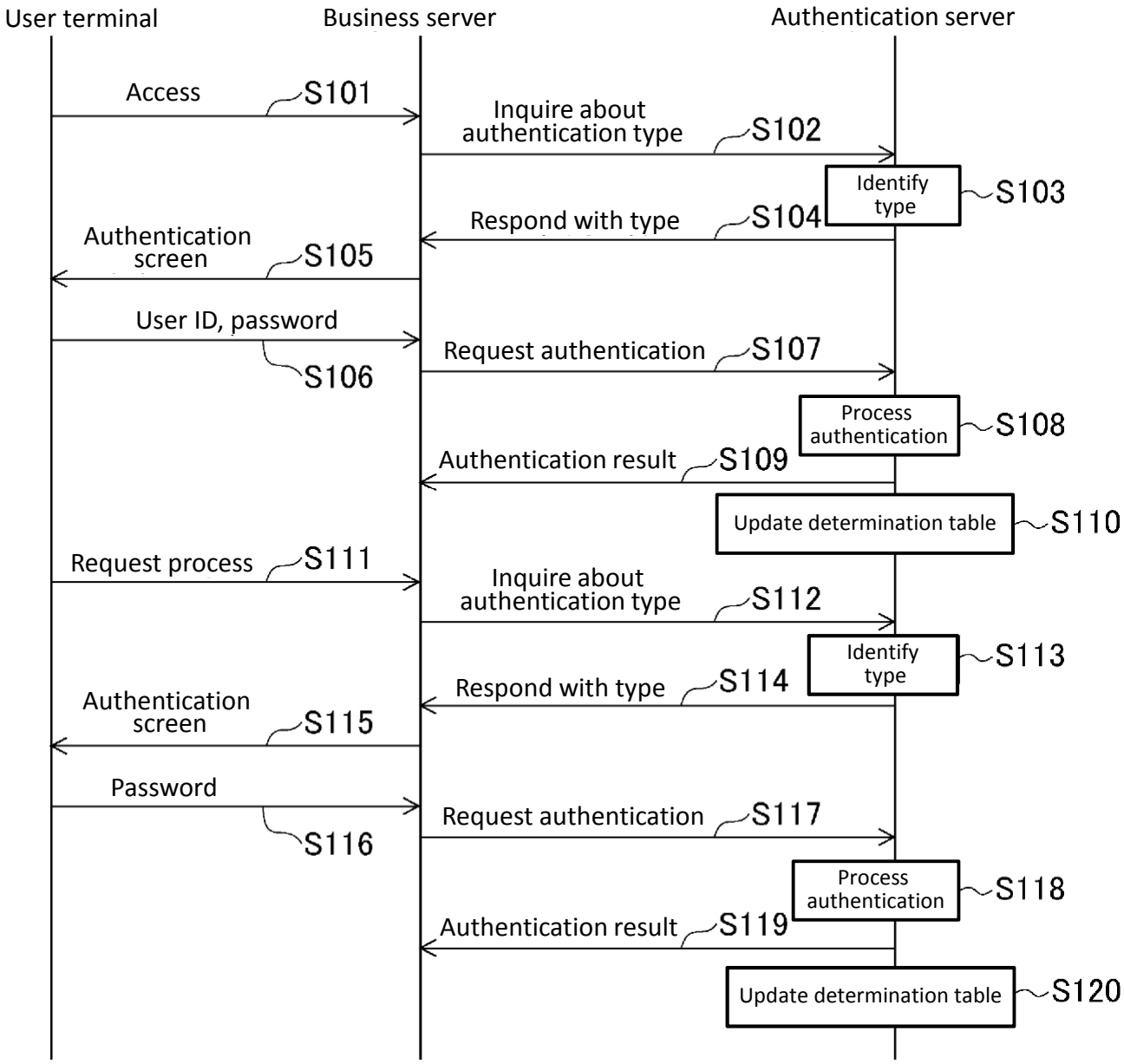
User terminal
Business server
Authentication server
Access
S101
Inquire about authentication type
S102
Identify type
S103
Respond with type
S104
Authentication screen
S105
User ID, password
S106
Request authentication
S107
Process authentication
S108
Authentication result
S109
Update determination table
S110
Request process
S111
Inquire about authentication type
S112
Identify type
S113
Respond with type
S114
Authentication screen
S115
Password
S116
Request authentication
S117
Process authentication
S118
Authentication result
S119
Update determination table
S120

Fig.6

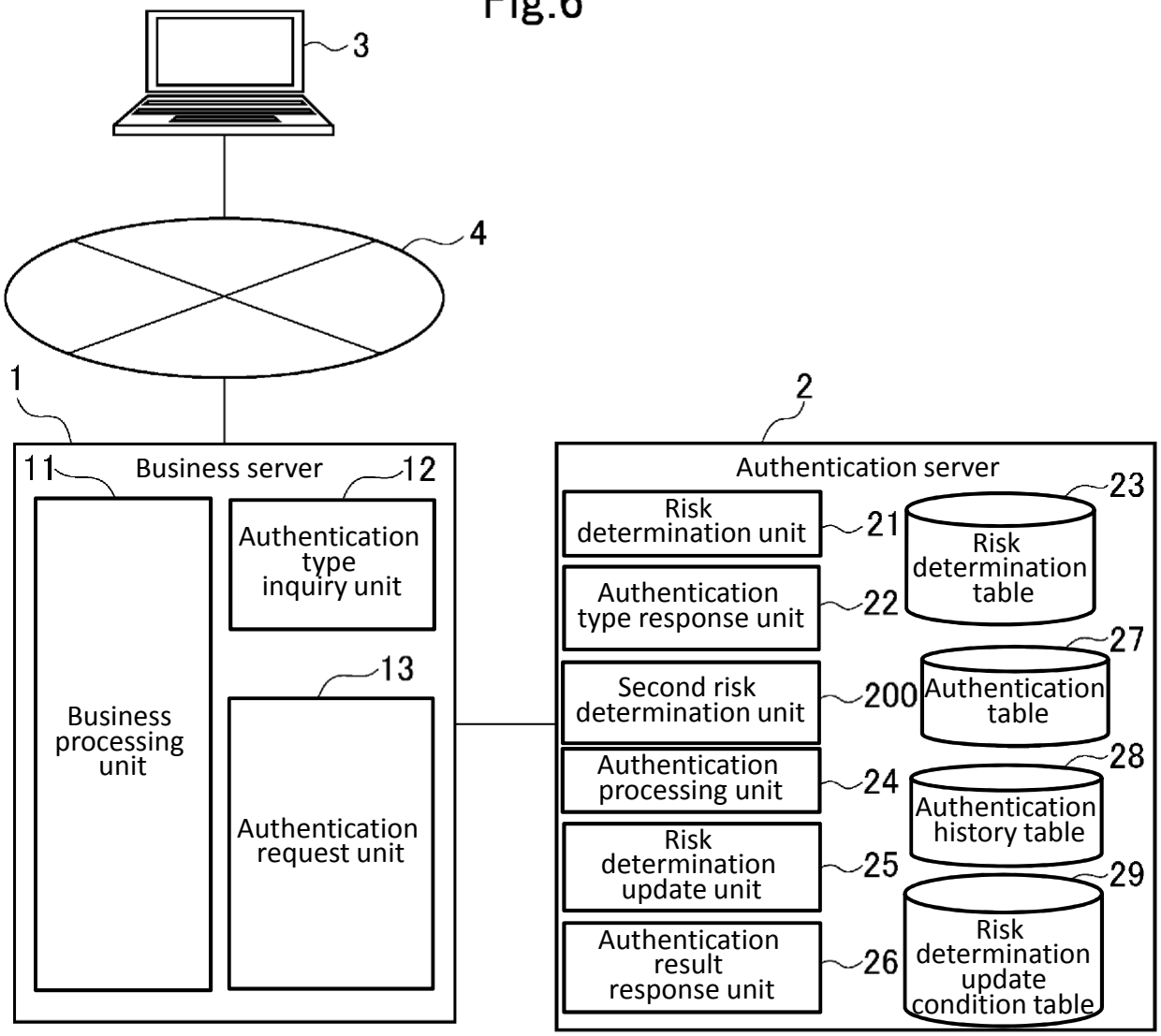
3
4
1
2
11
Business server
12
Authentication type inquiry unit
13
Business processing unit
Authentication request unit
Authentication server
Risk determination unit
21
23
Risk determination table
Authentication type response unit
22
27
Second risk determination unit
200
Authentication table
Authentication processing unit
24
28
Authentication history table
Risk determination update unit
25
29
Authentication result response unit
26
Risk determination update condition table

Fig.7

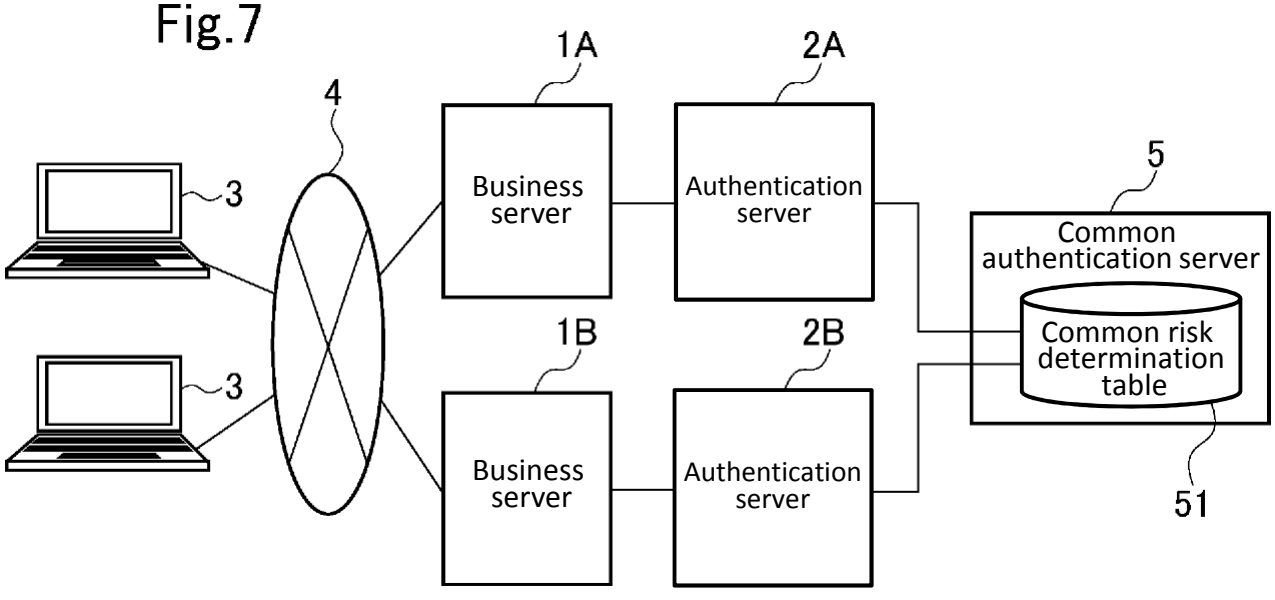
1A
2A
4
5
3
Business server
Authentication server
Common authentication server
Common risk determination table
1B
2B
3
Business server
Authentication server
51

Fig.8

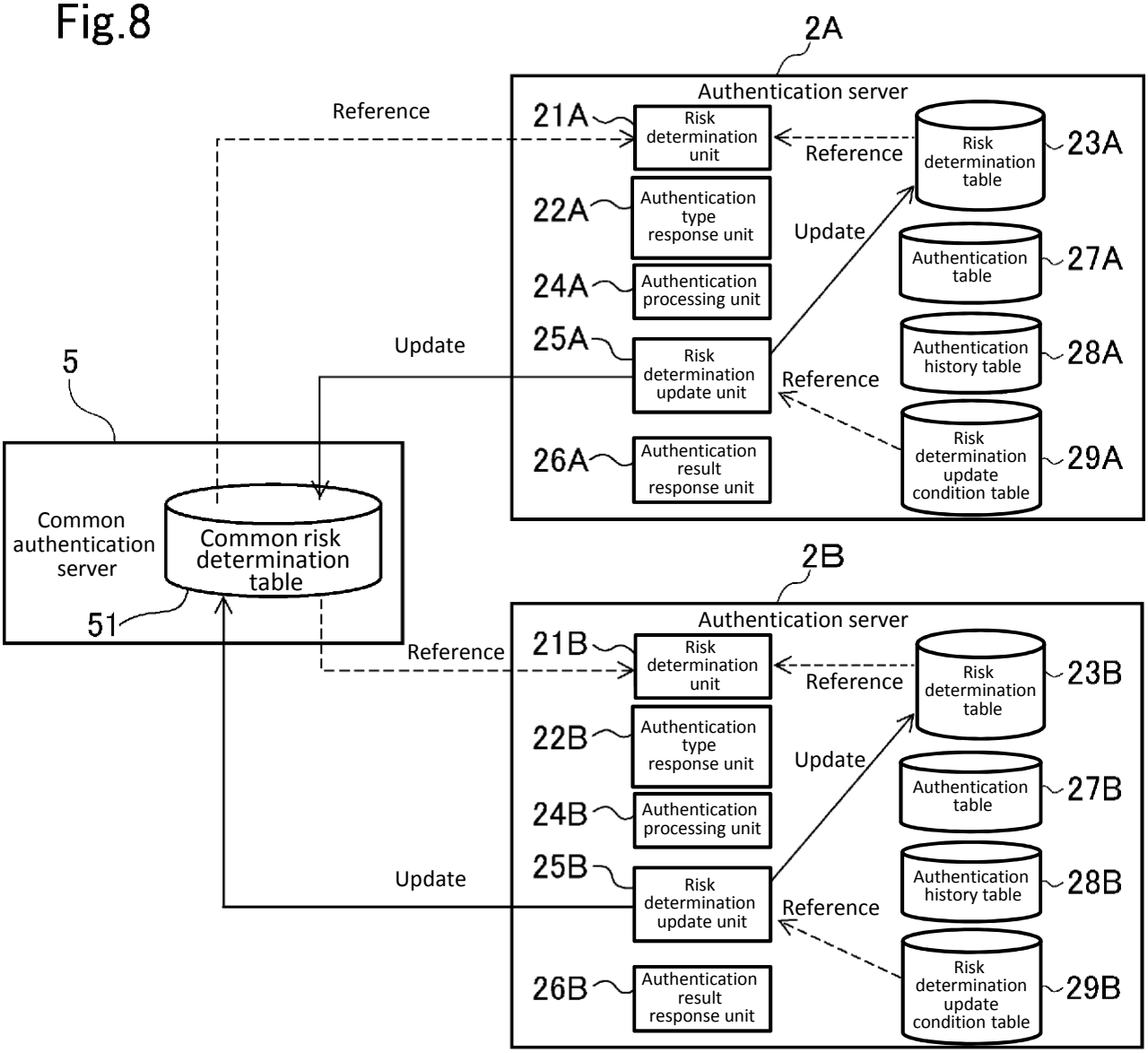

Fig.9

Update condition	Update process
When authentication requests with respect to X1 or more of user IDs are made from same IP address within prescribed time and all authentication requests result in authentication failure	Add IP address to IP address list in risk determination table of own server
⋮	⋮
When authentication requests with respect to X2 or more of user IDs are made from same IP address within prescribed time and all authentication requests result in authentication failure	Add IP address to high-risk IP address list in common risk determination table
⋮	⋮