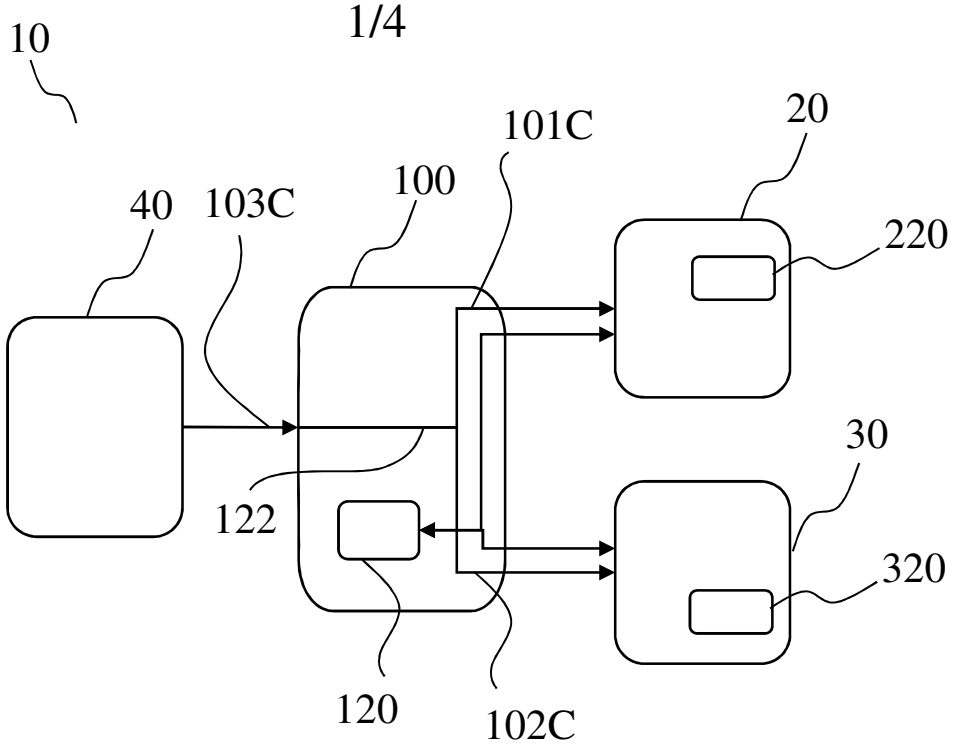
10
101C
20
40
103C
100
220
122
30
320
120
102C

FIG. 1

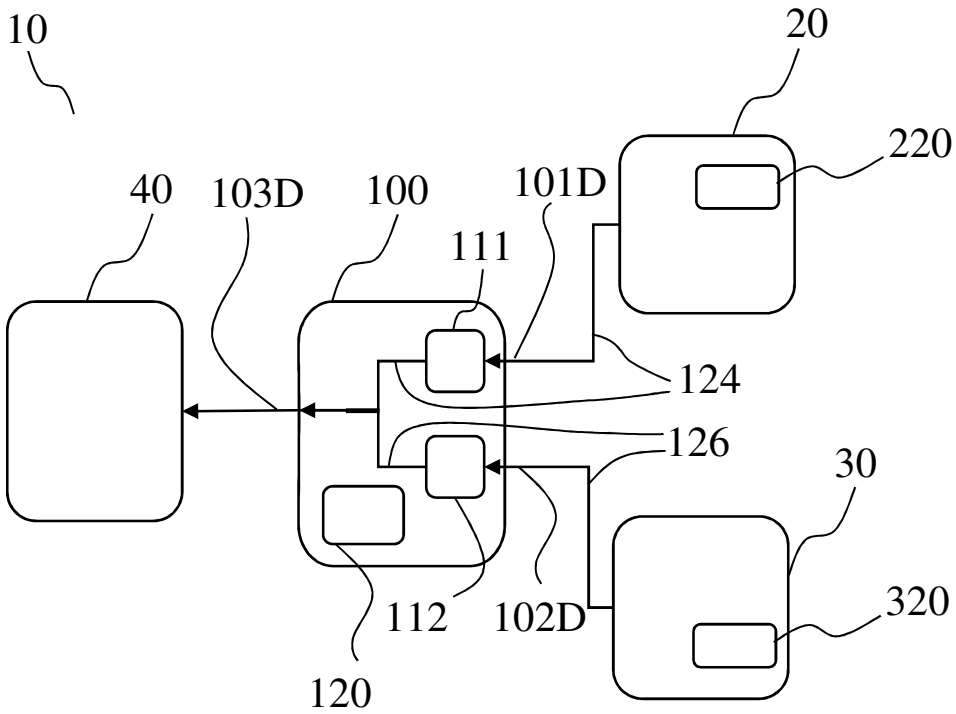
10
20
220
40
103D
100
101D
111
124
126
30
320
112
102D
120

FIG. 2

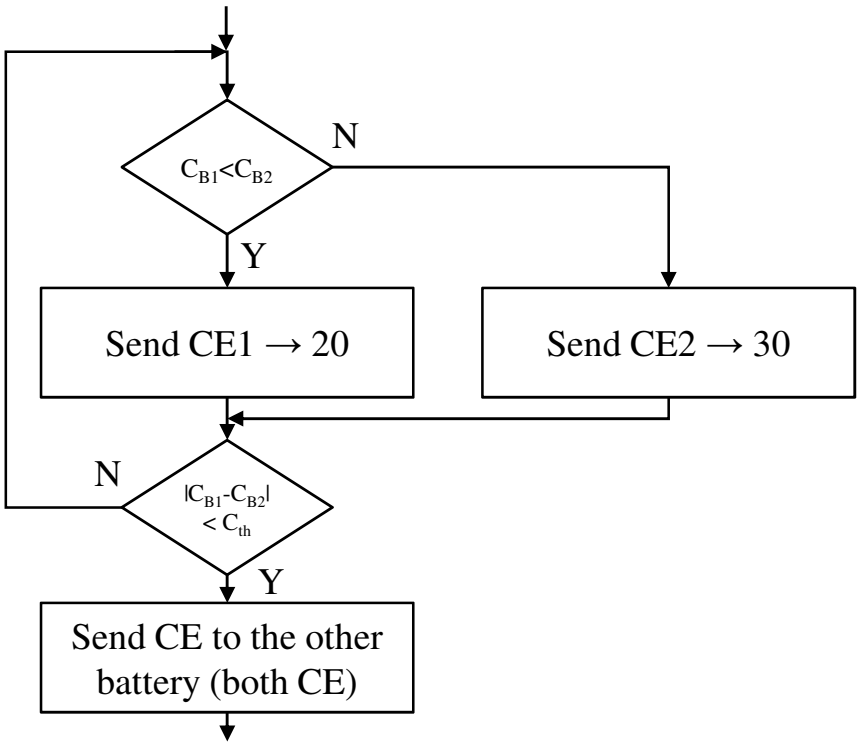
$C_{B1}<C_{B2}$
N
Y
Send CE1 → 20
Send CE2 → 30
$|C_{B1}-C_{B2}| < C_{th}$
N
Y
Send CE to the other battery (both CE)

FIG. 3

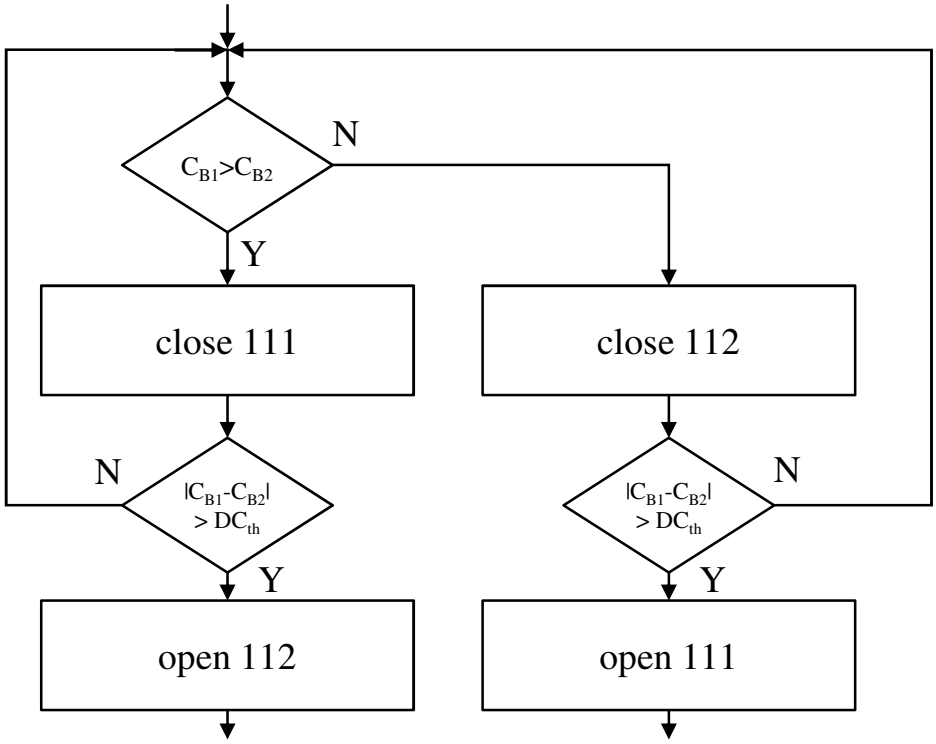
$C_{B1}>C_{B2}$
N
Y
close 111
close 112
$|C_{B1}-C_{B2}| > DC_{th}$
N
Y
$|C_{B1}-C_{B2}| > DC_{th}$
N
Y
open 112
open 111

FIG. 4

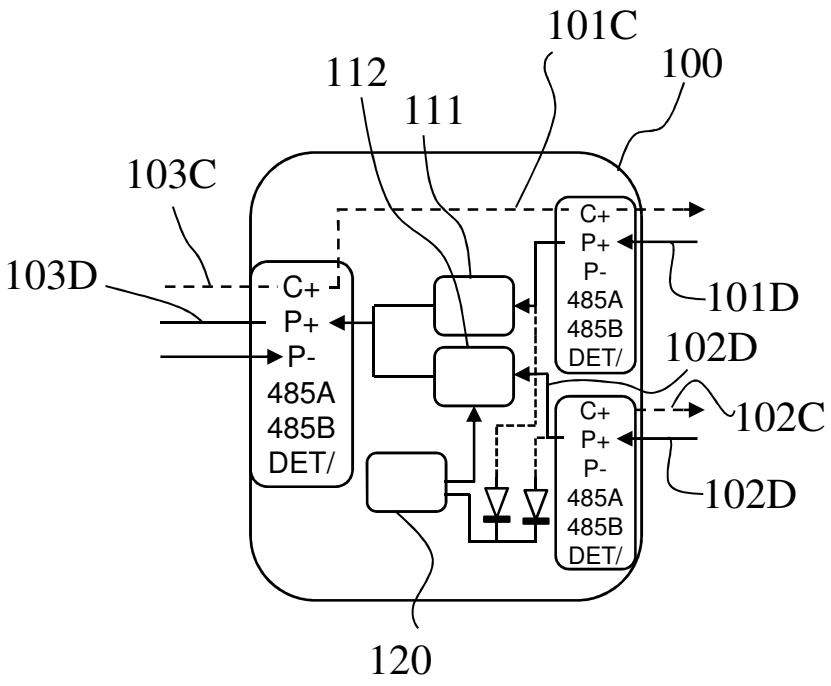
101C
112
100
111
103C
C+
P+
P-
485A
485B
DET/
103D
101D
102D
102C
102D
120

FIG. 5

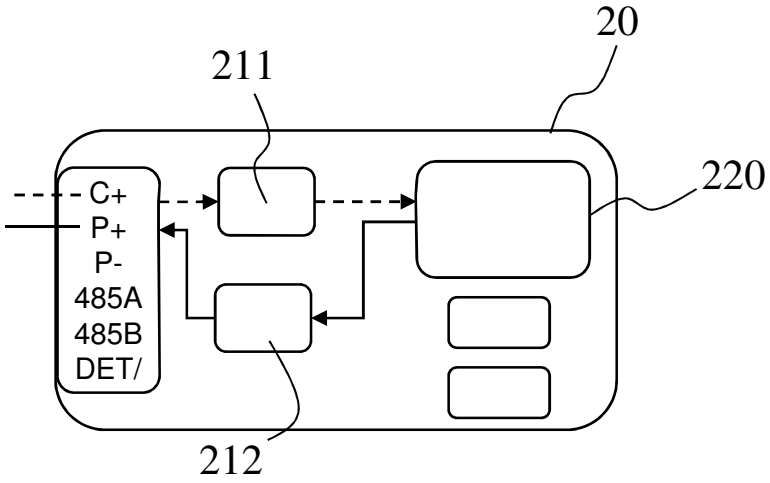
20
211
220
C+
P+
P-
485A
485B
DET/
212

FIG. 6

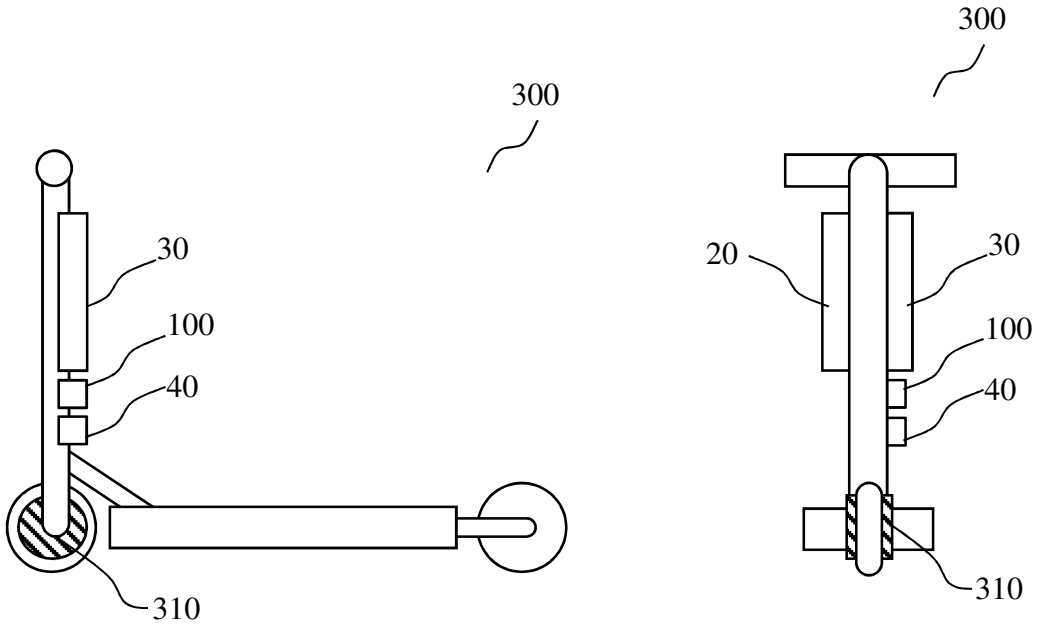

FIG. 7