FIG. 1A

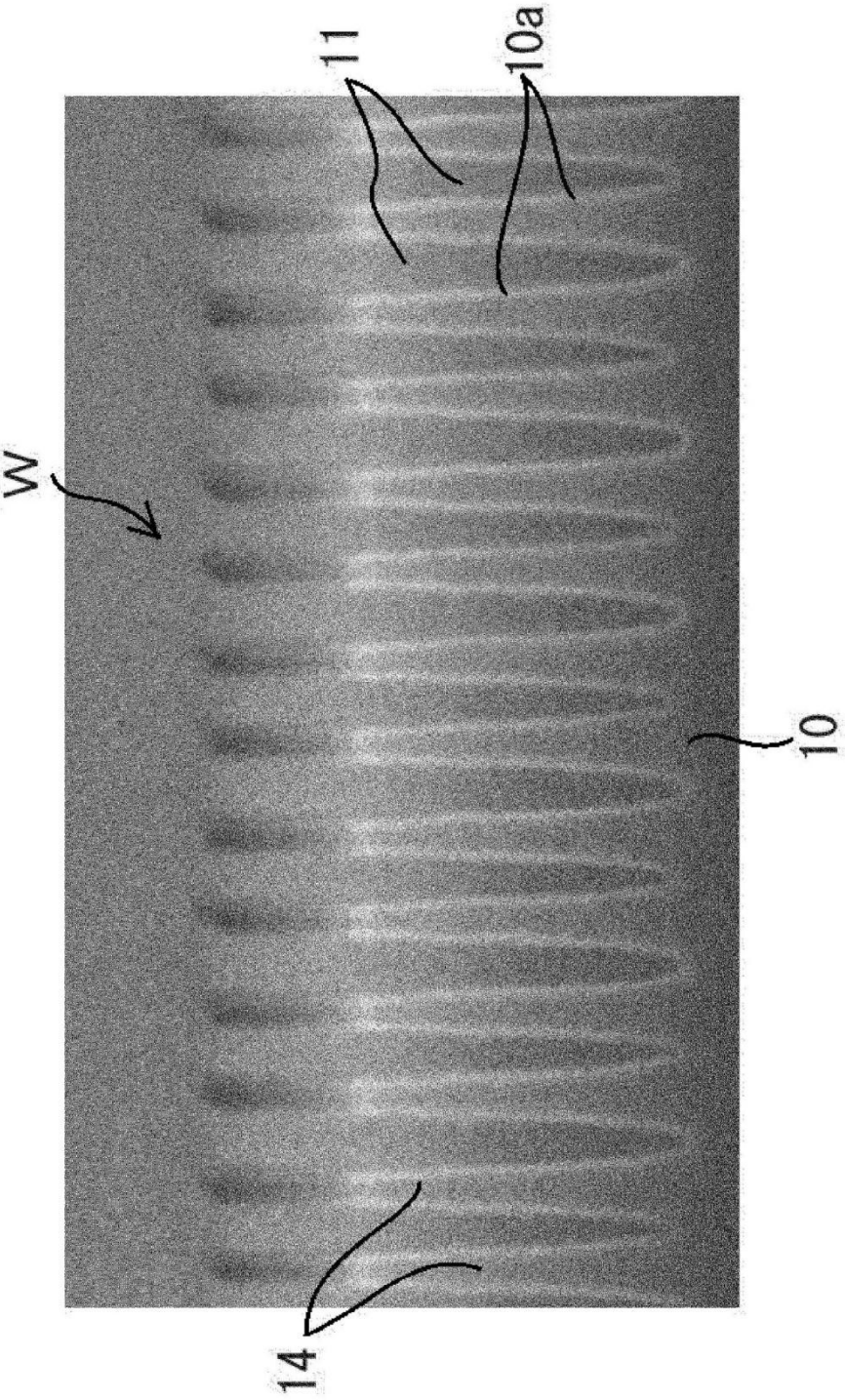

FIG. 1B

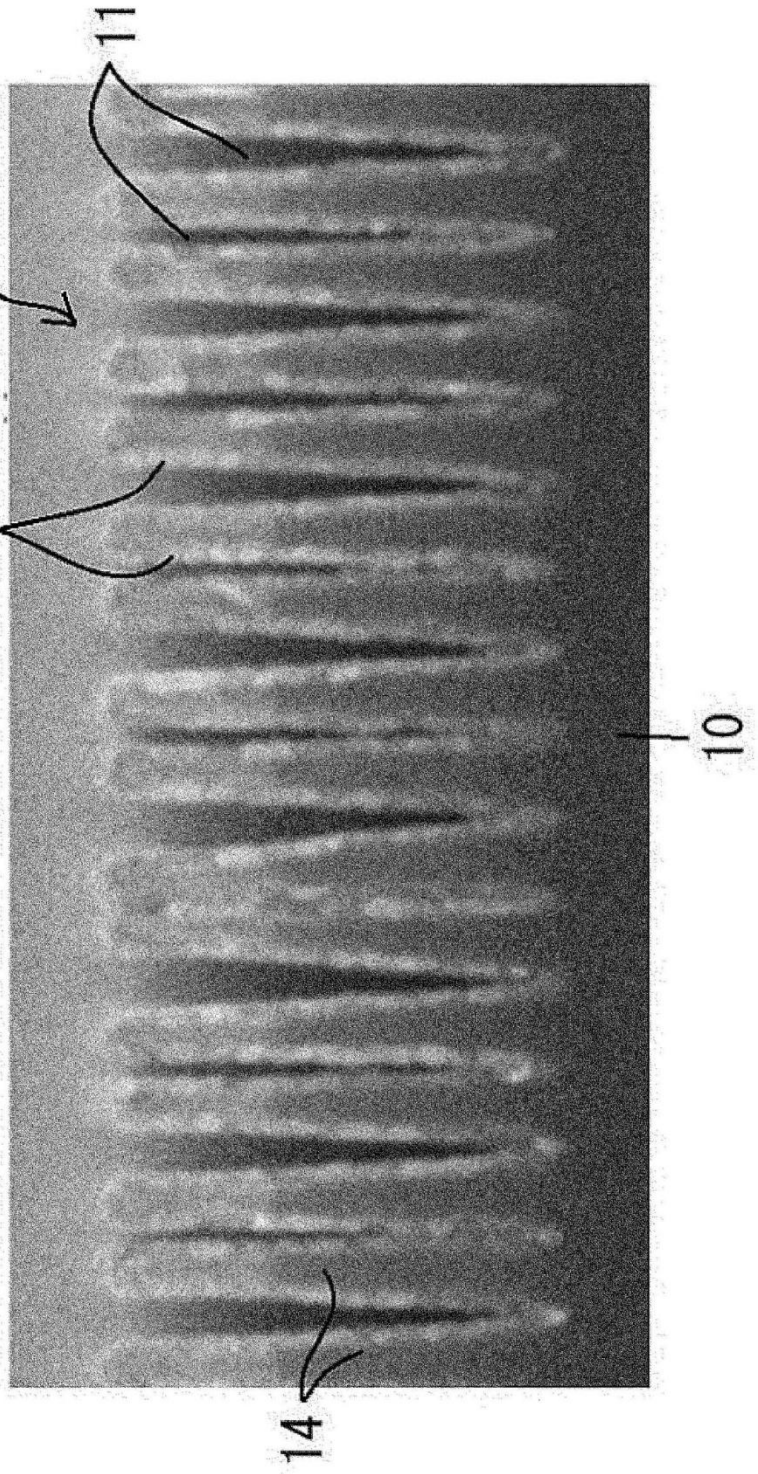

FIG. 2A

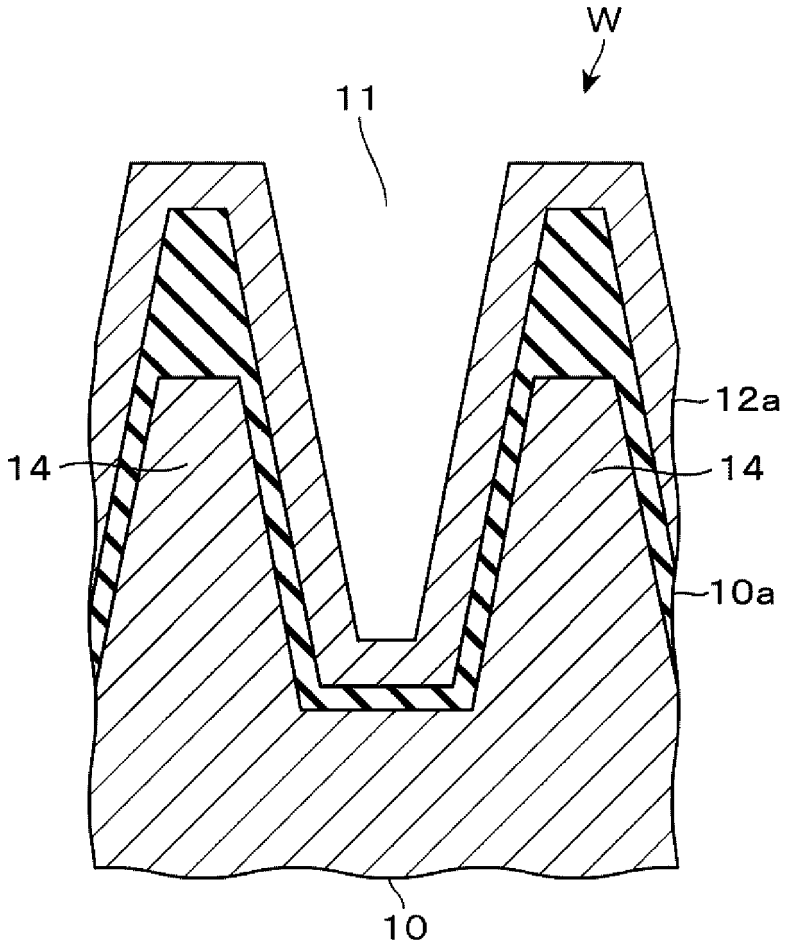

FIG. 2B

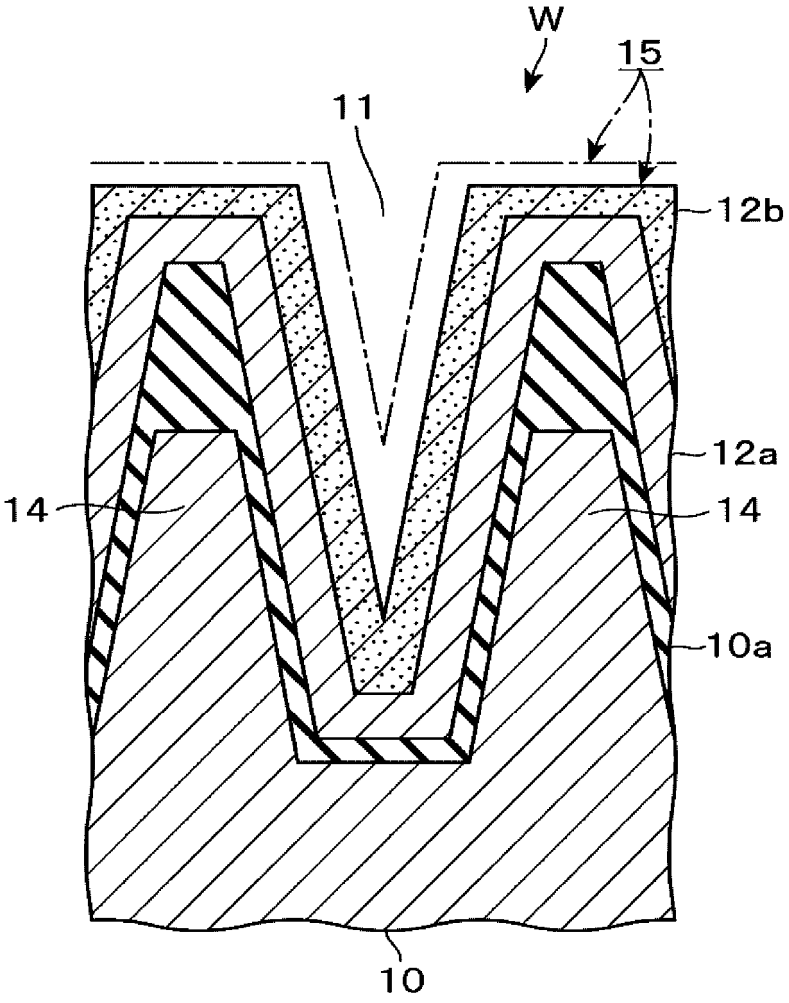

FIG. 2C

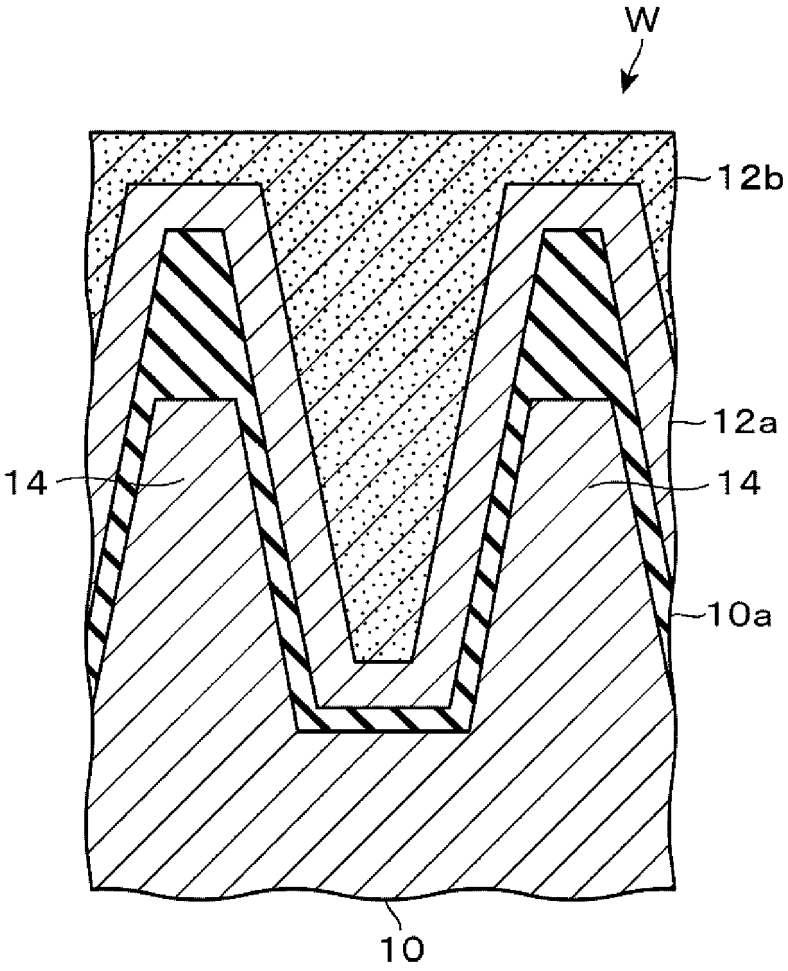

FIG. 2D

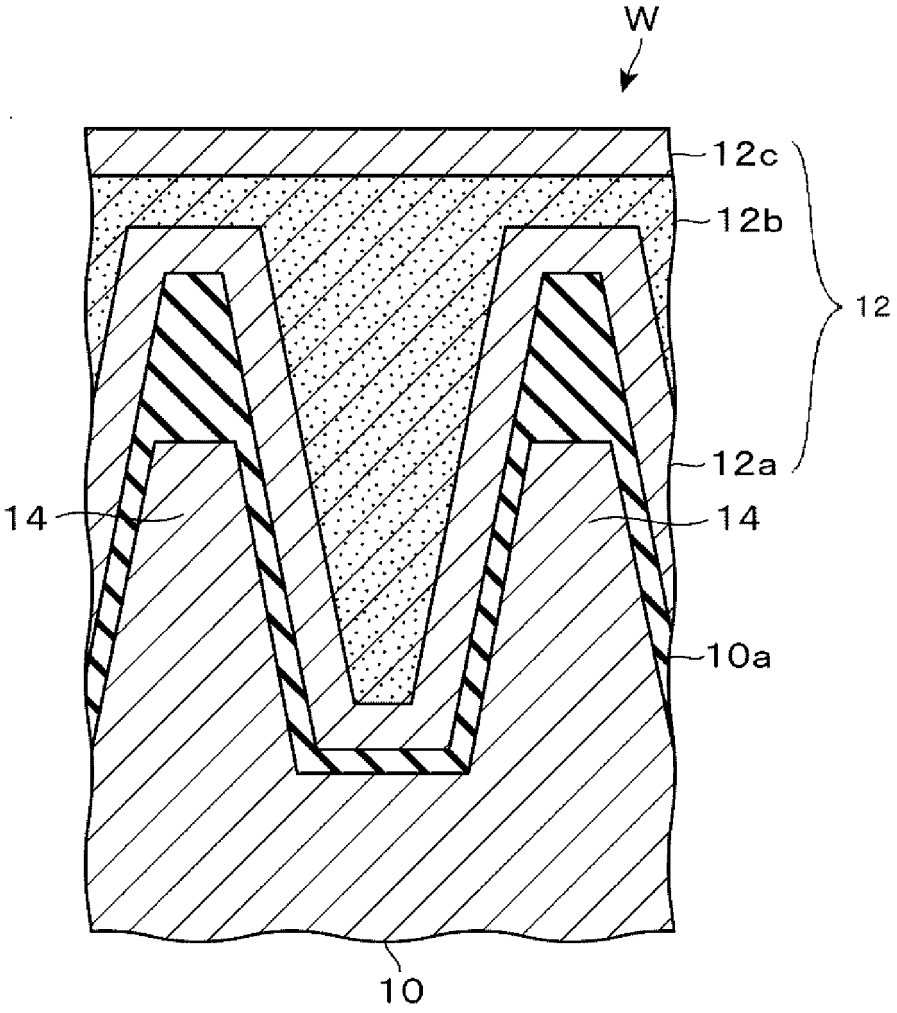

FIG. 2E

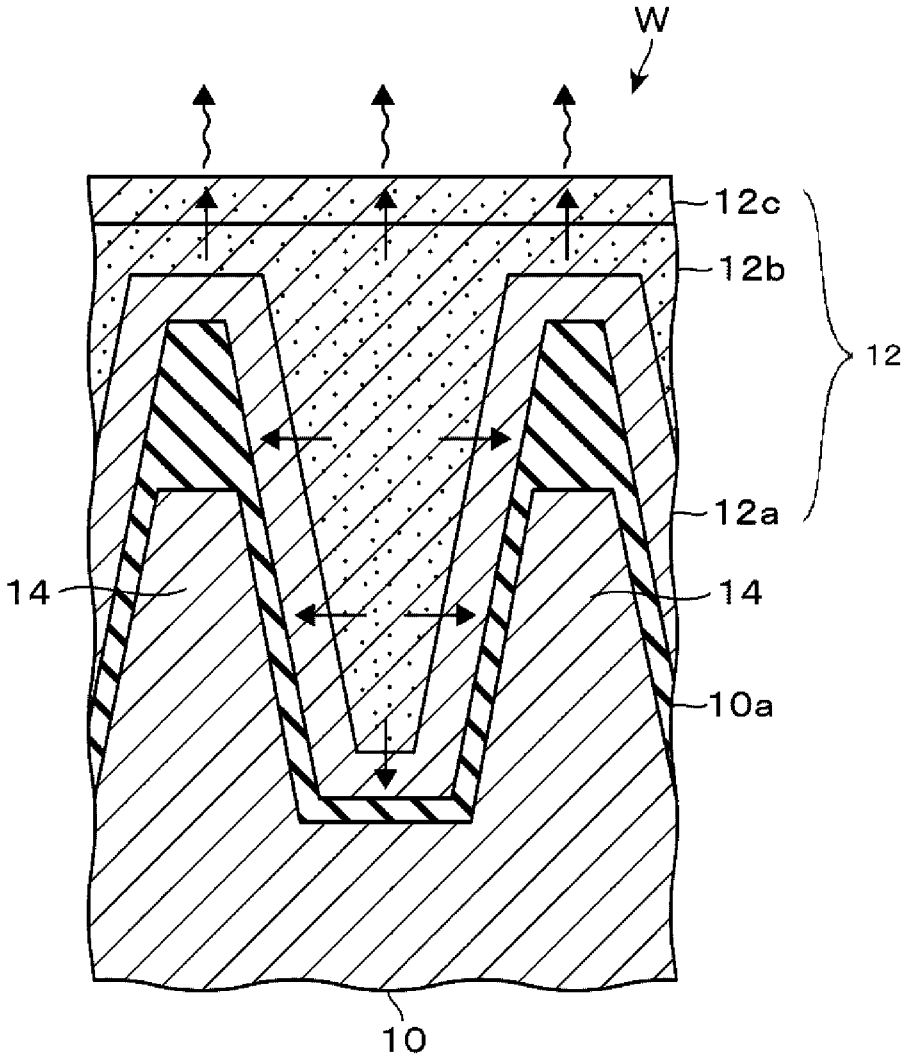

FIG. 2F

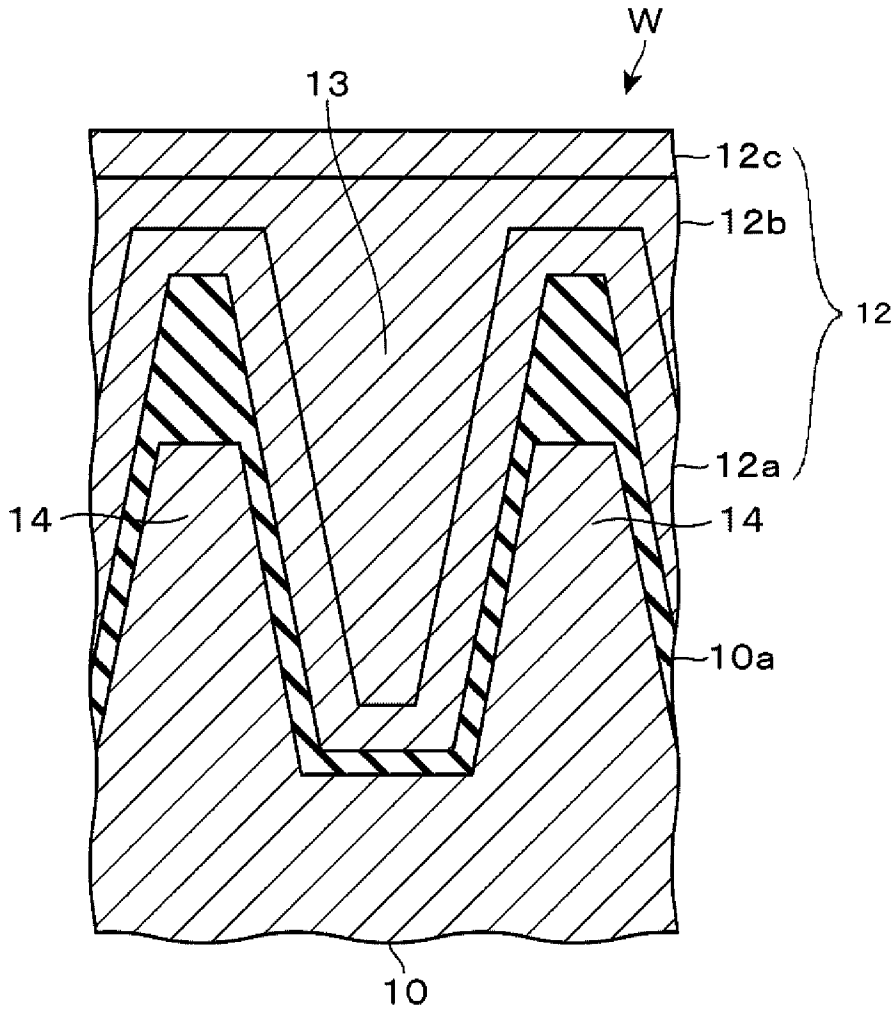

FIG. 3

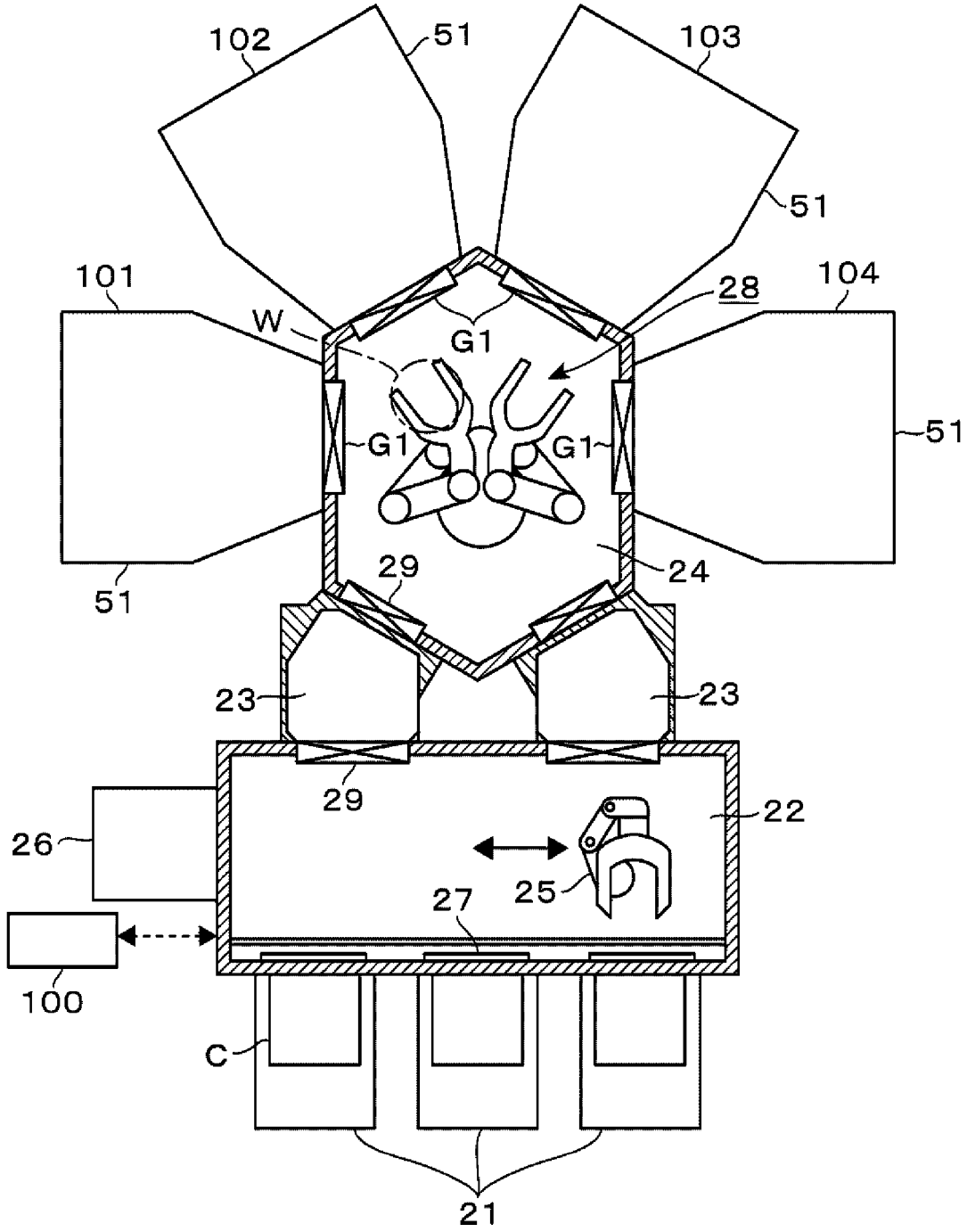
102
51
103
51
101
104
28
W
G1
G1
G1
51
51
29
24
23
23
29
22
26
25
27
100
C
21

FIG. 4

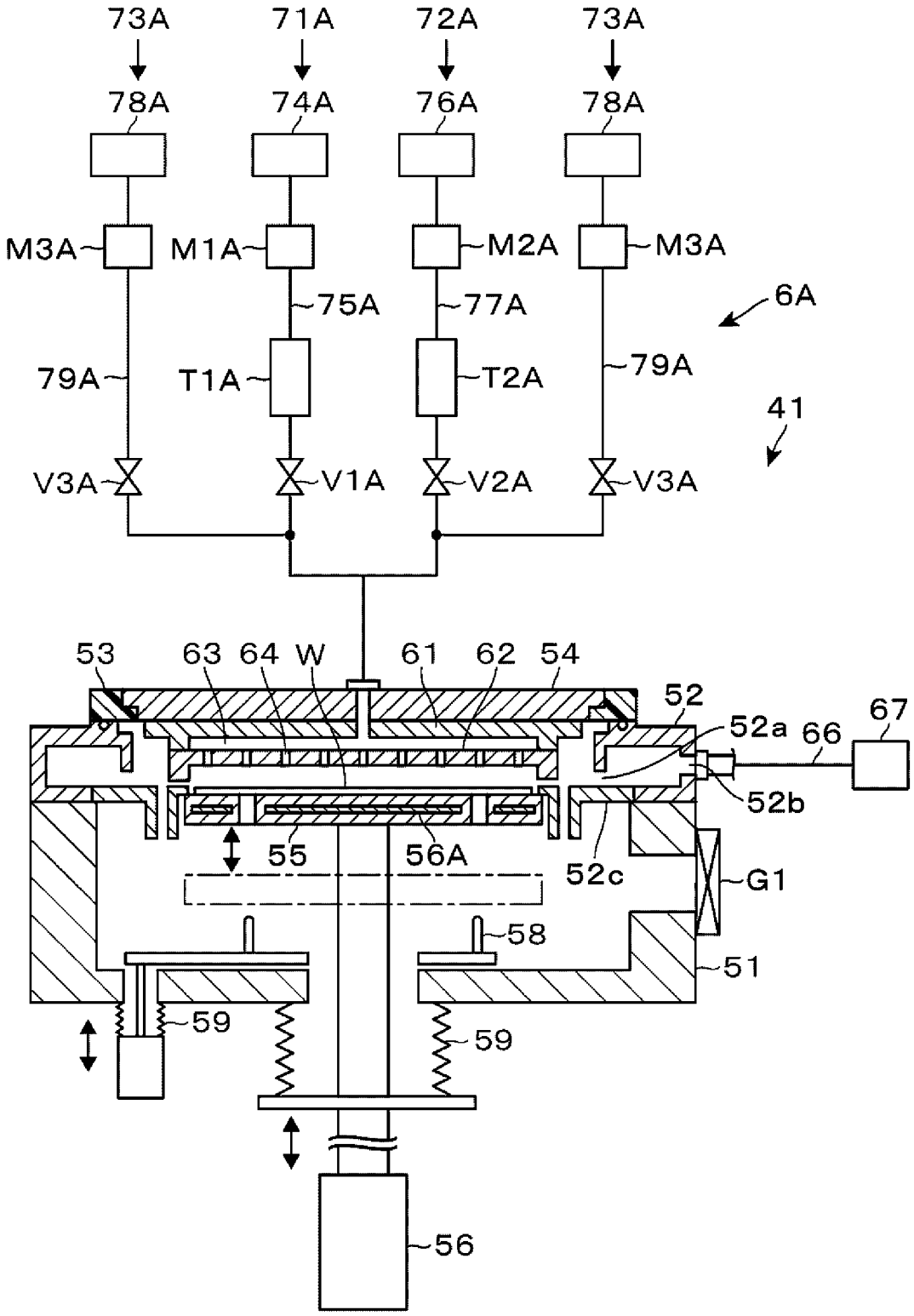
73A
71A
72A
73A
78A
74A
76A
78A
M3A
M1A
M2A
M3A
75A
77A
6A
79A
T1A
T2A
79A
41
V3A
V1A
V2A
V3A
53
63
64
W
61
62
54
52
52a
66
67
52b
55
56A
52c
G1
58
51
59
59
56

FIG. 5A

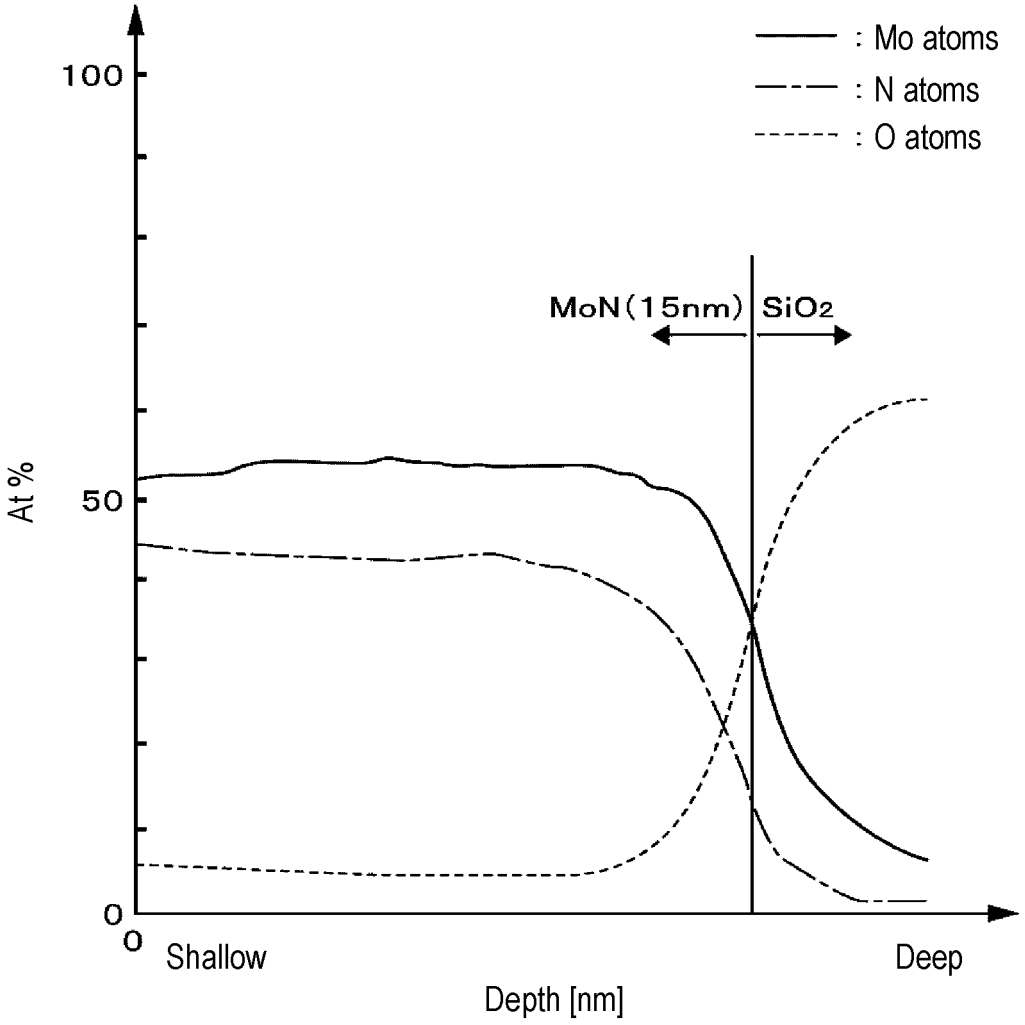
: Mo atoms
: N atoms
: O atoms
100
50
0
0
At %
MoN(15nm)
SiO2
Shallow
Deep
Depth [nm]

FIG. 5B

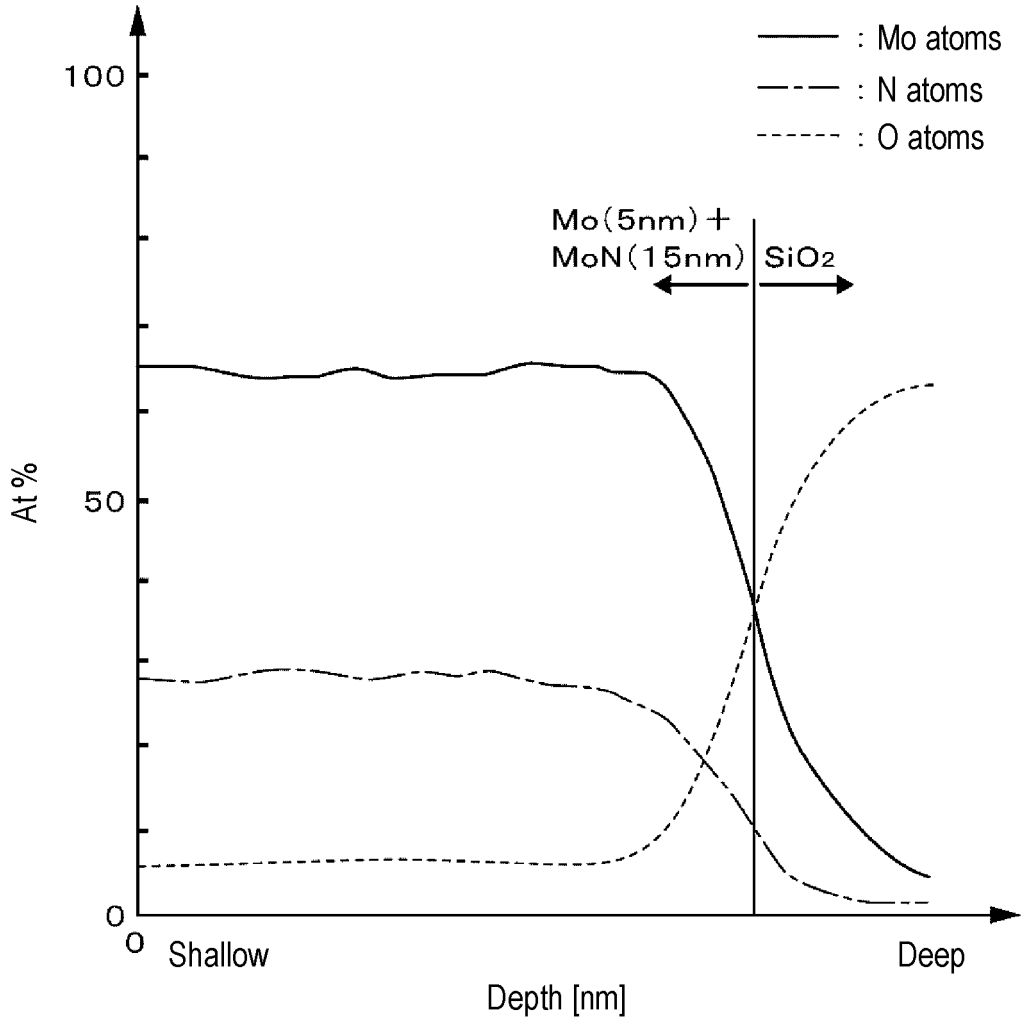
: Mo atoms
: N atoms
: O atoms
Mo(5nm)+
MoN(15nm)
SiO2
100
50
0
At %
0
Shallow
Deep
Depth [nm]

FIG. 5C

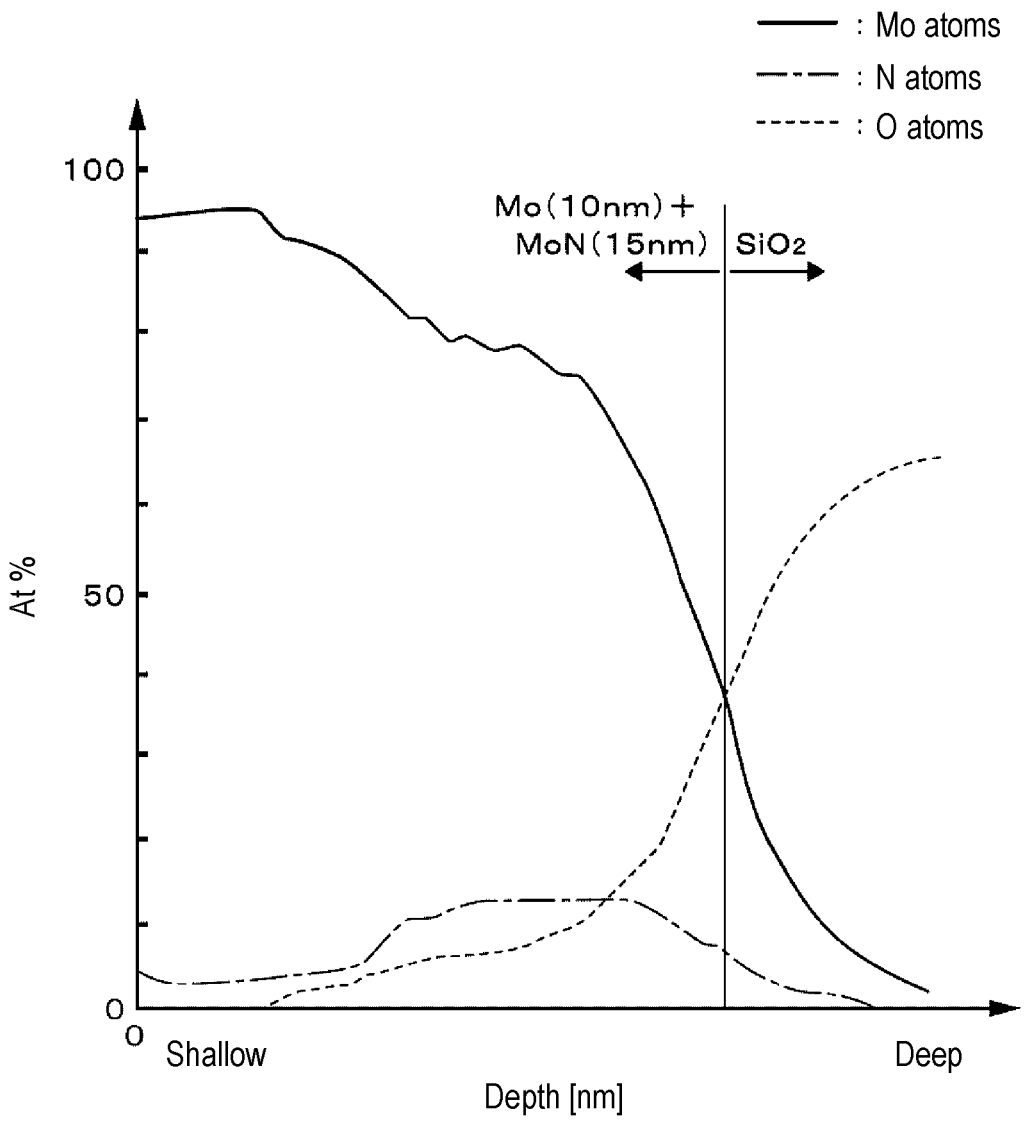
: Mo atoms
: N atoms
: O atoms
100
50
0
At %
Mo(10nm)+
MoN(15nm)
SiO2
0
Shallow
Deep
Depth [nm]

FIG. 5D

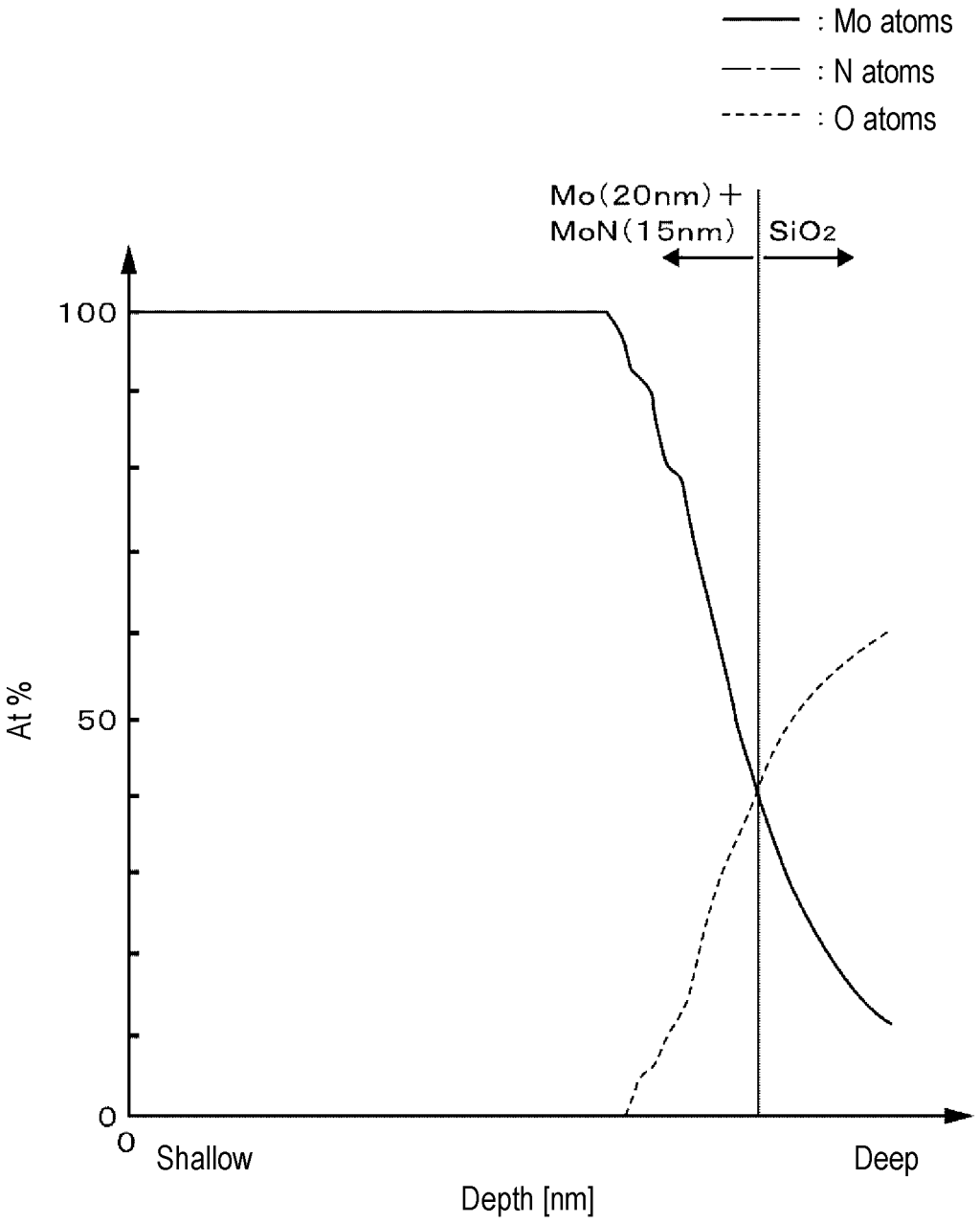
: Mo atoms
: N atoms
: O atoms
Mo(20nm)+
MoN(15nm)
SiO2
100
50
0
At %
0
Shallow
Deep
Depth [nm]

FIG. 6

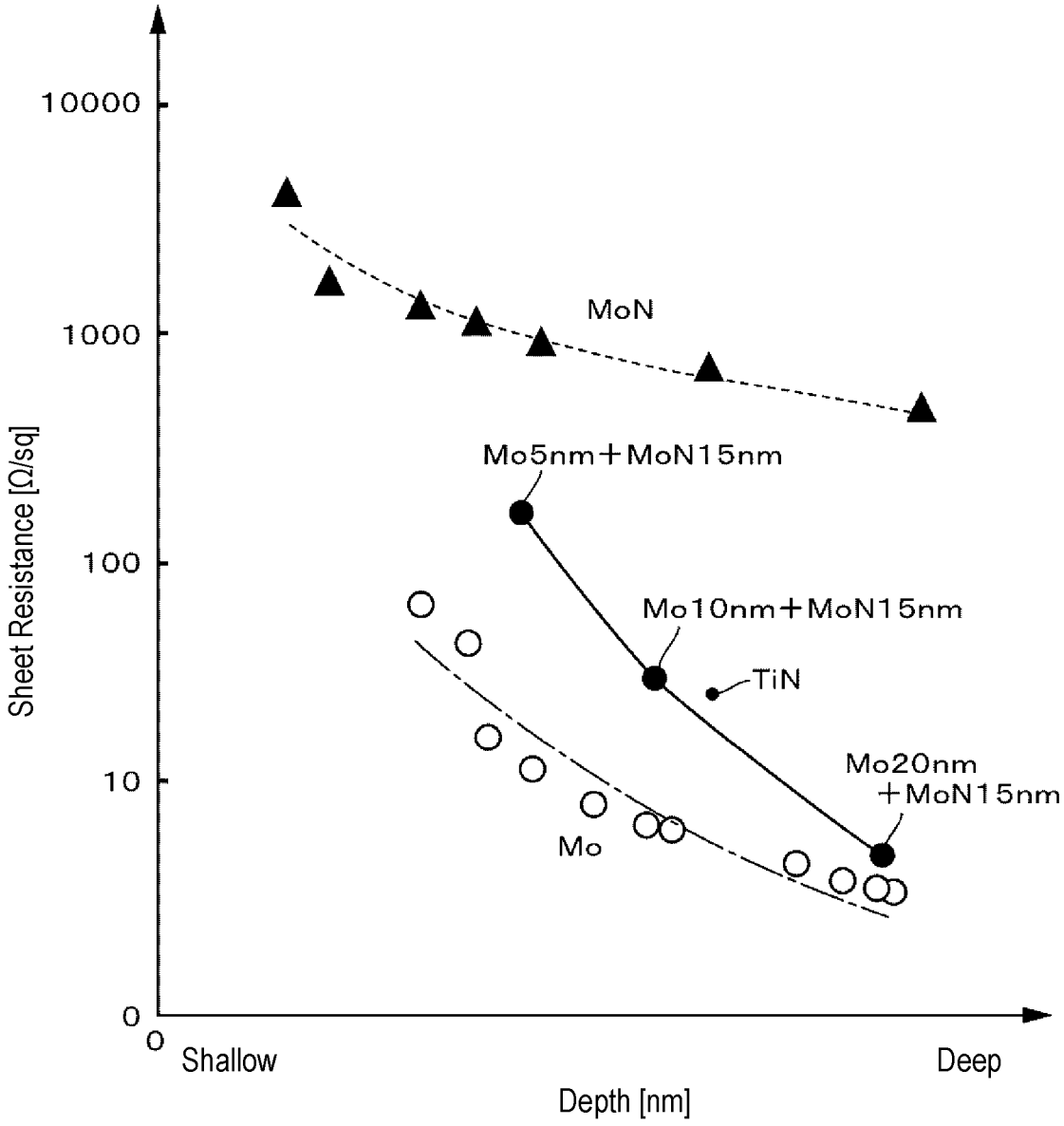
10000
1000
100
10
0
0
Sheet Resistance [Ω/sq]
MoN
Mo5nm+MoN15nm
Mo10nm+MoN15nm
TiN
Mo20nm
+MoN15nm
Mo
Shallow
Deep
Depth [nm]

FIG. 7A

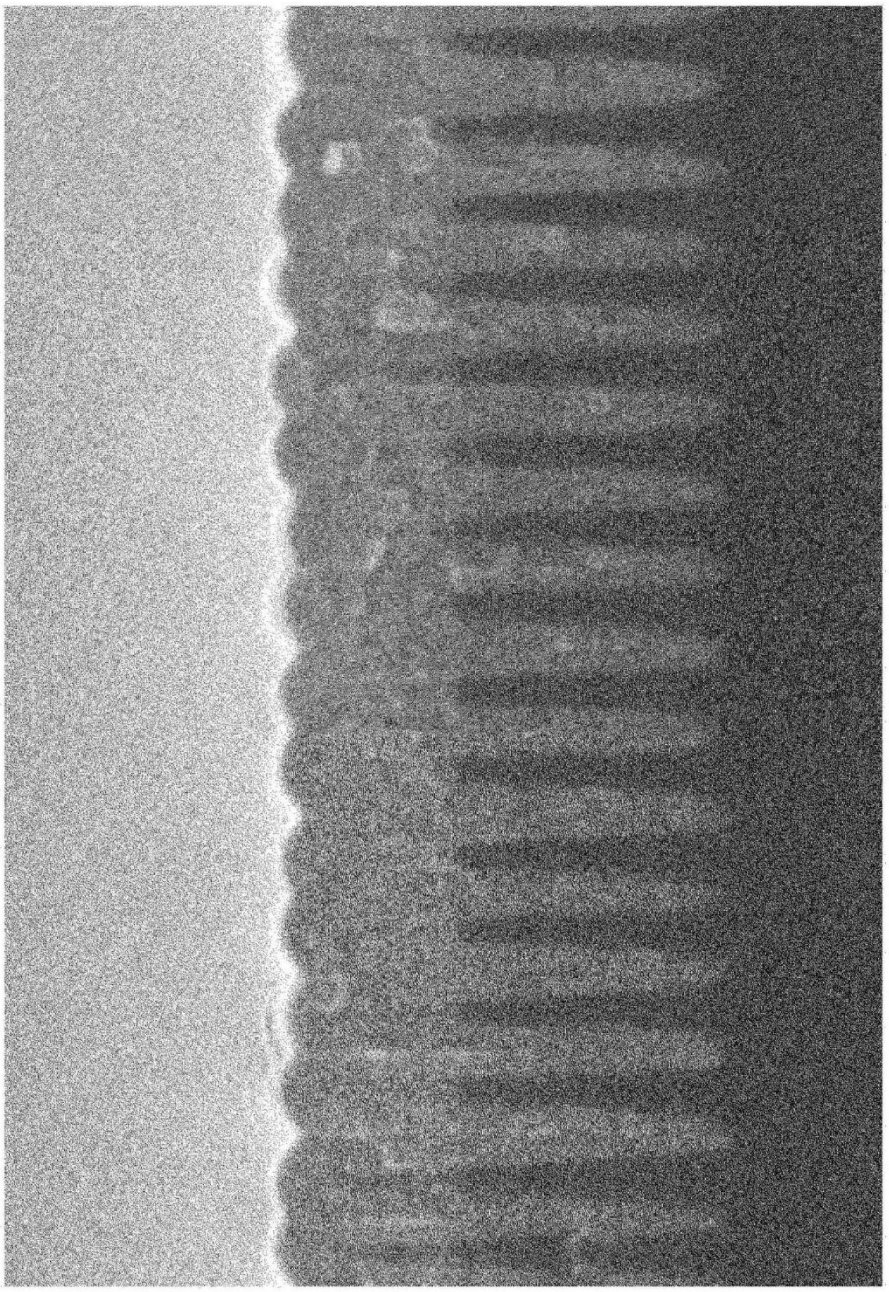

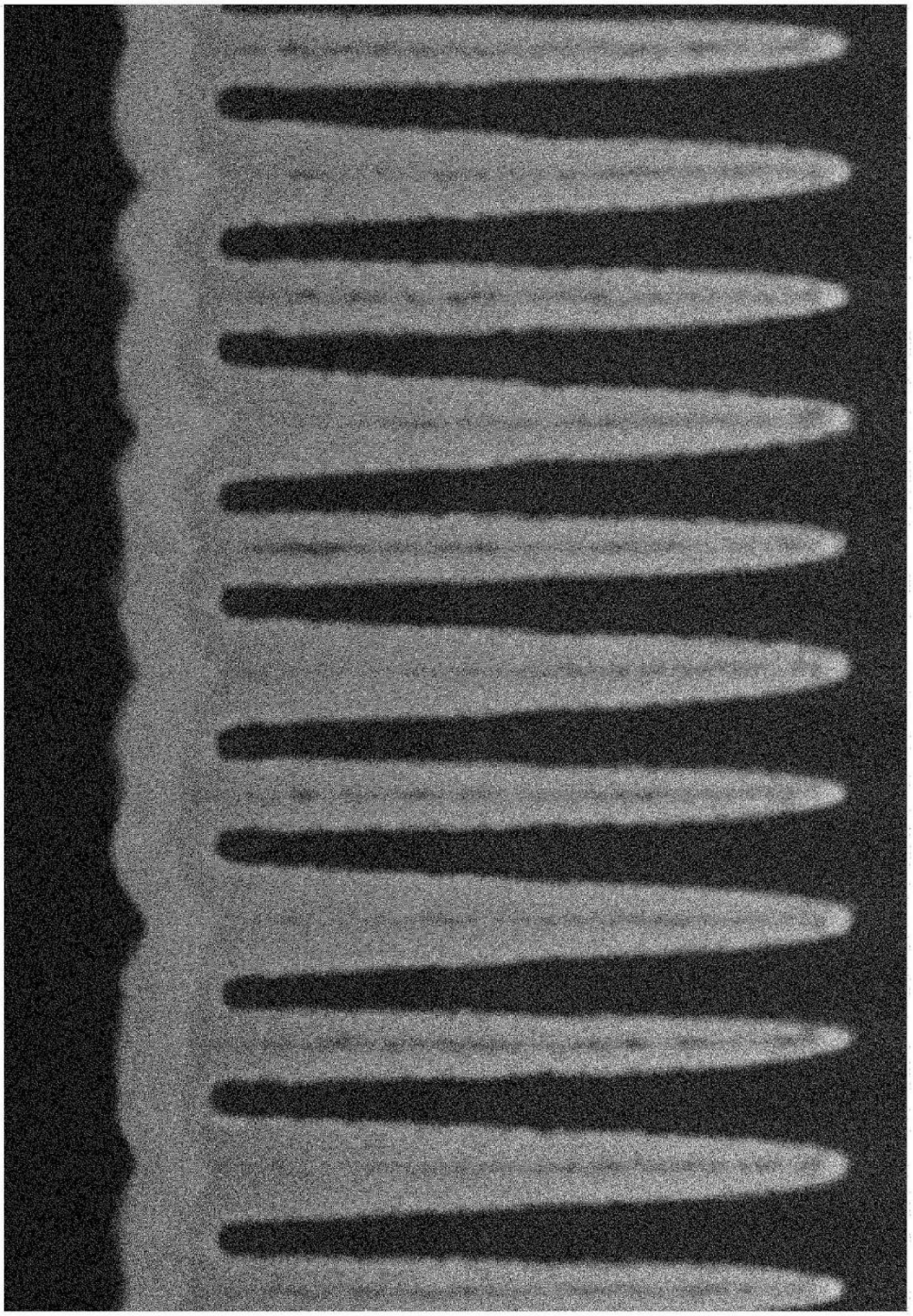

FIG. 7B

FIG. 7C

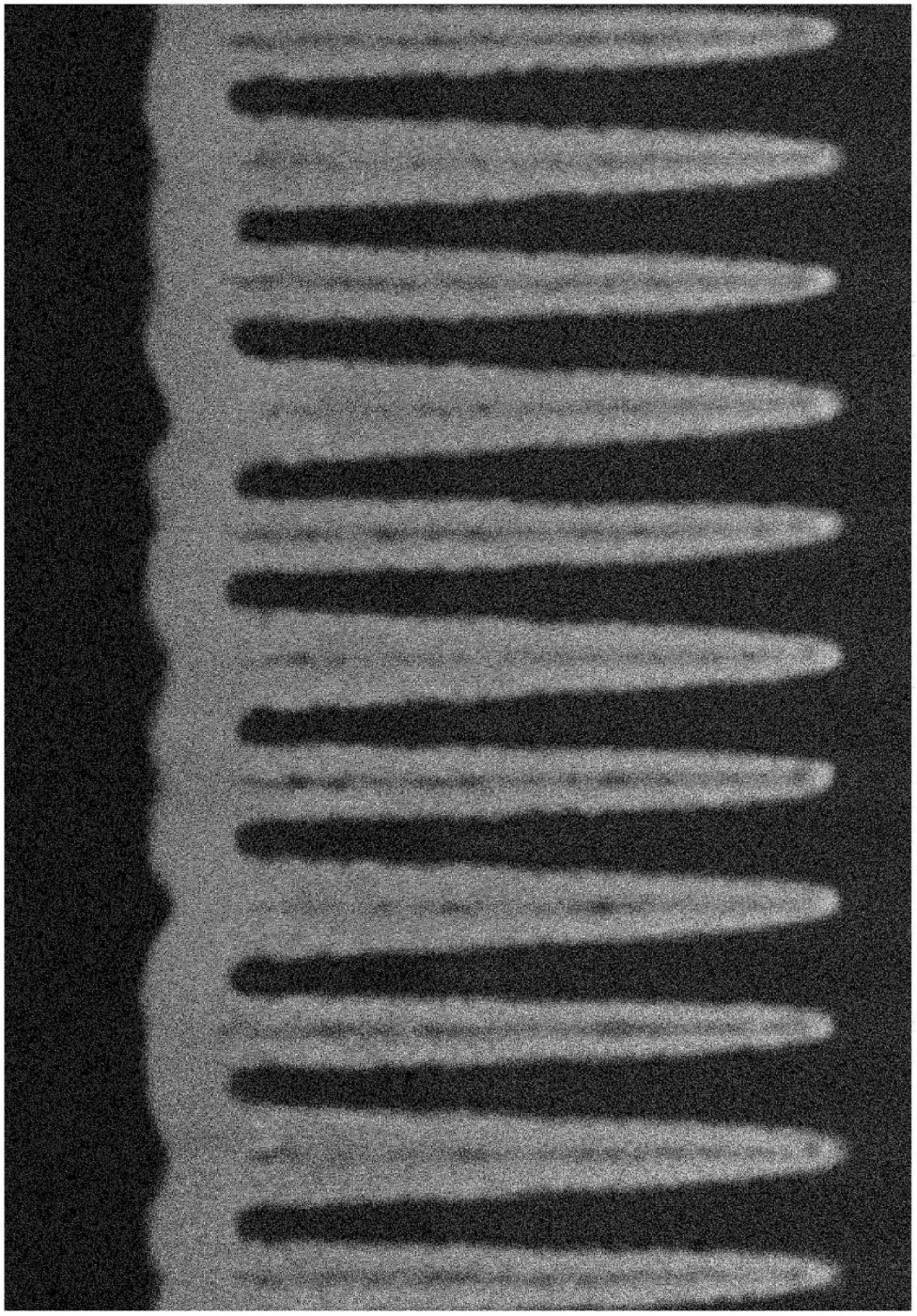

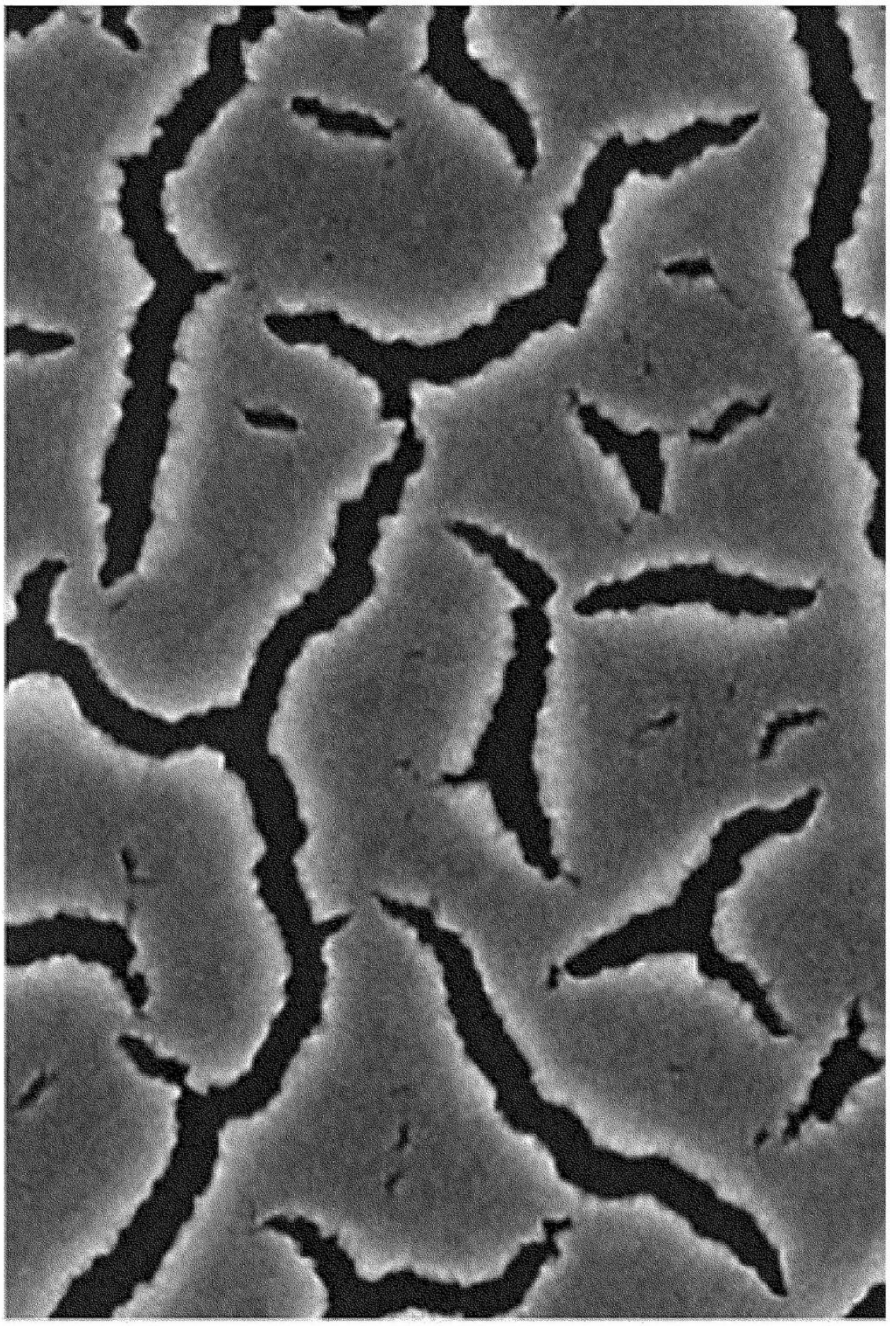

FIG. 8A

FIG. 8B

