(12) INTERNATIONAL APPLICATION PUBLISHED UNDER THE PATENT COOPERATION TREATY (PCT)

(19) World Intellectual Property Organization
International Bureau

(43) International Publication Date
13 April 2006 (13.04.2006)

PCT

(10) International Publication Number
WO 2006/037805 A2

(51) International Patent Classification:
C10G 2/00 (2006.01) *C10G 9/00* (2006.01)

(21) International Application Number:
PCT/EP2005/055078

(22) International Filing Date: 6 October 2005 (06.10.2005)

(25) Filing Language: English

(26) Publication Language: English

(30) Priority Data:
04104947.9 8 October 2004 (08.10.2004) EP

(71) Applicant *(for all designated States except US)*: **SHELL INTERNATIONALE RESEARCH MAATSCHAPPIJ B.V.** [NL/NL]; Carel van Bylandtlaan 30, NL-2596 HR The Hague (NL).

(72) Inventors; and

(75) Inventors/Applicants *(for US only)*: **CRUIJSBERG, Emil, Eduard, Antonius** [NL/NL]; Badhuisweg 3, NL-1031 CM Amsterdam (NL). **DIERICKX, Jan, Lodewijk, Maria** [BE/NL]; Badhuisweg 3, NL-1031 CM Amsterdam (NL). **HOEK, Arend** [NL/NL]; Badhuisweg 3, NL-1031 CM Amsterdam (NL). **VAN SCHIJNDEL, Johannes, Marie, Gemma** [NL/NL]; Badhuisweg 3, NL-1031 CM Amsterdam (NL). **VAN WESTRENEN, Jeroen** [NL/NL]; Badhuisweg 3, NL-1031 CM Amsterdam (NL).

(81) Designated States *(unless otherwise indicated, for every kind of national protection available)*: AE, AG, AL, AM, AT, AU, AZ, BA, BB, BG, BR, BW, BY, BZ, CA, CH, CN, CO, CR, CU, CZ, DE, DK, DM, DZ, EC, EE, EG, ES, FI, GB, GD, GE, GH, GM, HR, HU, ID, IL, IN, IS, JP, KE, KG, KM, KP, KR, KZ, LC, LK, LR, LS, LT, LU, LV, LY, MA, MD, MG, MK, MN, MW, MX, MZ, NA, NG, NI, NO, NZ, OM, PG, PH, PL, PT, RO, RU, SC, SD, SE, SG, SK, SL, SM, SY, TJ, TM, TN, TR, TT, TZ, UA, UG, US, UZ, VC, VN, YU, ZA, ZM, ZW.

(84) Designated States *(unless otherwise indicated, for every kind of regional protection available)*: ARIPO (BW, GH, GM, KE, LS, MW, MZ, NA, SD, SL, SZ, TZ, UG, ZM, ZW), Eurasian (AM, AZ, BY, KG, KZ, MD, RU, TJ, TM), European (AT, BE, BG, CH, CY, CZ, DE, DK, EE, ES, FI, FR, GB, GR, HU, IE, IS, IT, LT, LU, LV, MC, NL, PL, PT, RO, SE, SI, SK, TR), OAPI (BF, BJ, CF, CG, CI, CM, GA, GN, GQ, GW, ML, MR, NE, SN, TD, TG).

Published:
— *without international search report and to be republished upon receipt of that report*

For two-letter codes and other abbreviations, refer to the "Guidance Notes on Codes and Abbreviations" appearing at the beginning of each regular issue of the PCT Gazette.

(54) **Title:** PROCESS TO PREPARE LOWER OLEFINS FROM A CARBON CONTAINING FEEDSTOCK

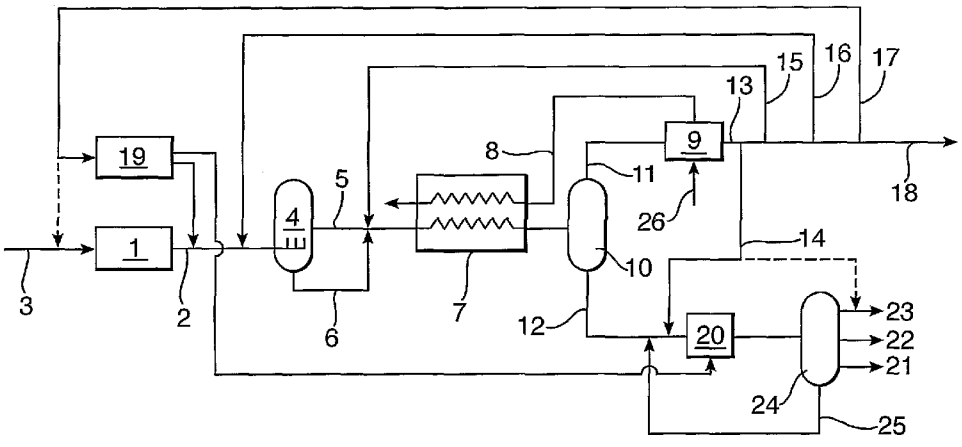

(57) **Abstract:** Process to make ethylene and/or propylene from a carbonaceous feedstock by performing the following steps, (aa) preparing a mixture of carbon monoxide and hydrogen from said feedstock, (bb) performing a Fischer-Tropsch synthesis step using the gaseous mixture obtained in step (aa) to obtain a Fischer-Tropsch product, in admixture with the unconverted carbon monoxide and hydrogen, (cc) performing a thermal cracking step on the Fischer- Tropsch product in admixture with the unconverted carbon monoxide and hydrogen of step (bb).

WO 2006/037805 A2