(12) INTERNATIONAL APPLICATION PUBLISHED UNDER THE PATENT COOPERATION TREATY (PCT)

(19) World Intellectual Property Organization
International Bureau

(43) International Publication Date
29 May 2008 (29.05.2008)

PCT

(10) International Publication Number
WO 2008/061343 A1

(51) International Patent Classification:
G01M 3/28 (2006.01) *F16L 55/00* (2006.01)

(21) International Application Number:
PCT/CA2007/002058

(22) International Filing Date:
16 November 2007 (16.11.2007)

(25) Filing Language: English

(26) Publication Language: English

(30) Priority Data:
60/866,855 21 November 2006 (21.11.2006) US

(71) Applicant *(for all designated States except US)*: **CAR-BER INVESTMENTS INC.** [CA/CA]; 911 Michigan Avenue, Point Edward, ON N7V 1H2 (CA).

(72) Inventor; and

(75) Inventor/Applicant *(for US only)*: **CARSON, Glenn** [CA/CA]; 1510 Venetian Boulevard, Unit M33, Point Edward, ON N7T 7X8 (CA).

(74) Agent: **CHARI, Santosh K.**; Blake, Cassels & Graydon LLP, 199 Bay Street, Suite 2800, Box 25, Commerce Court West, Toronto, ON M5L 1A9 (CA).

(81) Designated States *(unless otherwise indicated, for every kind of national protection available)*: AE, AG, AL, AM, AT, AU, AZ, BA, BB, BG, BH, BR, BW, BY, BZ, CA, CH, CN, CO, CR, CU, CZ, DE, DK, DM, DO, DZ, EC, EE, EG, ES, FI, GB, GD, GE, GH, GM, GT, HN, HR, HU, ID, IL, IN, IS, JP, KE, KG, KM, KN, KP, KR, KZ, LA, LC, LK, LR, LS, LT, LU, LY, MA, MD, ME, MG, MK, MN, MW, MX, MY, MZ, NA, NG, NI, NO, NZ, OM, PG, PH, PL, PT, RO, RS, RU, SC, SD, SE, SG, SK, SL, SM, SV, SY, TJ, TM, TN, TR, TT, TZ, UA, UG, US, UZ, VC, VN, ZA, ZM, ZW.

(84) Designated States *(unless otherwise indicated, for every kind of regional protection available)*: ARIPO (BW, GH, GM, KE, LS, MW, MZ, NA, SD, SL, SZ, TZ, UG, ZM, ZW), Eurasian (AM, AZ, BY, KG, KZ, MD, RU, TJ, TM), European (AT, BE, BG, CH, CY, CZ, DE, DK, EE, ES, FI, FR, GB, GR, HU, IE, IS, IT, LT, LU, LV, MC, MT, NL, PL, PT, RO, SE, SI, SK, TR), OAPI (BF, BJ, CF, CG, CI, CM, GA, GN, GQ, GW, ML, MR, NE, SN, TD, TG).

Declarations under Rule 4.17:

— *as to the identity of the inventor (Rule 4.17(i))*

— *as to applicant's entitlement to apply for and be granted a patent (Rule 4.17(ii))*

Published:

— *with international search report*

[Continued on next page]

(54) **Title:** EXTERNAL PIPE TESTING TOOL AND TESTING METHOD USING SAME

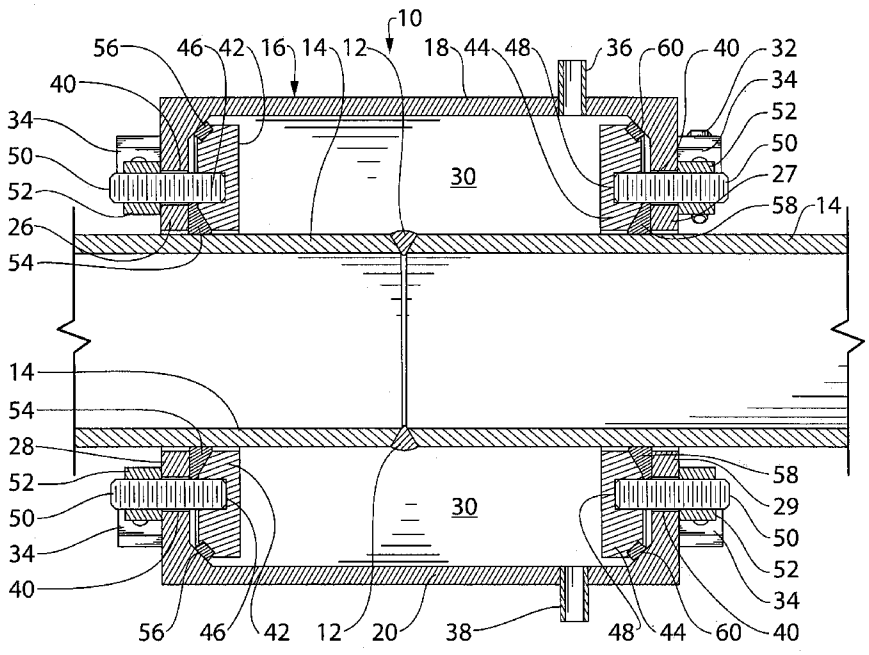

(57) **Abstract:** An apparatus for testing the integrity of pipe welds includes a sleeve for circumferentially surrounding the pipe, the sleeve having an inner diameter greater than the outer diameter of the pipe. The sleeve having end walls extending radially inwards towards the pipe wall. The apparatus including at least two seals to form a sealed annular space between the pipe, the sleeve and the sleeve end walls. A filling and pressurizing means pressurizes the annular space. The test procedure comprises monitoring of the pressure within the space.

WO 2008/061343 A1

— *before the expiration of the time limit for amending the claims and to be republished in the event of receipt of amendments*