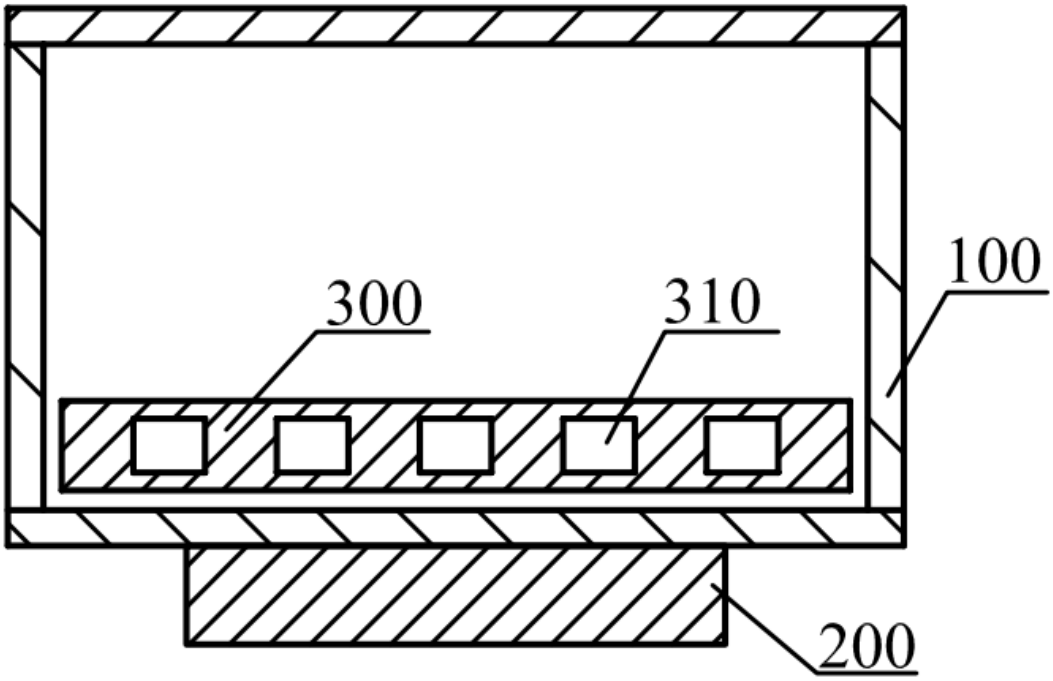

FIG. 1

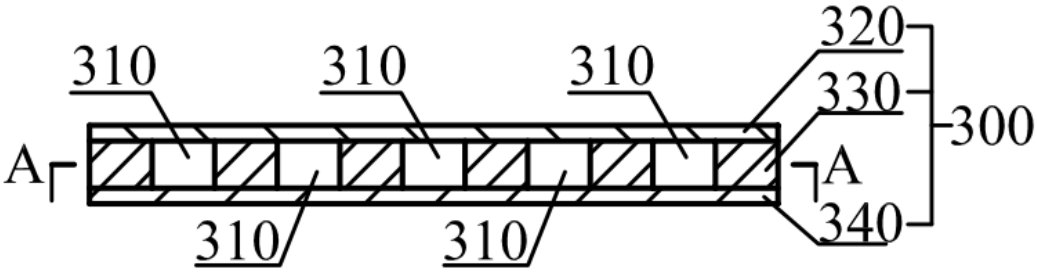

FIG. 2

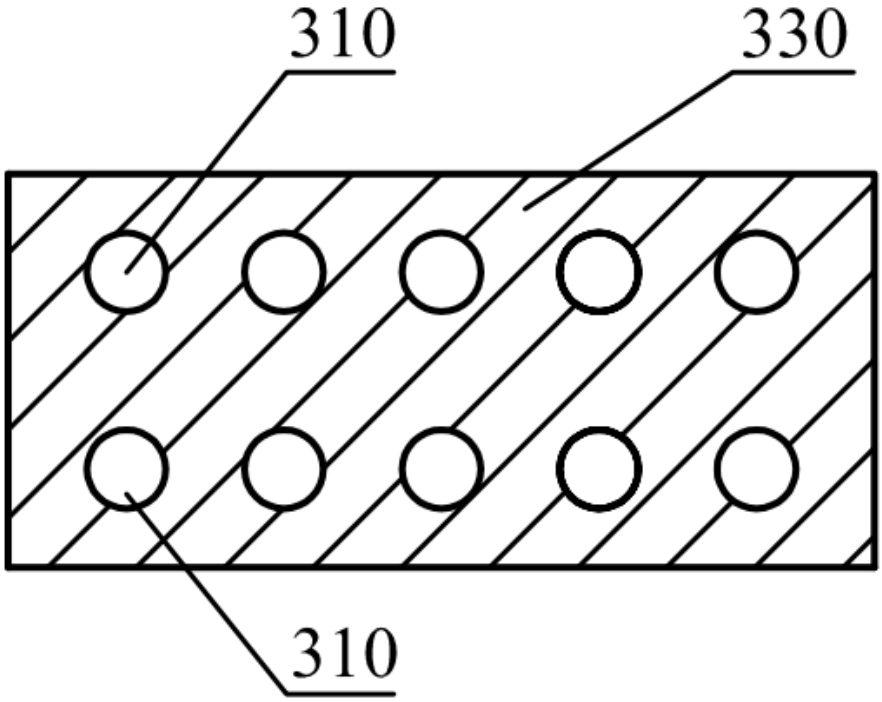

FIG. 3

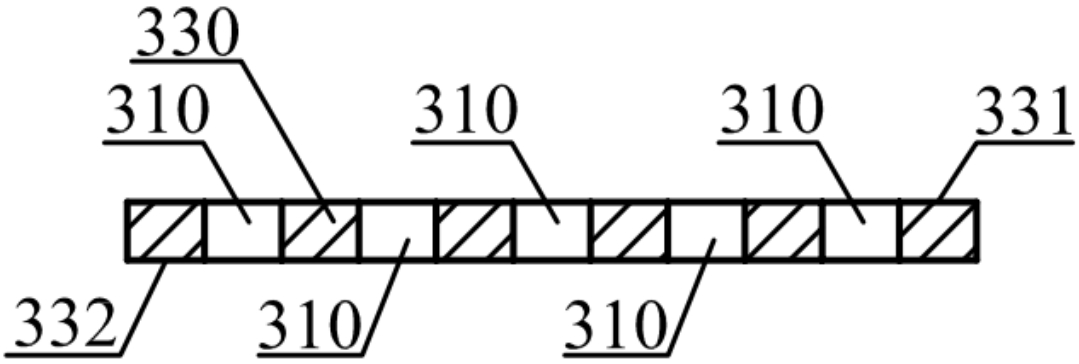

FIG. 4

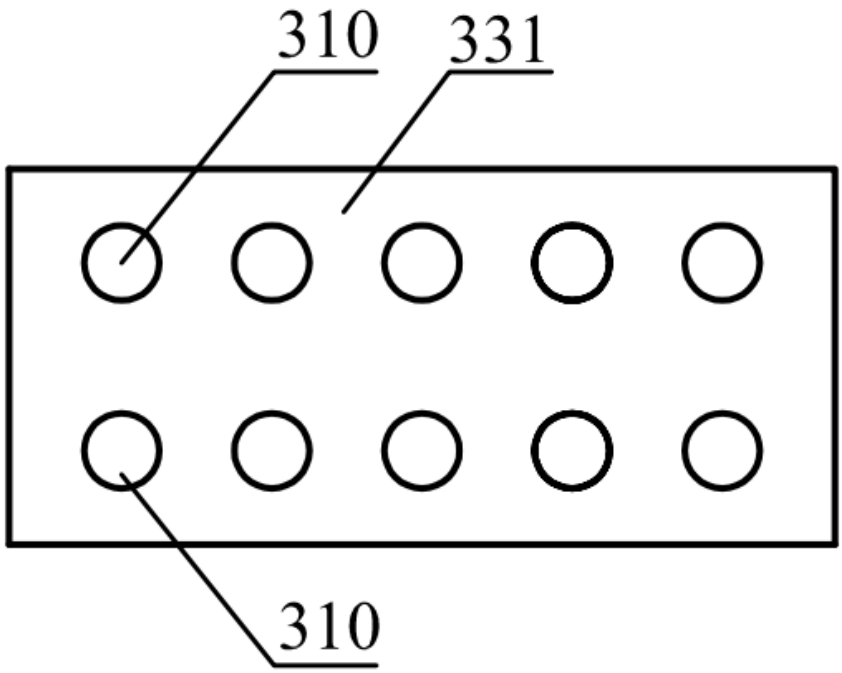

FIG. 5

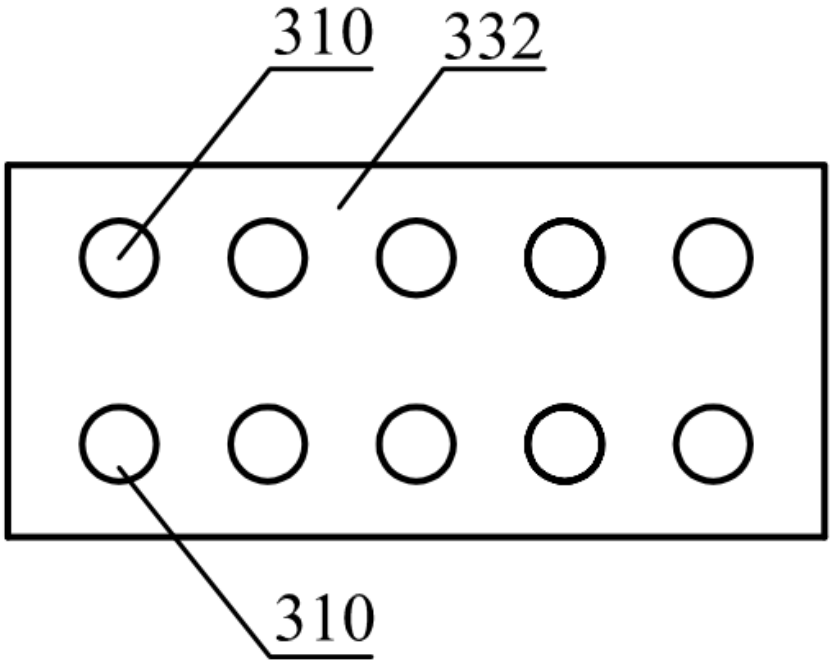

FIG. 6

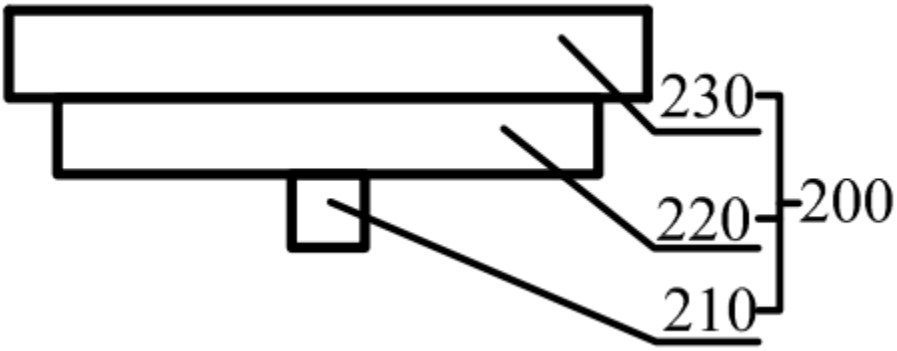
230
220
200
210

FIG. 7

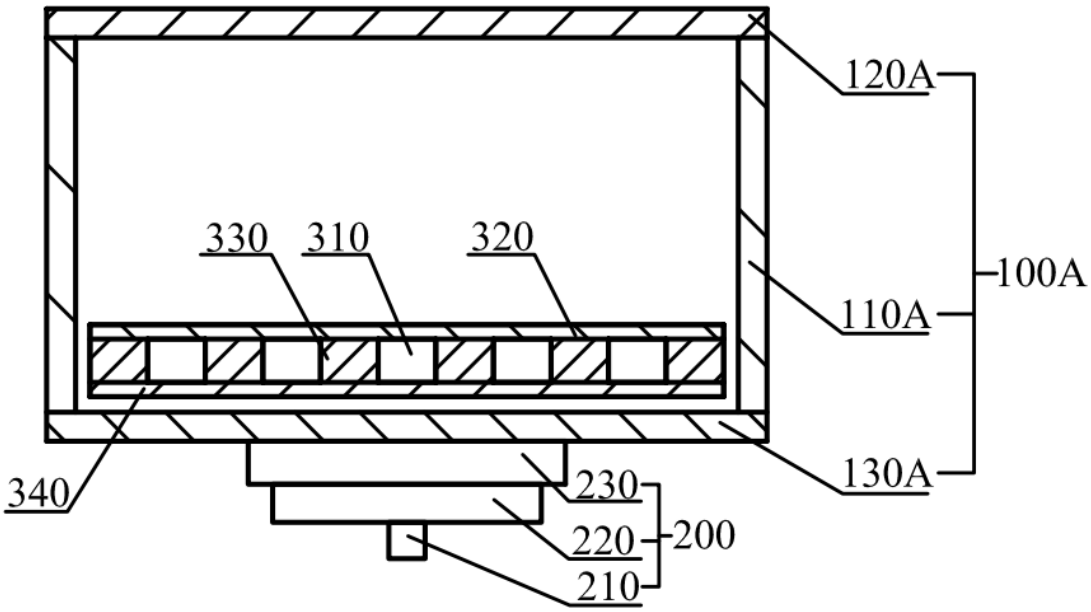
120A
330
310
320
100A
110A
130A
340
230
220
200
210

FIG. 8

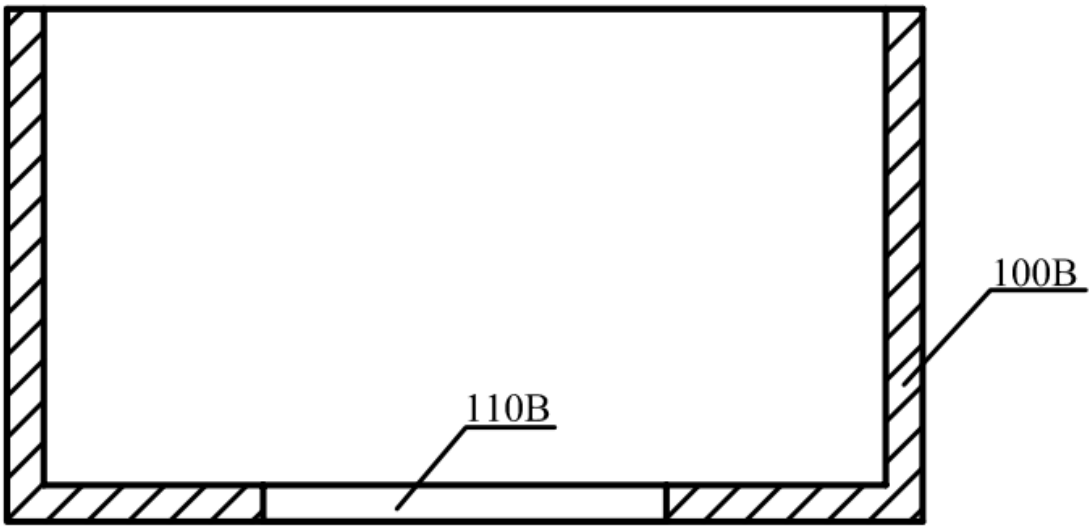

FIG. 9

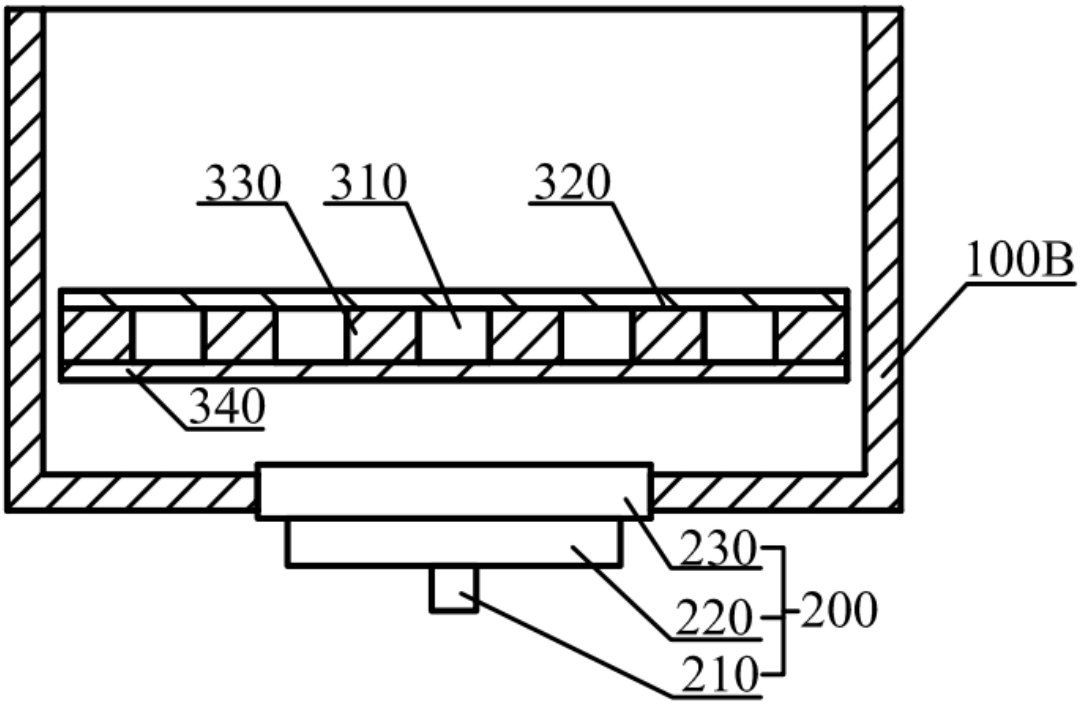

FIG. 10

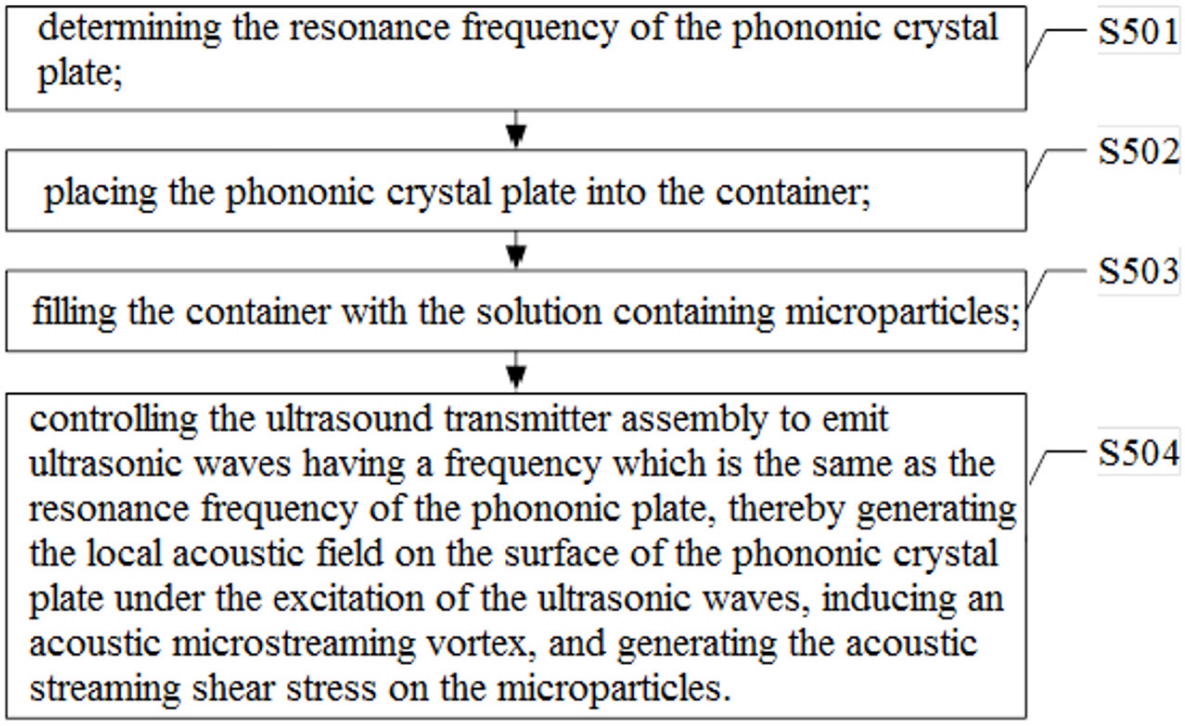
determining the resonance frequency of the phononic crystal plate;
S501
placing the phononic crystal plate into the container;
S502
filling the container with the solution containing microparticles;
S503
controlling the ultrasound transmitter assembly to emit ultrasonic waves having a frequency which is the same as the resonance frequency of the phononic plate, thereby generating the local acoustic field on the surface of the phononic crystal plate under the excitation of the ultrasonic waves, inducing an acoustic microstreaming vortex, and generating the acoustic streaming shear stress on the microparticles.
S504

FIG. 11