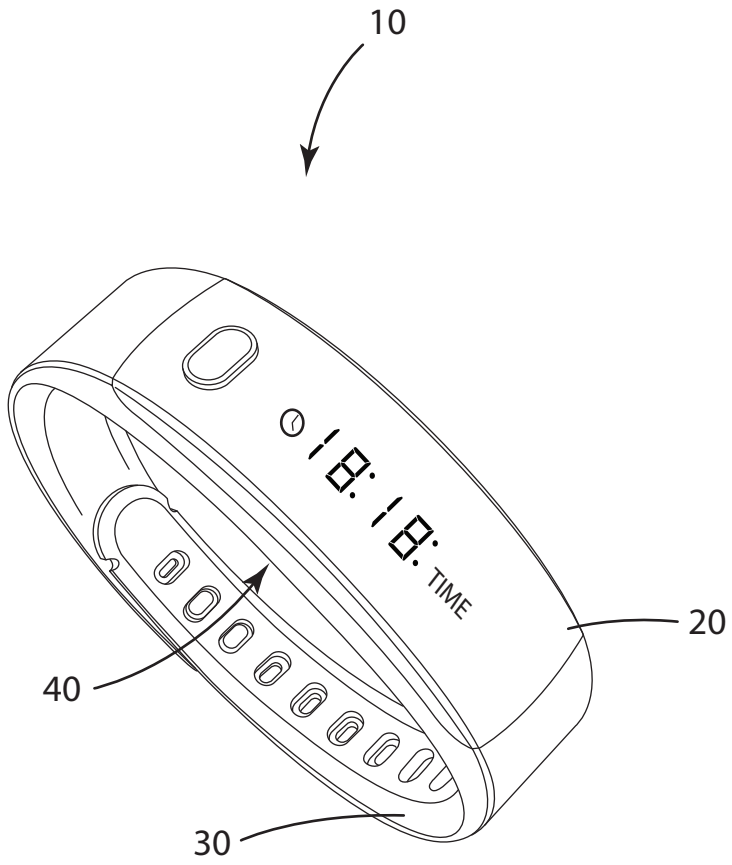

Fig. 1

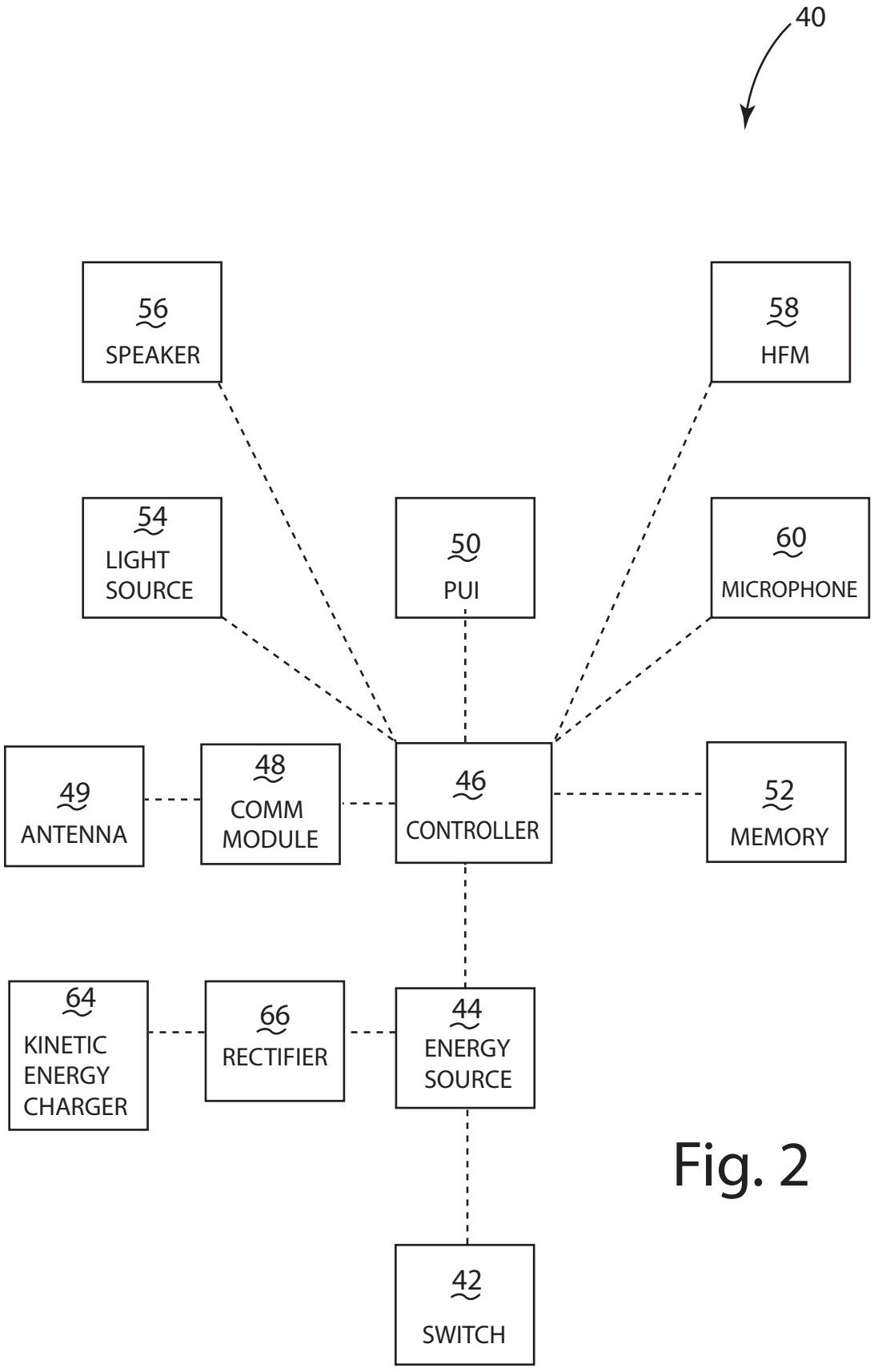
40
56
SPEAKER
58
HFM
54
LIGHT
SOURCE
50
PUI
60
MICROPHONE
49
ANTENNA
48
COMM
MODULE
46
CONTROLLER
52
MEMORY
64
KINETIC
ENERGY
CHARGER
66
RECTIFIER
44
ENERGY
SOURCE
42
SWITCH

Fig. 2

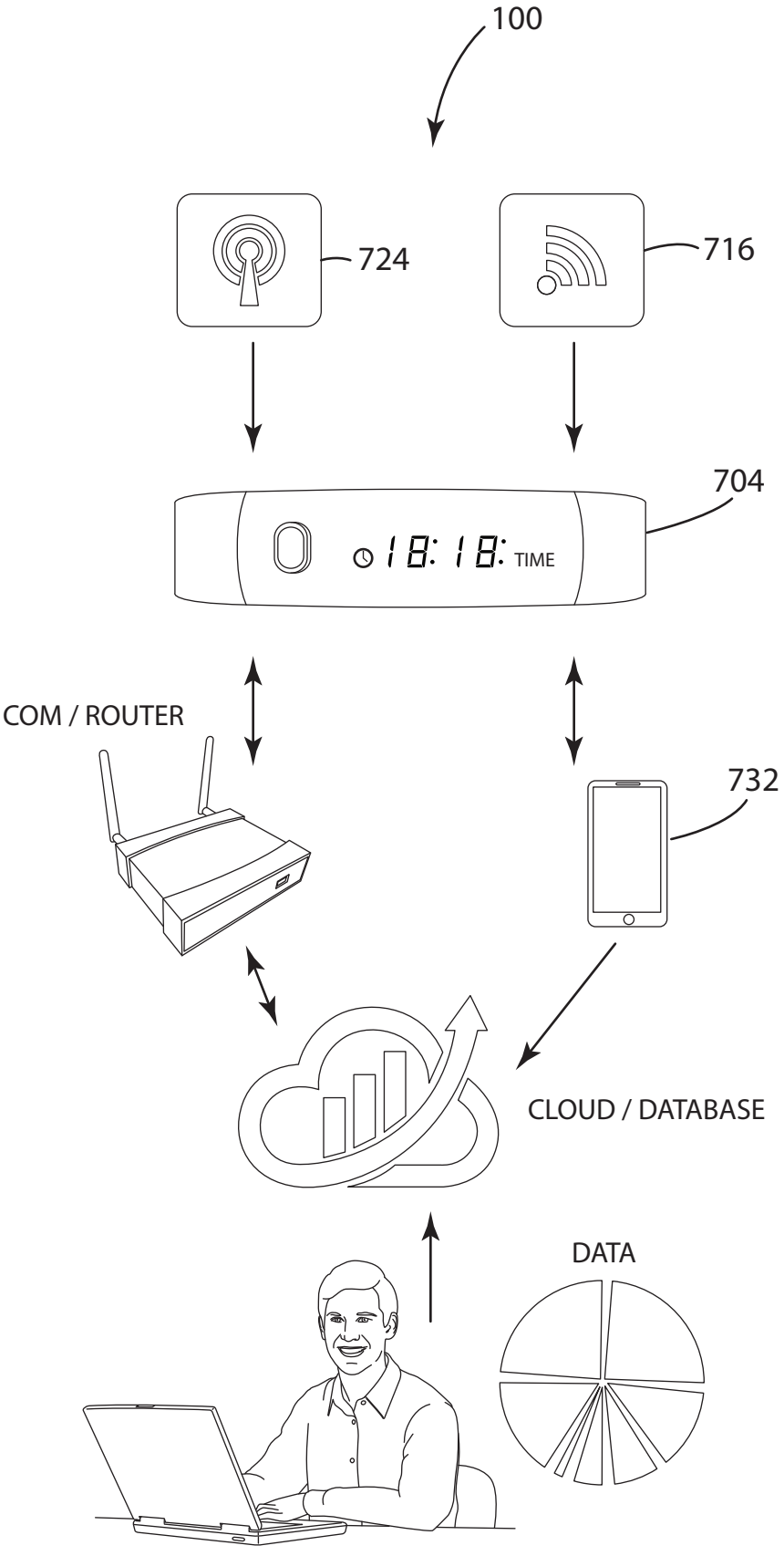

Fig. 3

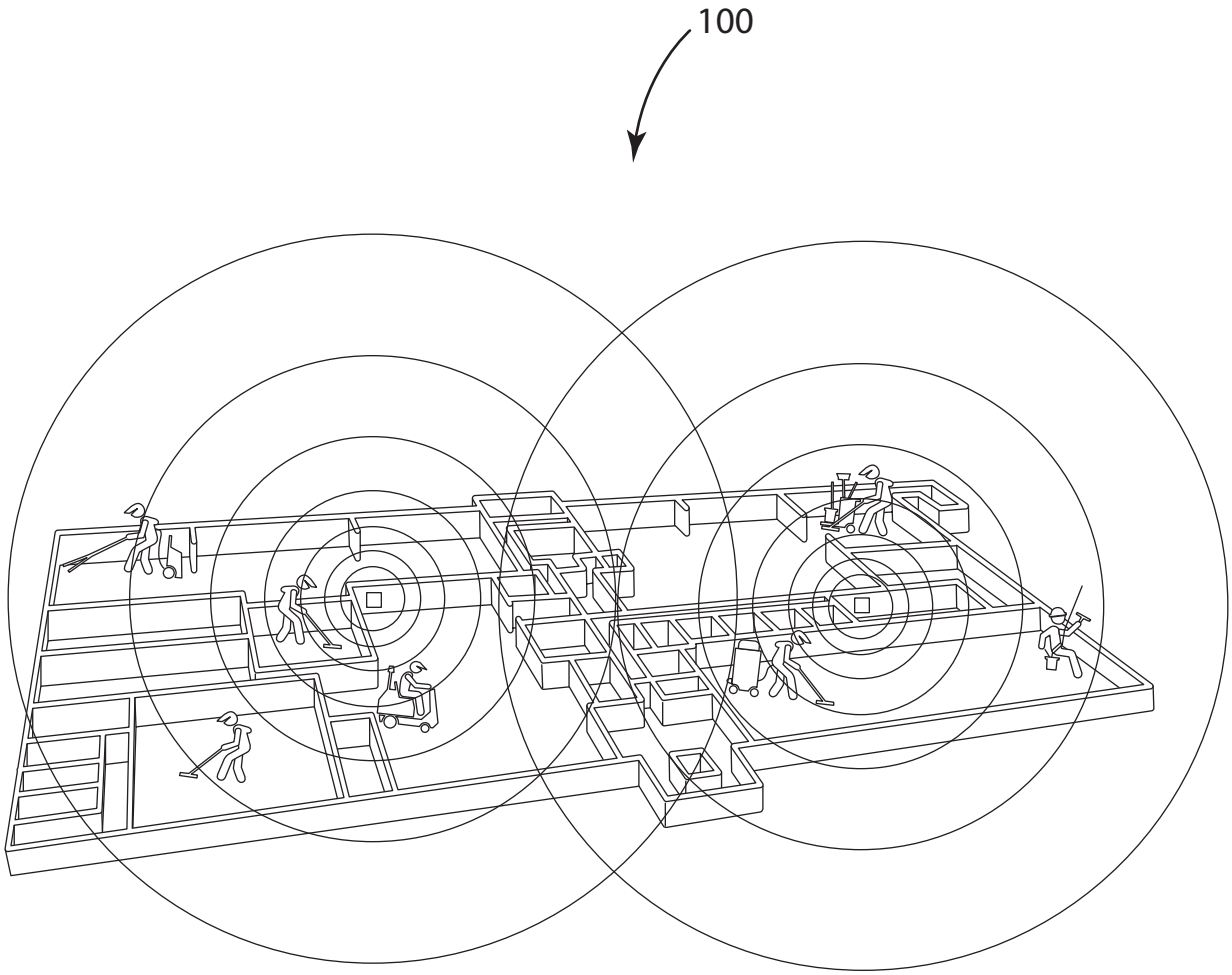

Fig. 4

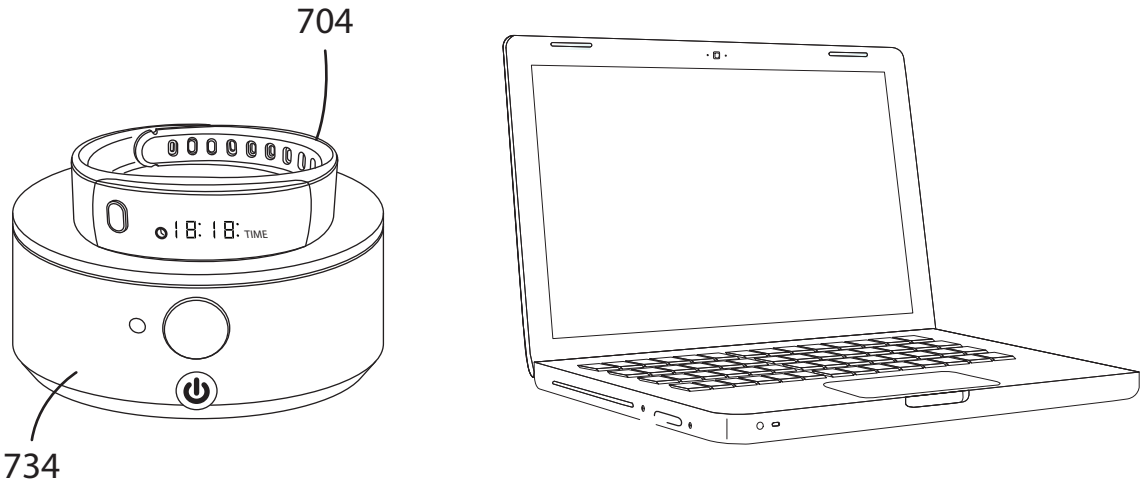

Fig. 5

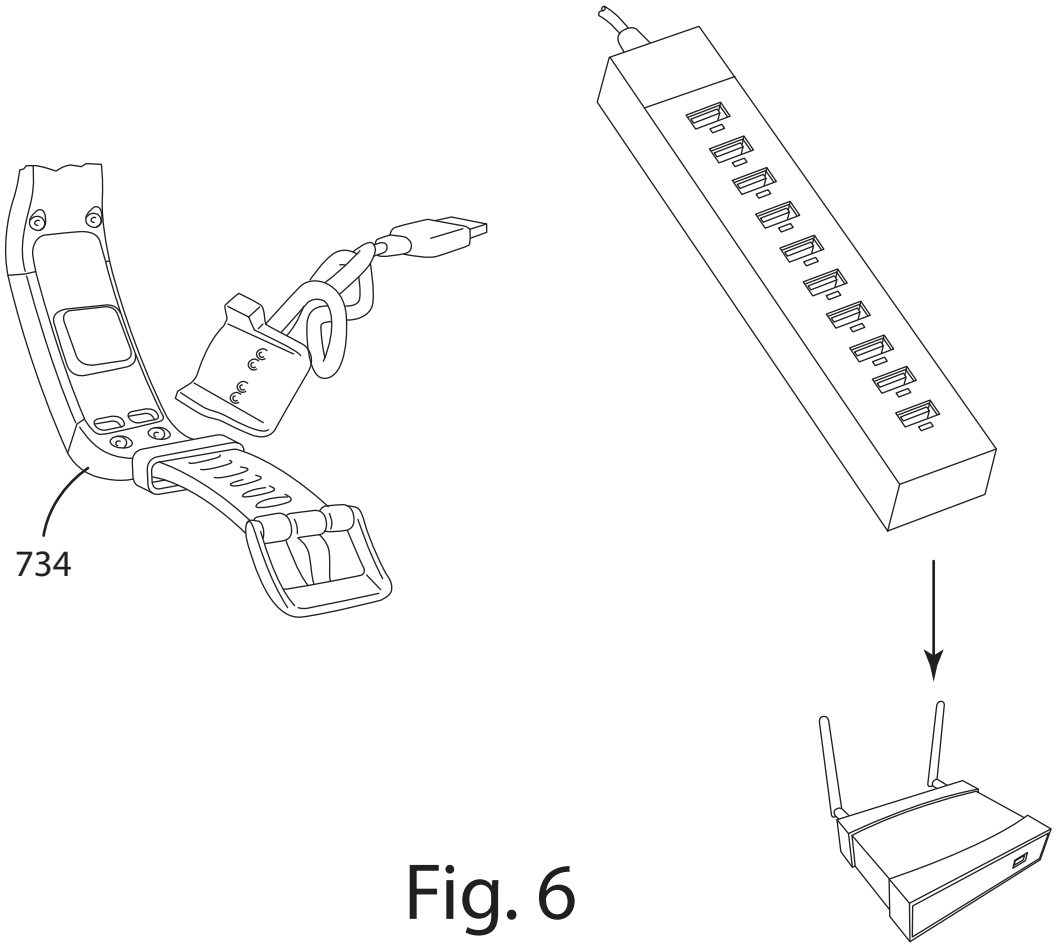

Fig. 6

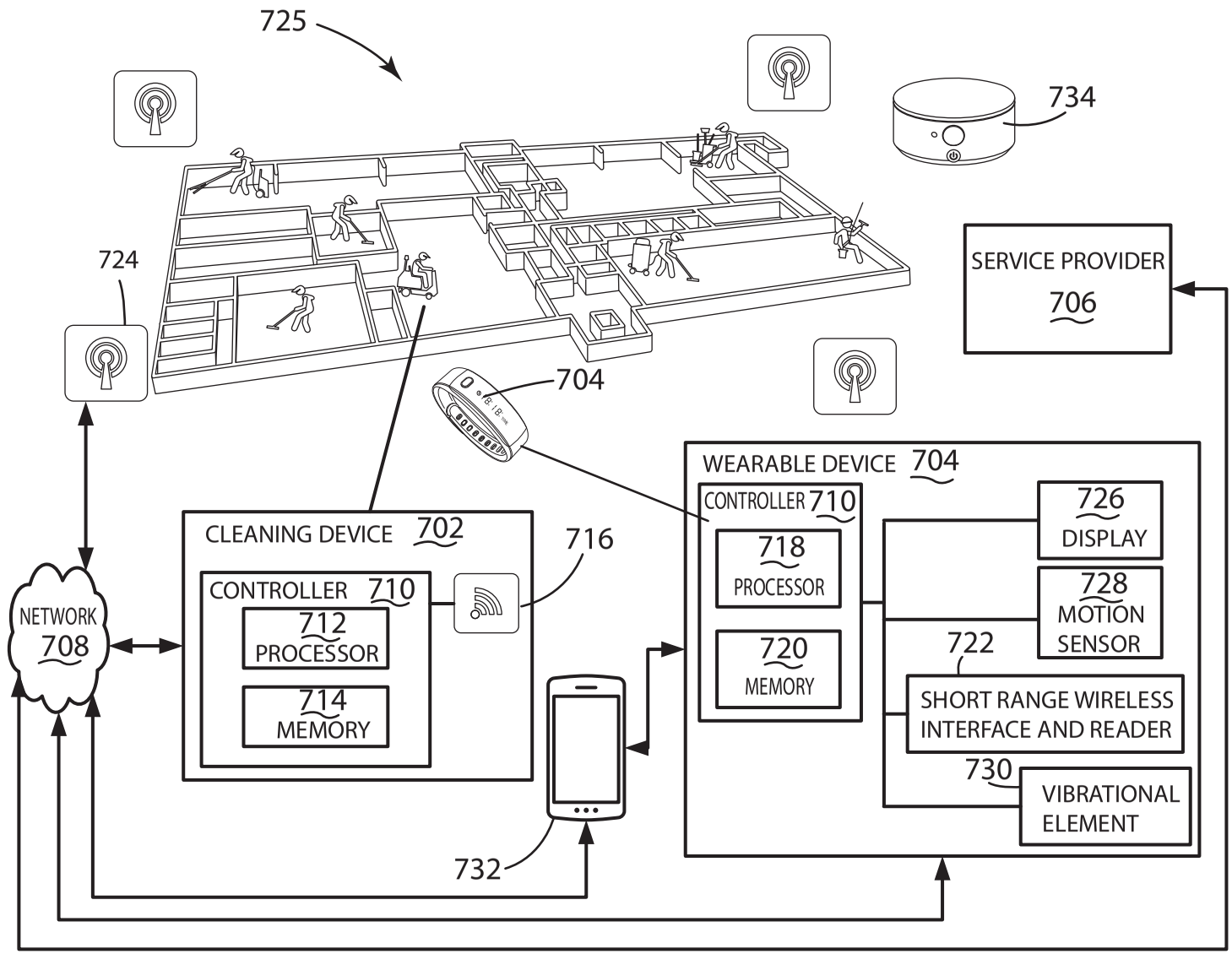
725
734
724
SERVICE PROVIDER
706
704
WEARABLE DEVICE 704
CONTROLLER 710
718
PROCESSOR
720
MEMORY
726
DISPLAY
728
MOTION
SENSOR
722
SHORT RANGE WIRELESS
INTERFACE AND READER
730
VIBRATIONAL
ELEMENT
CLEANING DEVICE 702
CONTROLLER 710
712
PROCESSOR
714
MEMORY
716
NETWORK
708
732

Fig. 7