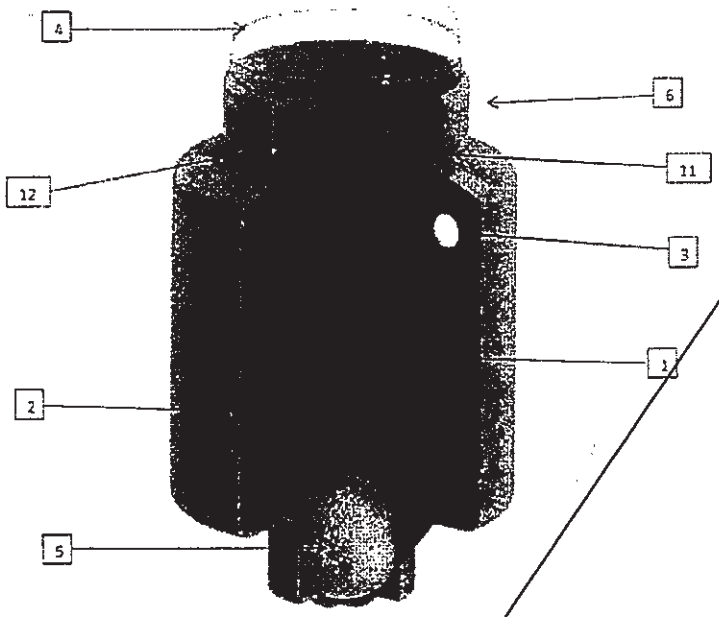

FIGURE 1

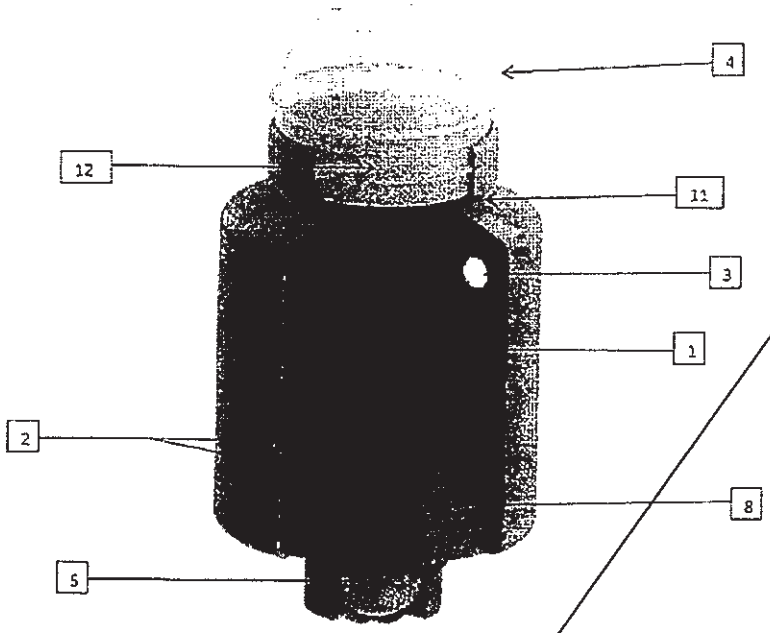

290

FIGURE 2

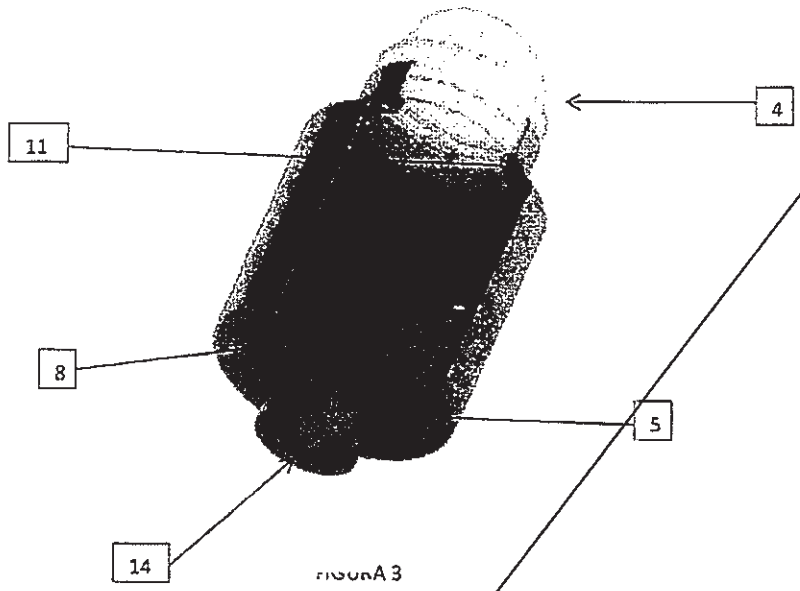

FIGURA 3

FIGURE 3

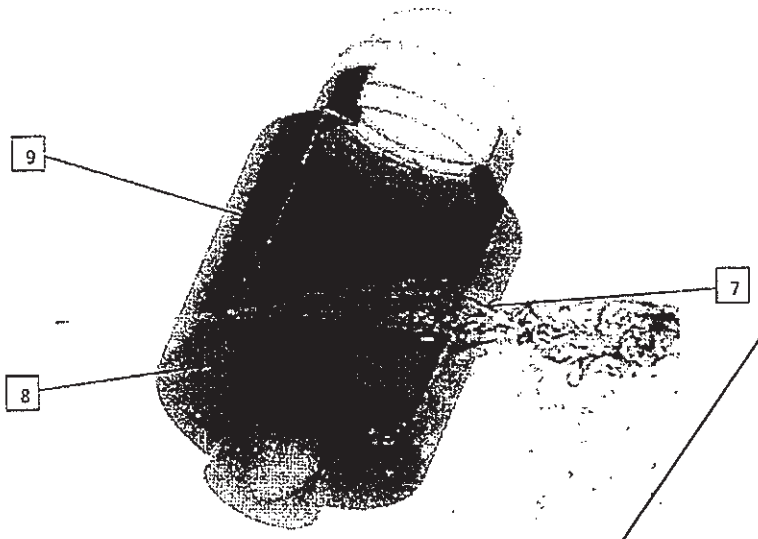

FIGURE 4

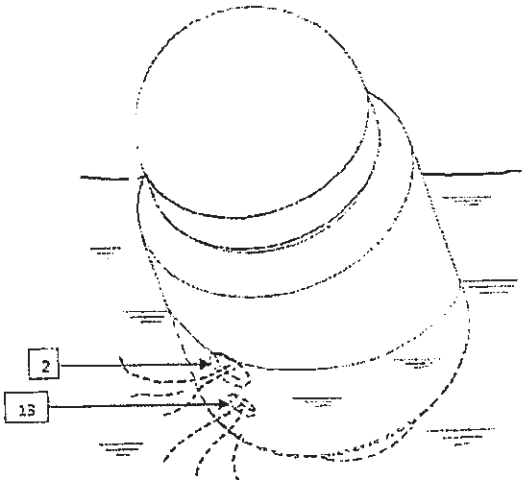

FIGURE 5

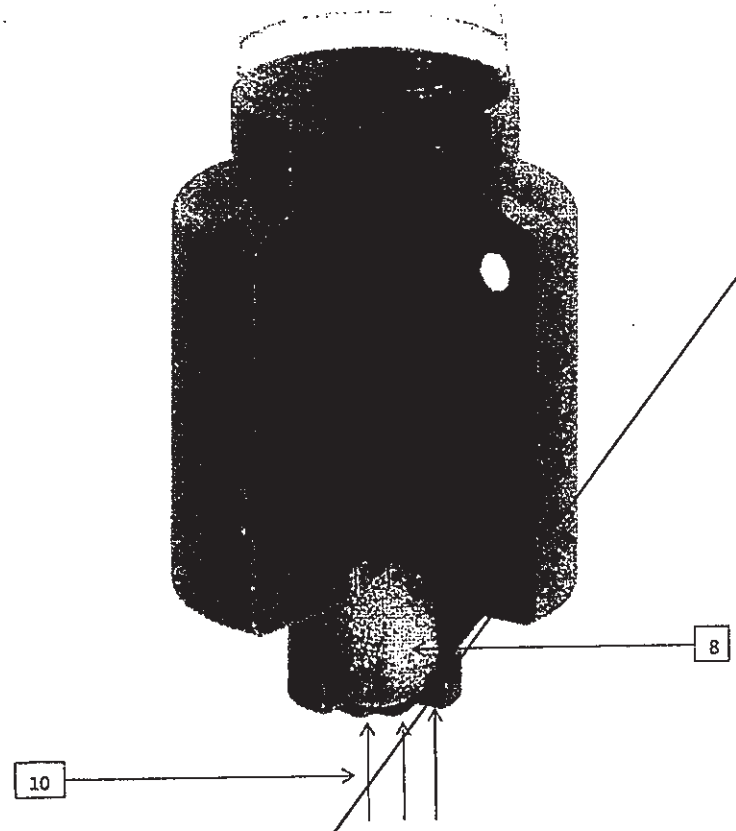

FIGURE 6

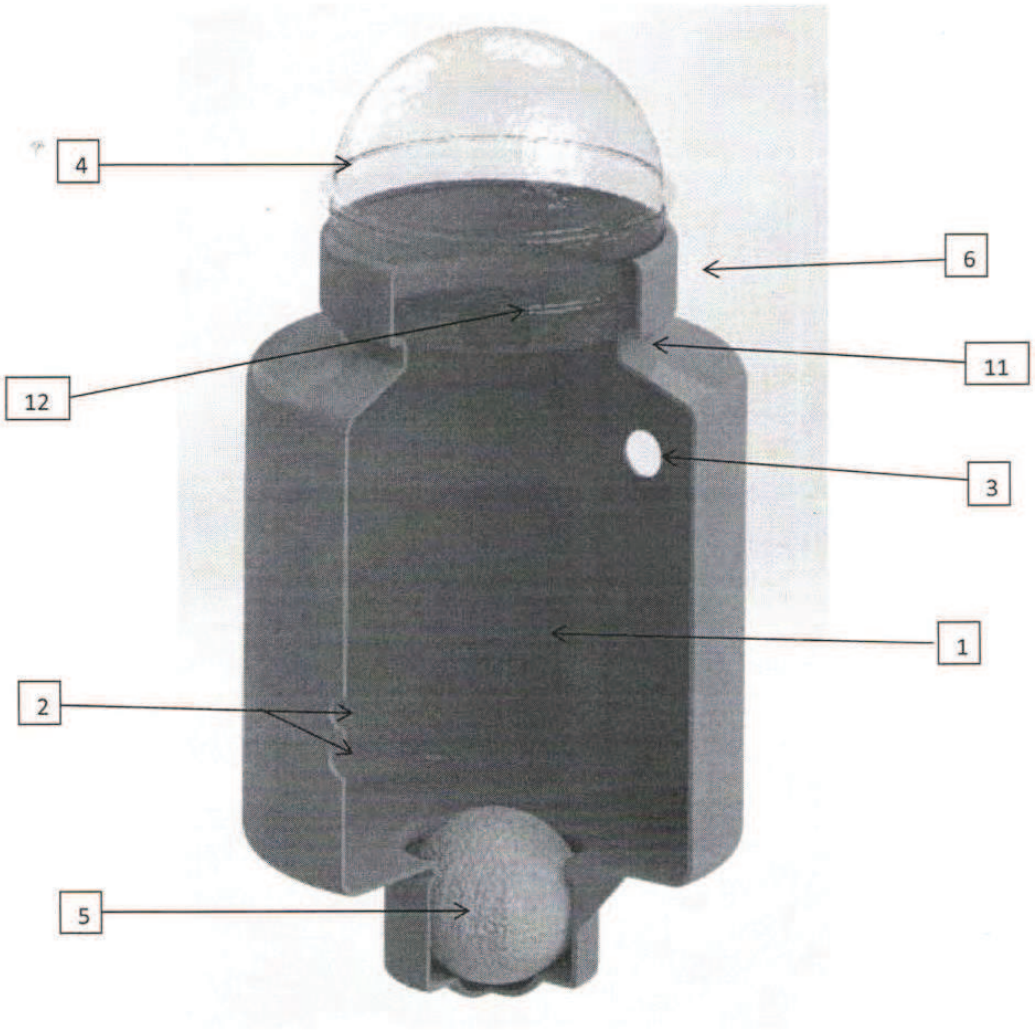

FIGURE 1

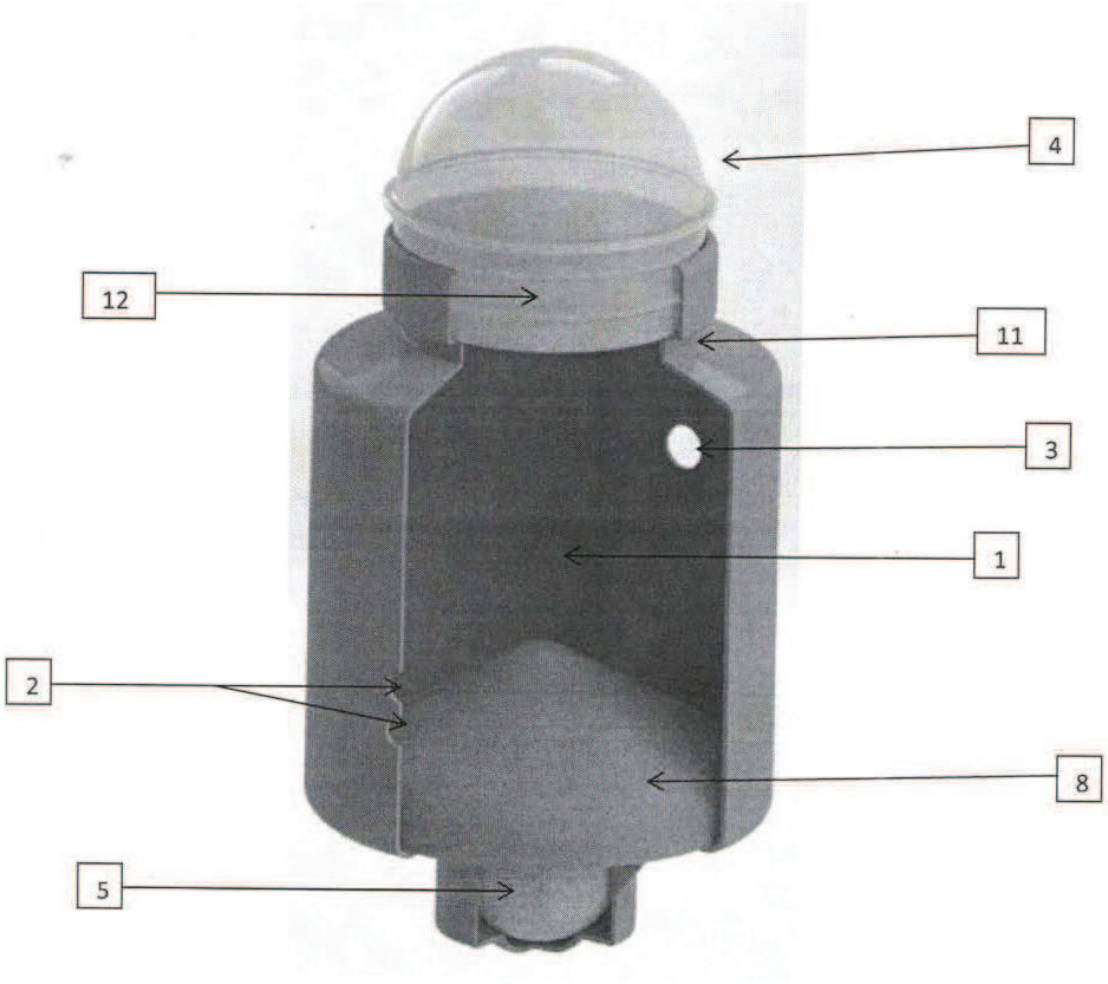

FIGURE 2

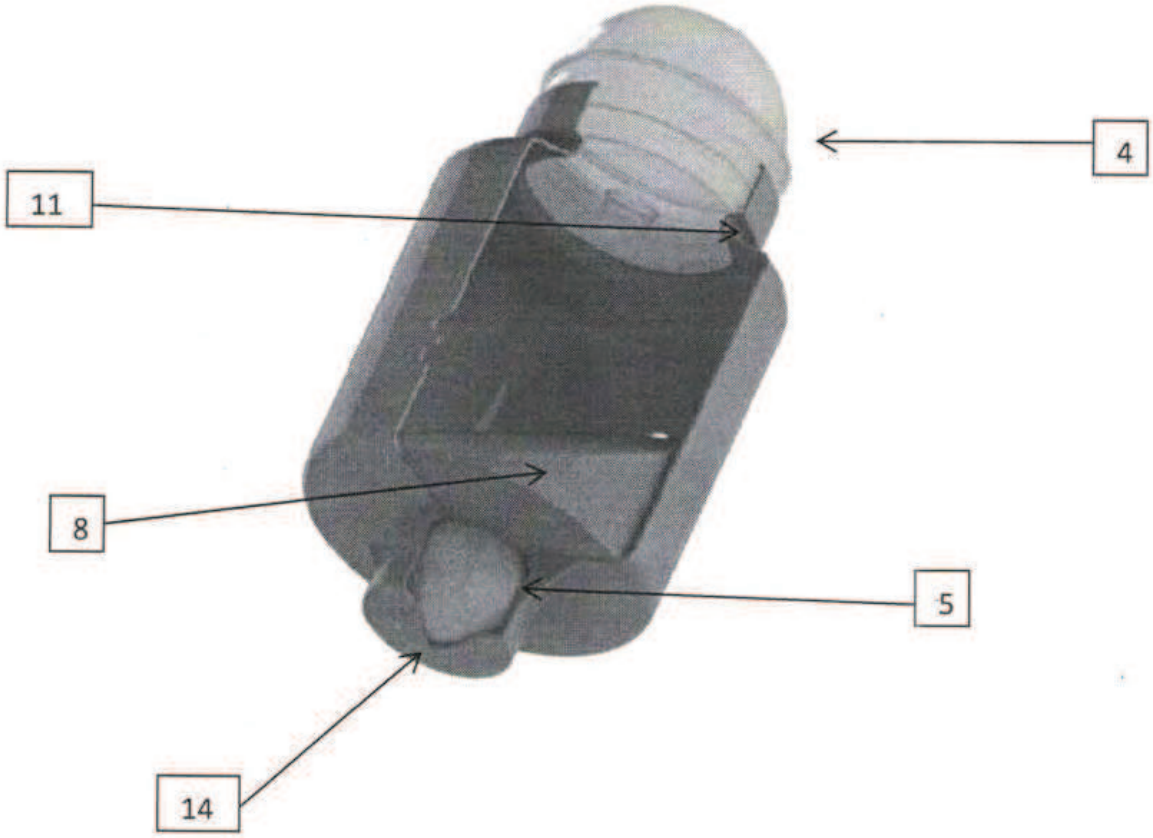

FIGURE 3

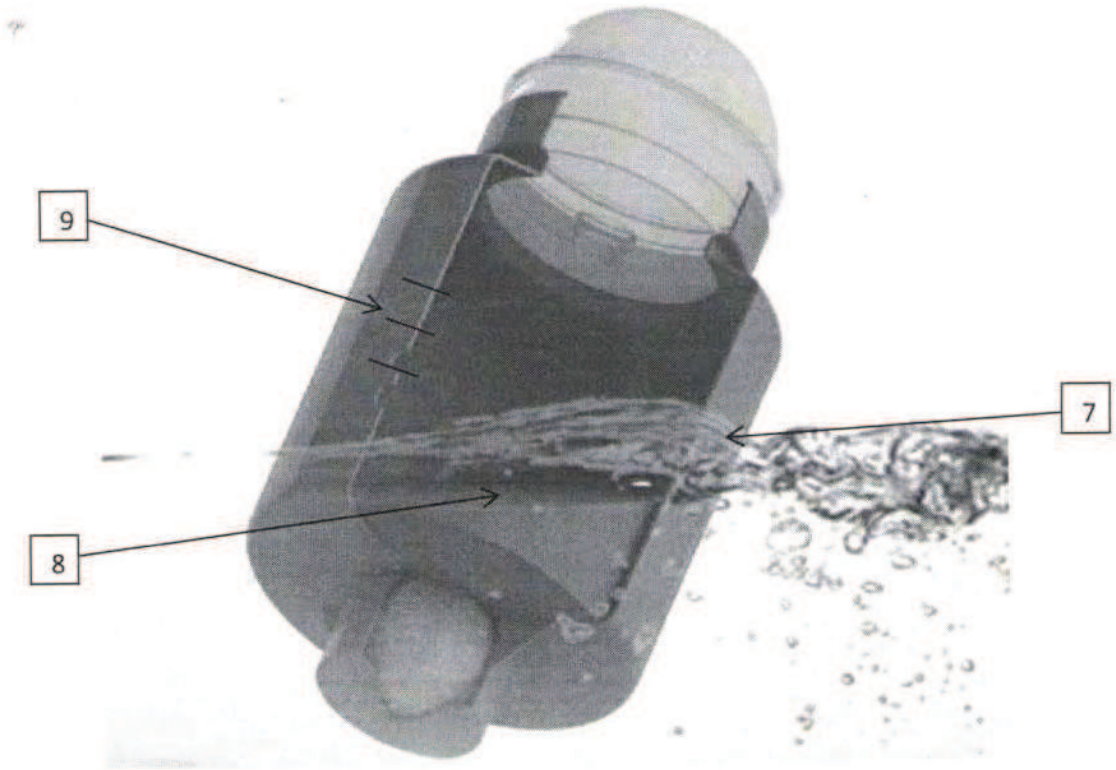

FIGURE 4

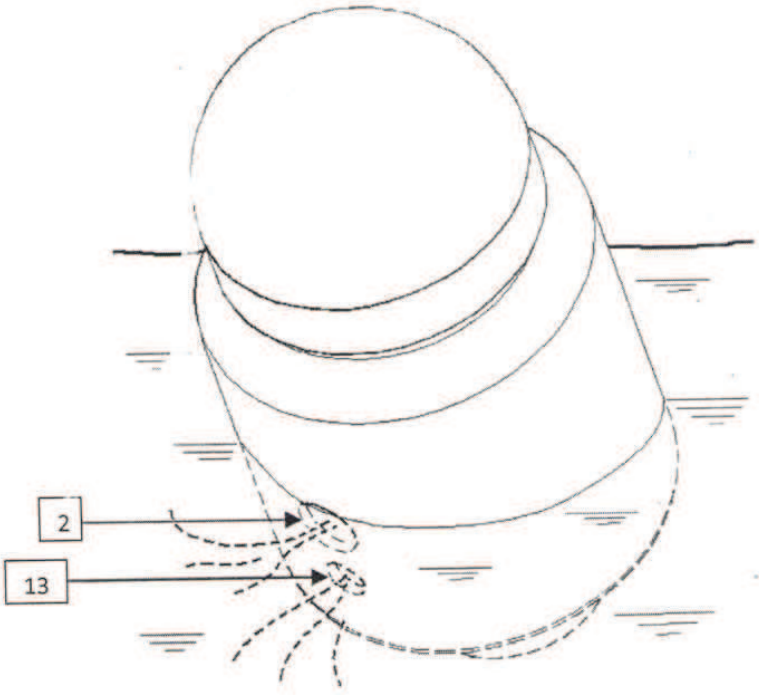

FIGURE 5

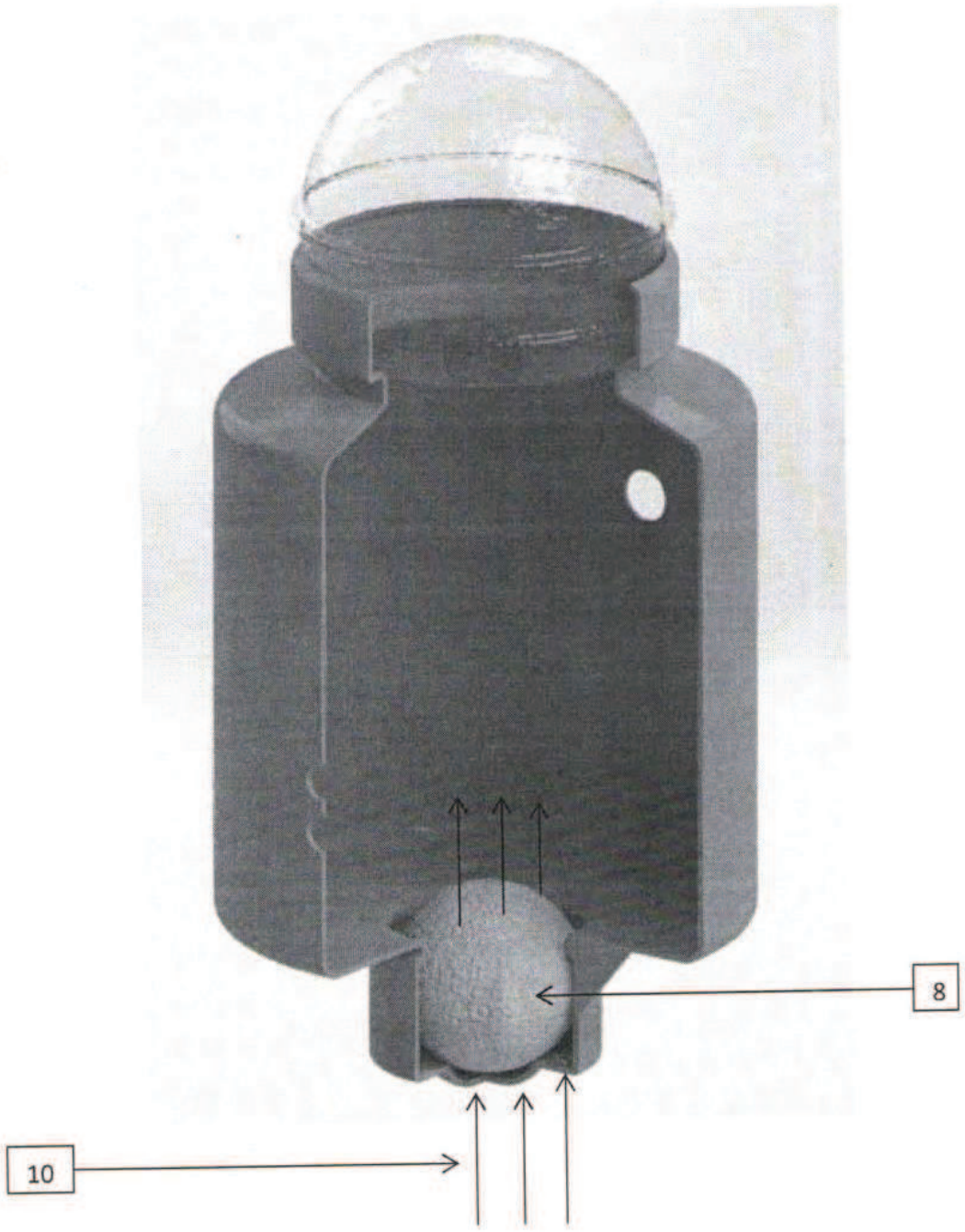

FIGURE 6