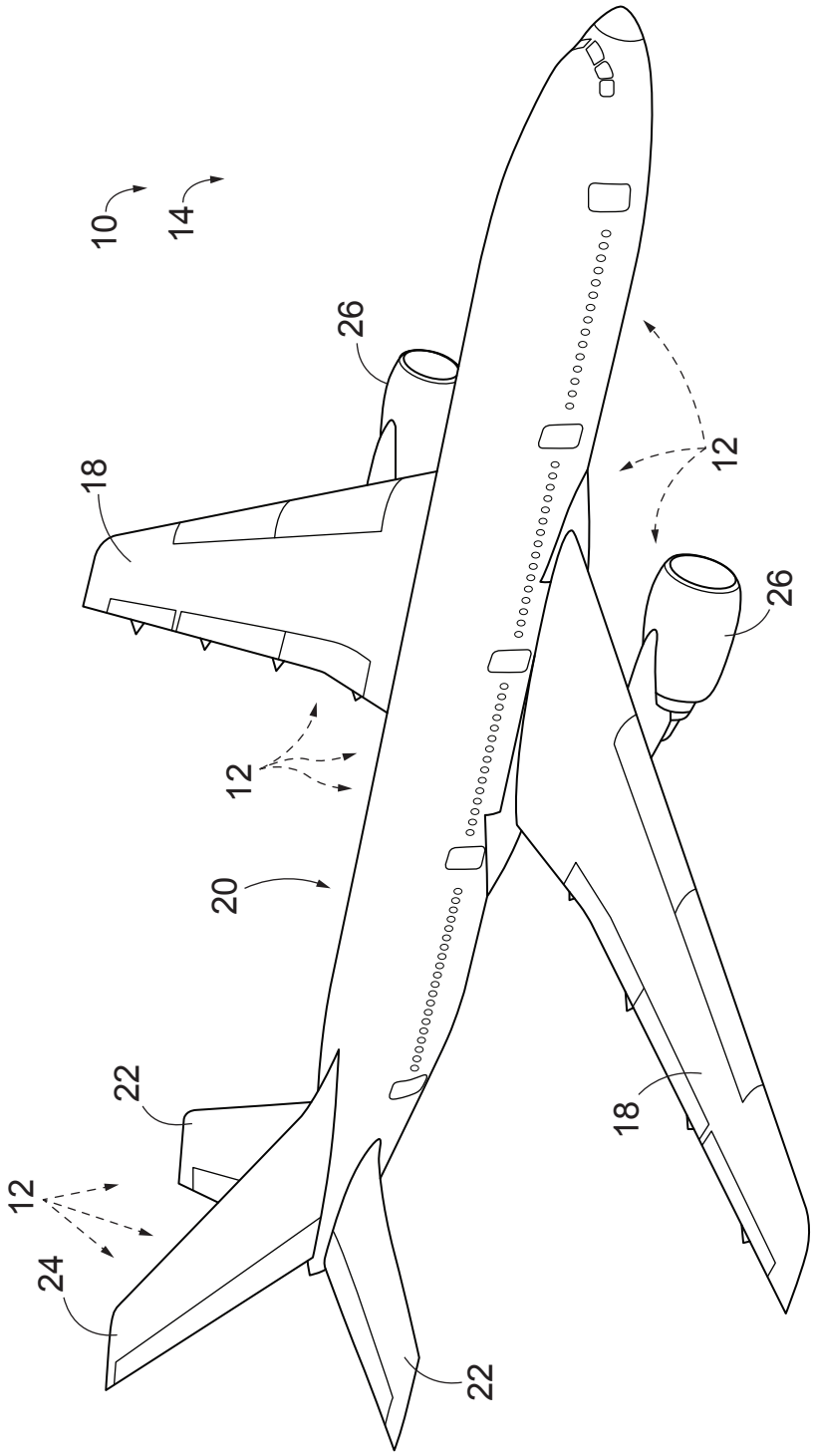

FIG. 1

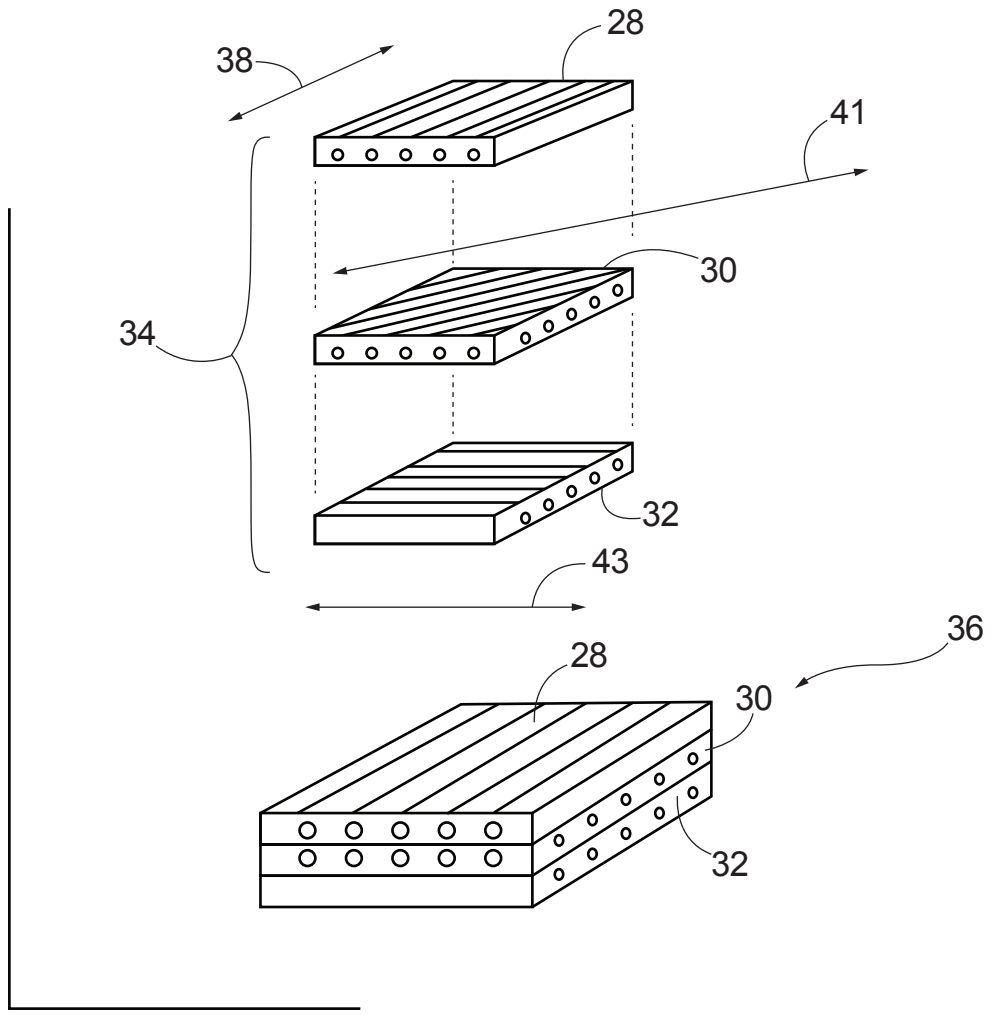

FIG. 2

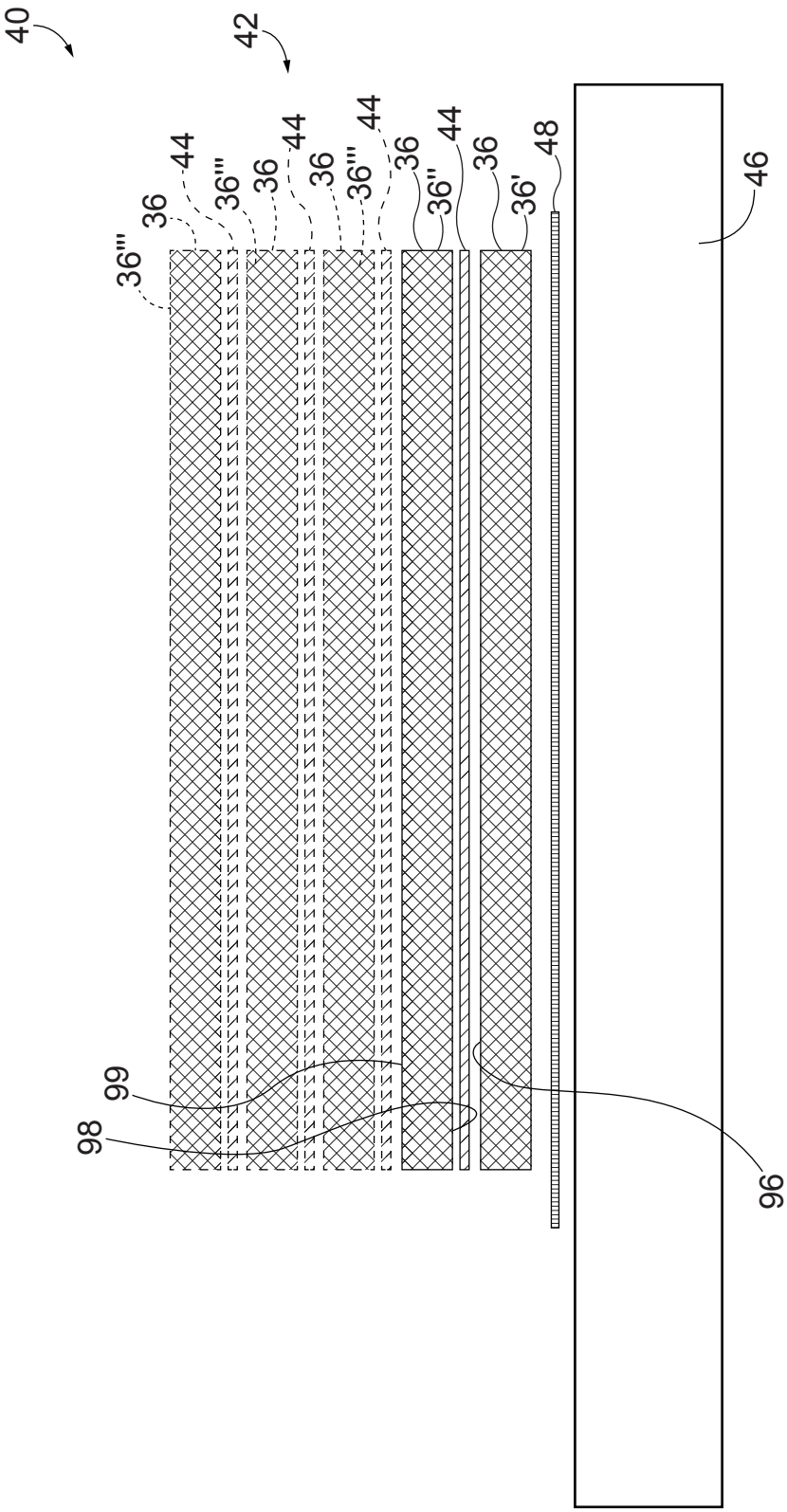

FIG. 3

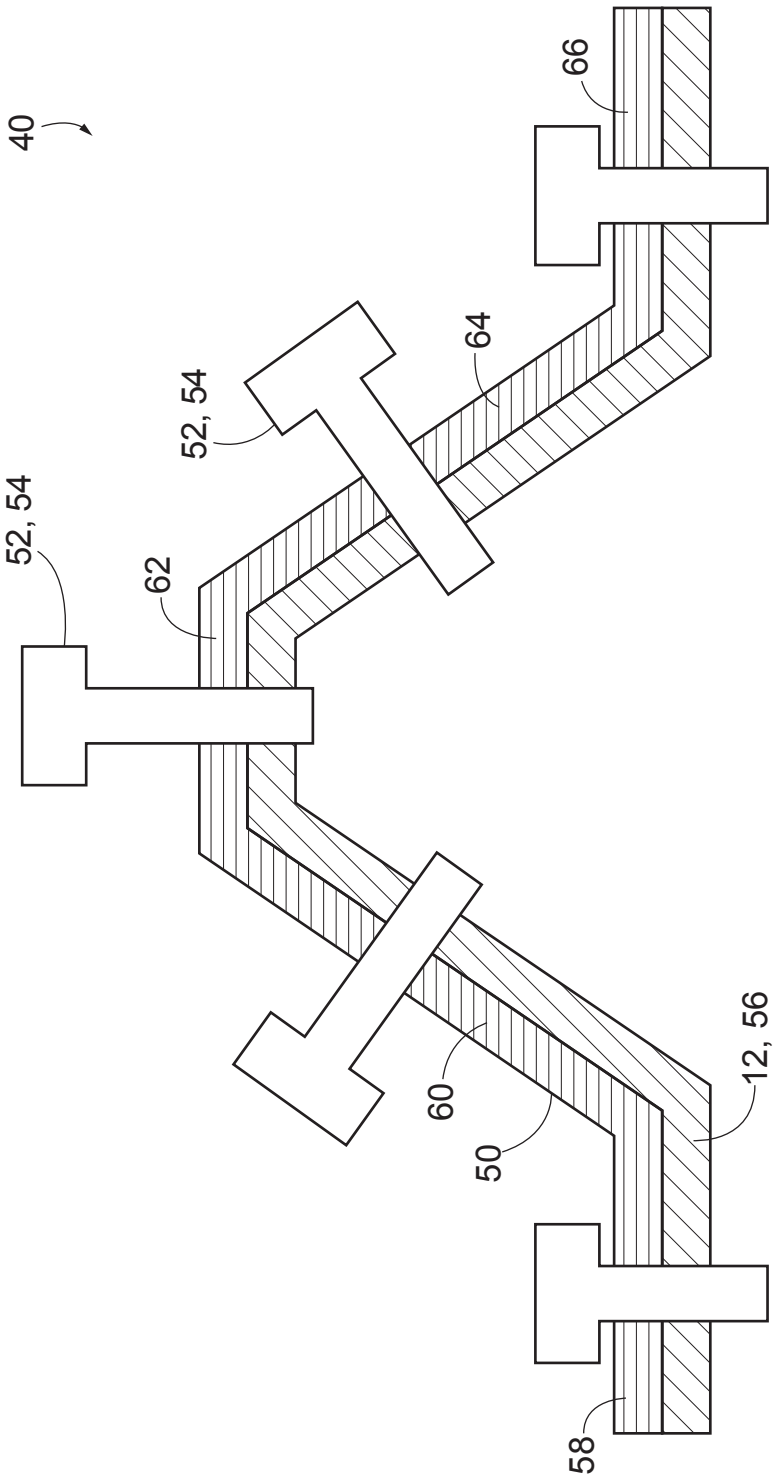

FIG. 4

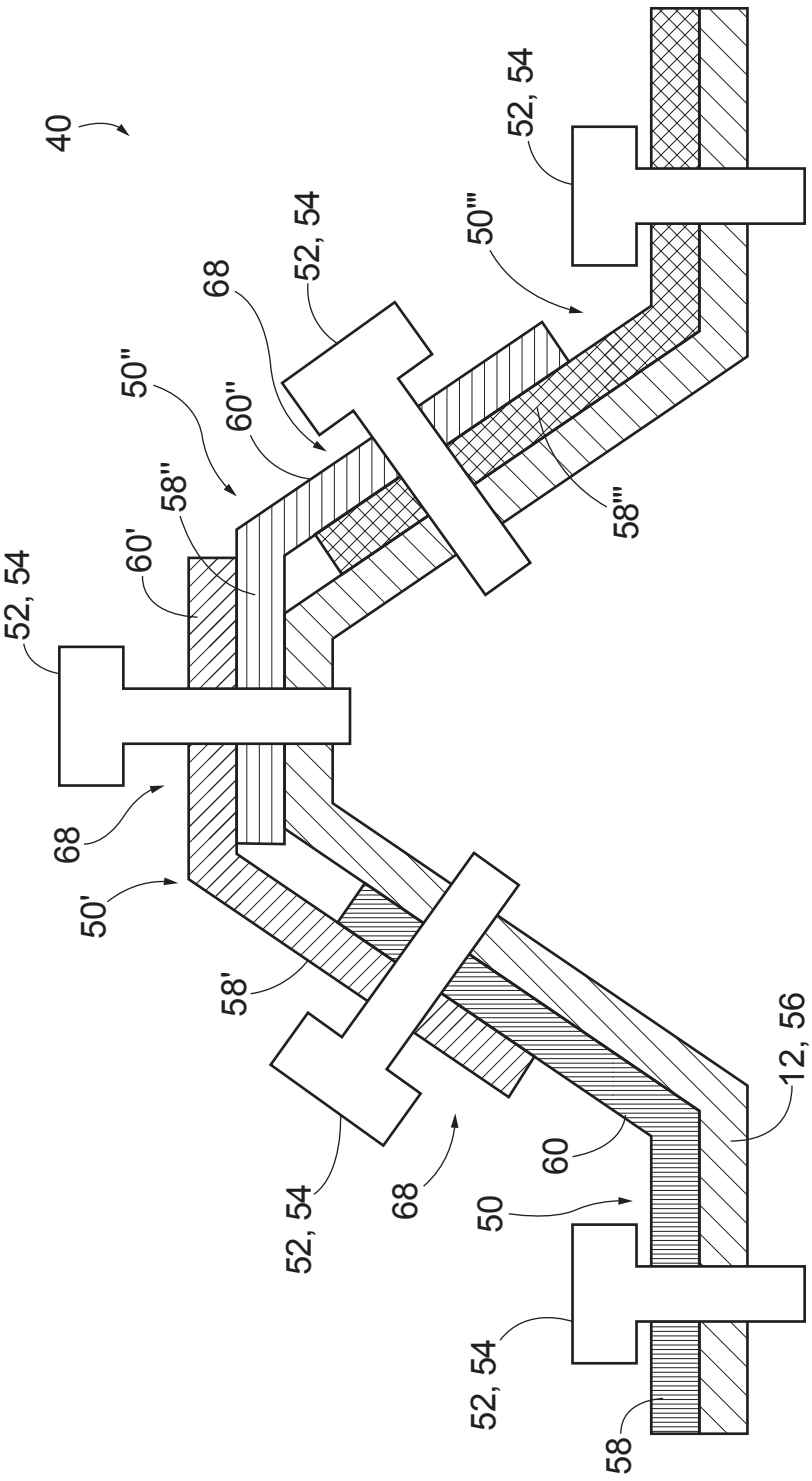
40
52, 54
50'''
68
52, 54
50''
60''
58''
60'
52, 54
58'''
68
50'
58'
12, 56
52, 54
68
60
50
52, 54
58

FIG. 5

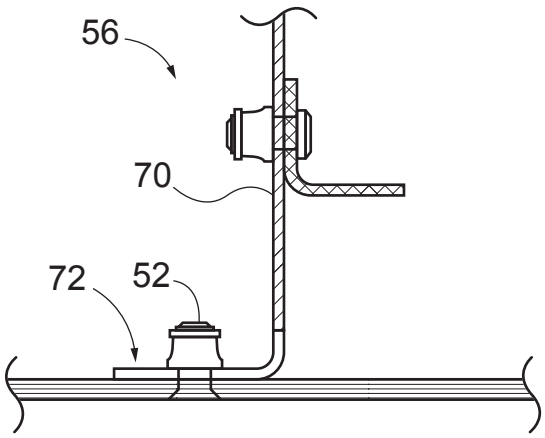

FIG. 6
(PRIOR ART)

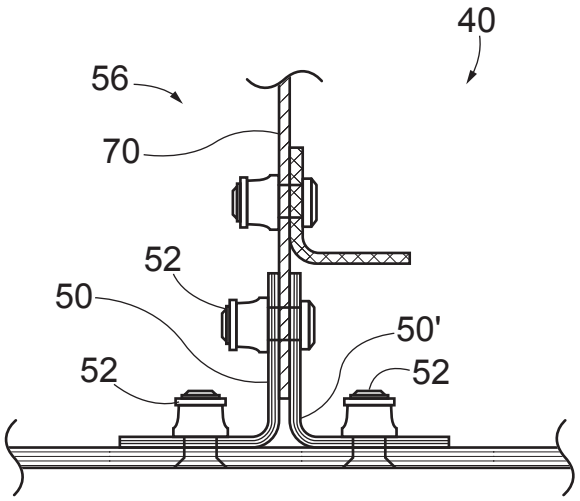

FIG. 7

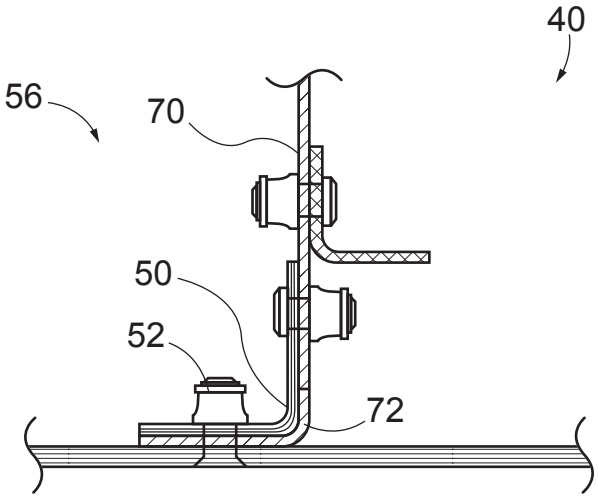

FIG. 8

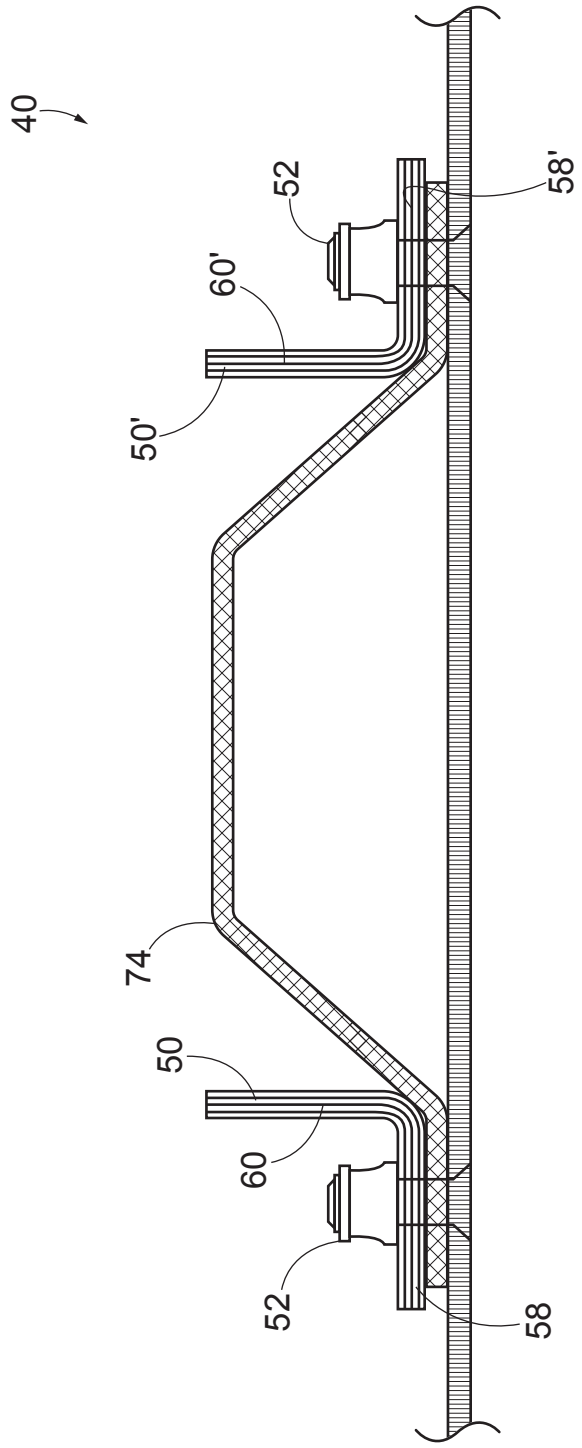

FIG. 9

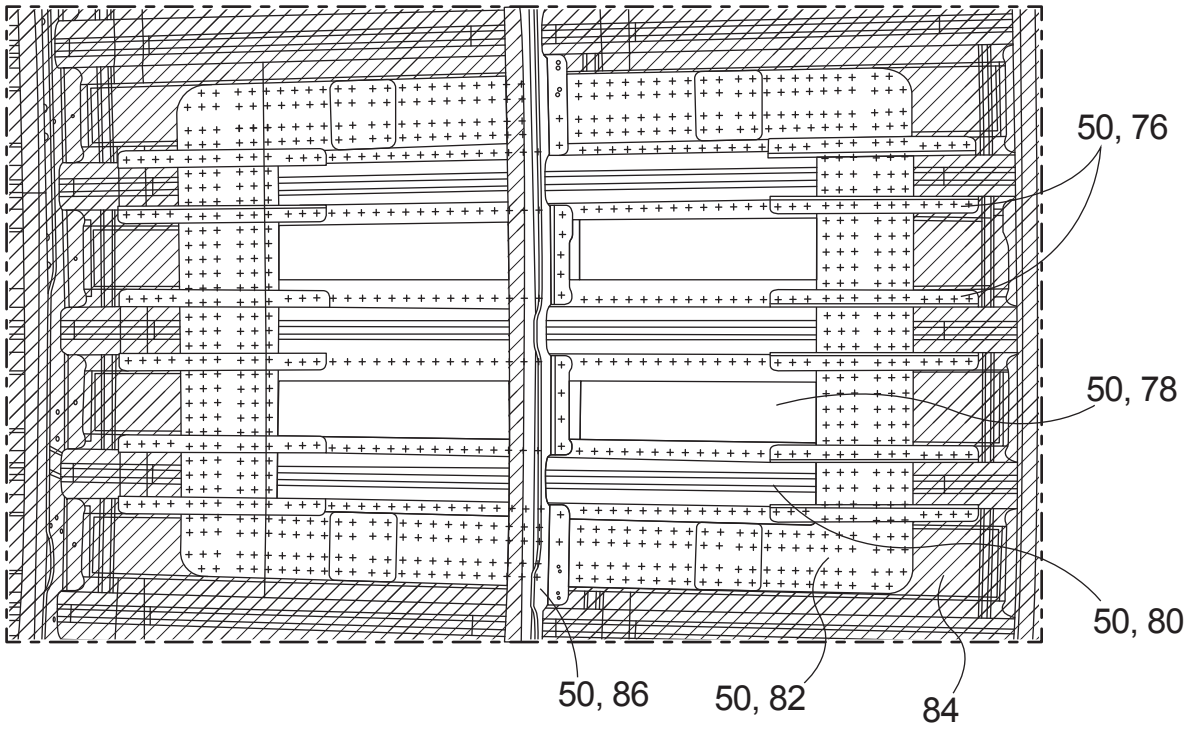

FIG. 10

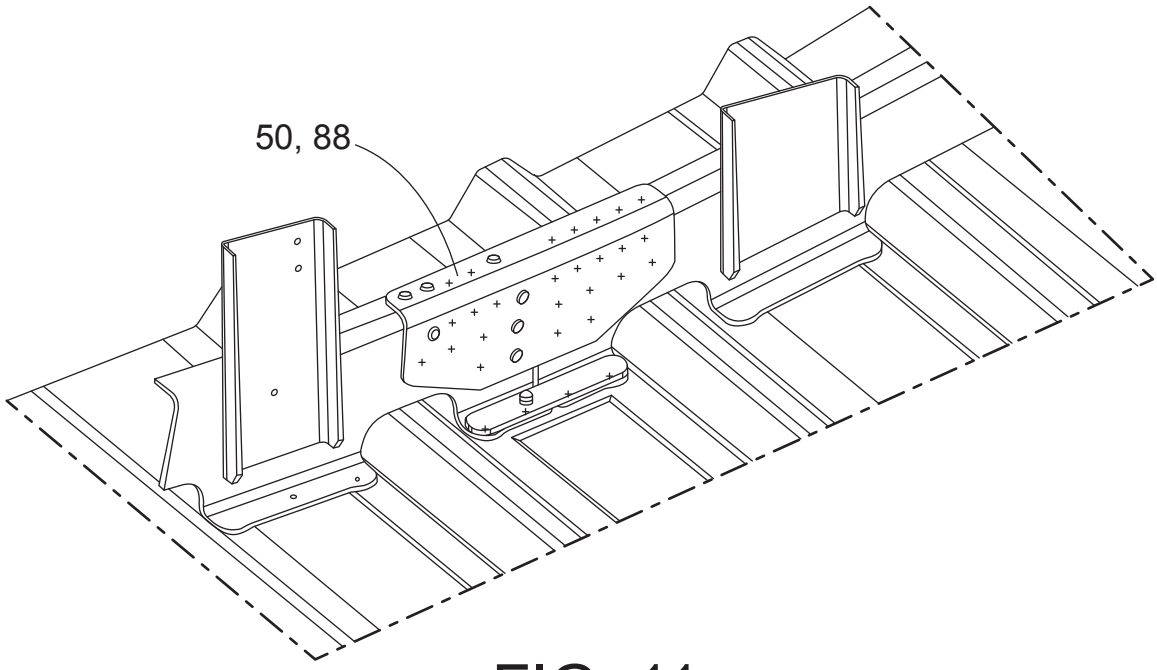

FIG. 11

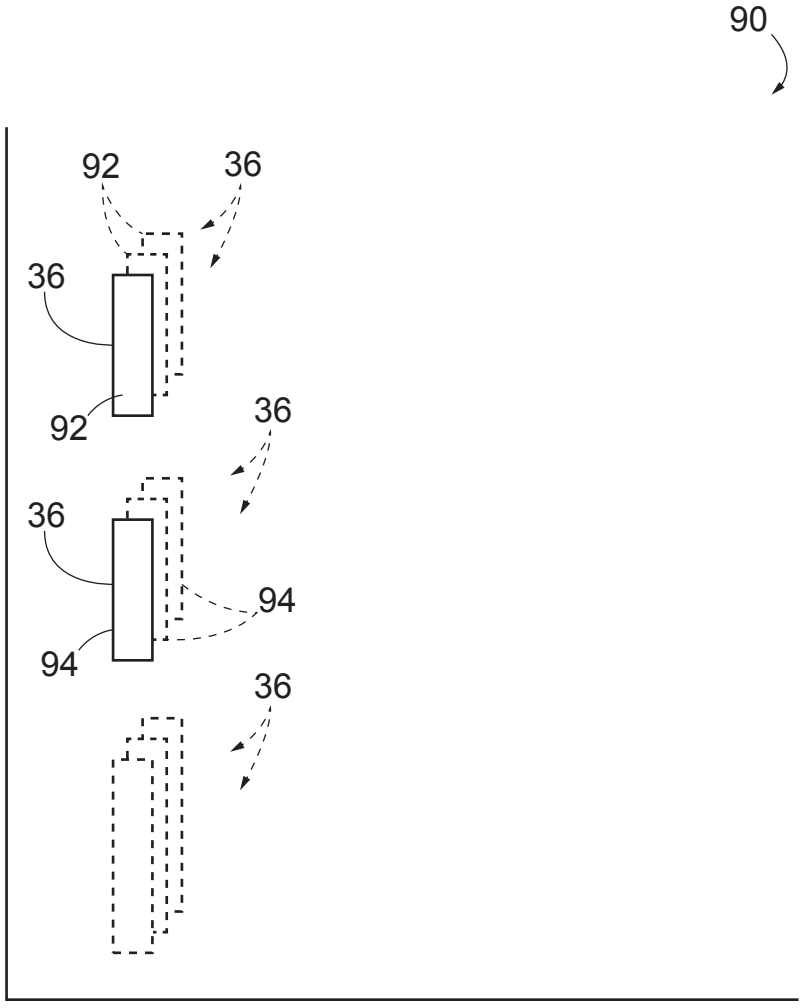

FIG. 12

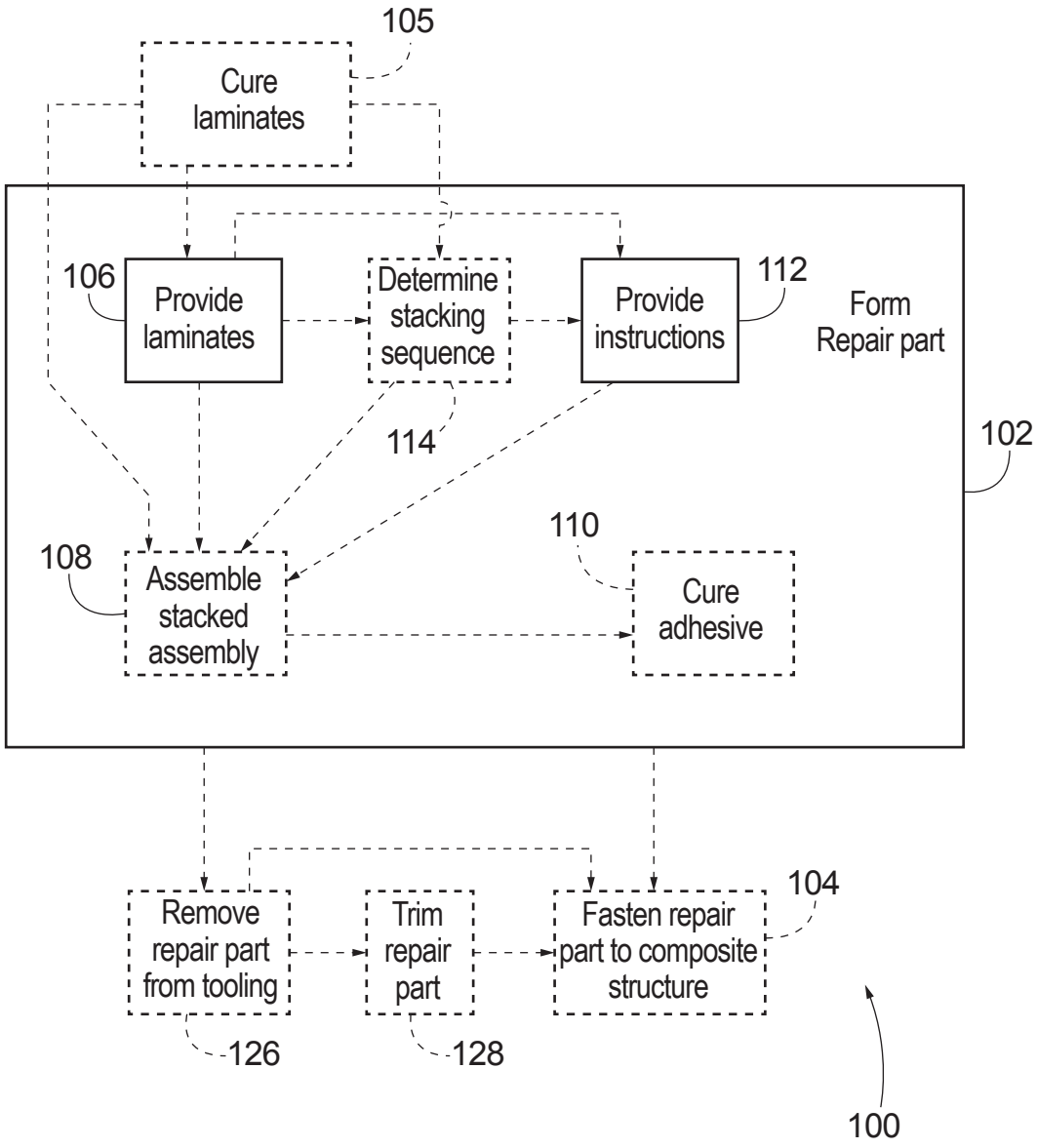
105
Cure laminates
106
Provide laminates
Determine stacking sequence
Provide instructions
112
Form Repair part
102
114
108
Assemble stacked assembly
110
Cure adhesive
Remove repair part from tooling
Trim repair part
Fasten repair part to composite structure
104
126
128
100

FIG. 13

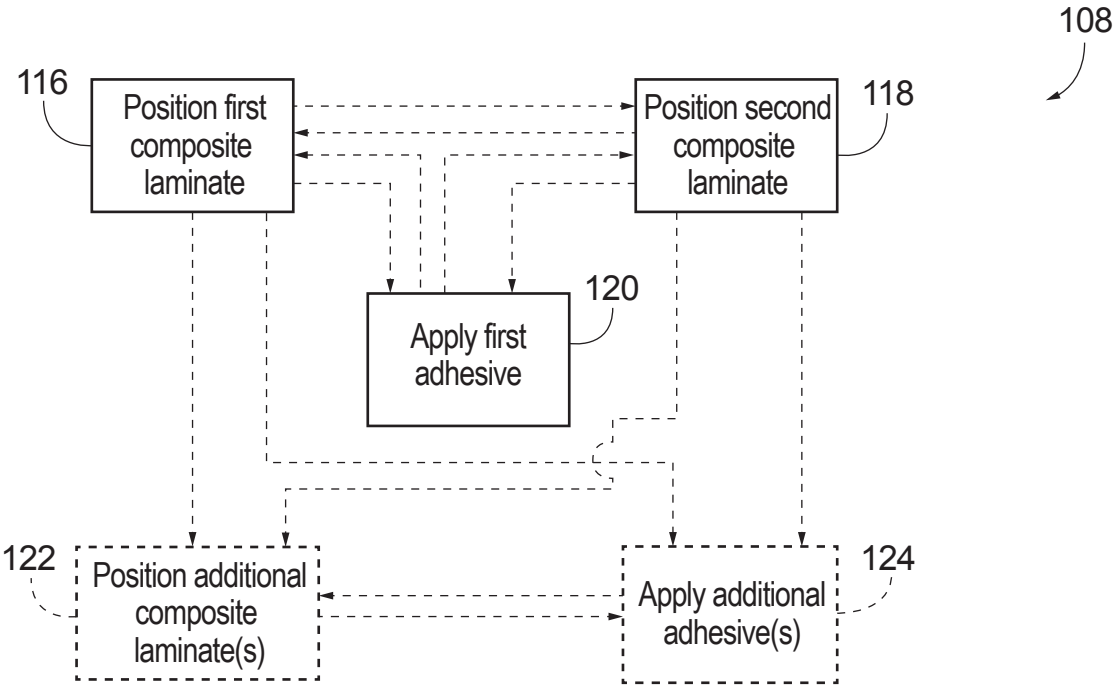
108
116
Position first composite laminate
118
Position second composite laminate
120
Apply first adhesive
122
Position additional composite laminate(s)
124
Apply additional adhesive(s)

FIG. 14