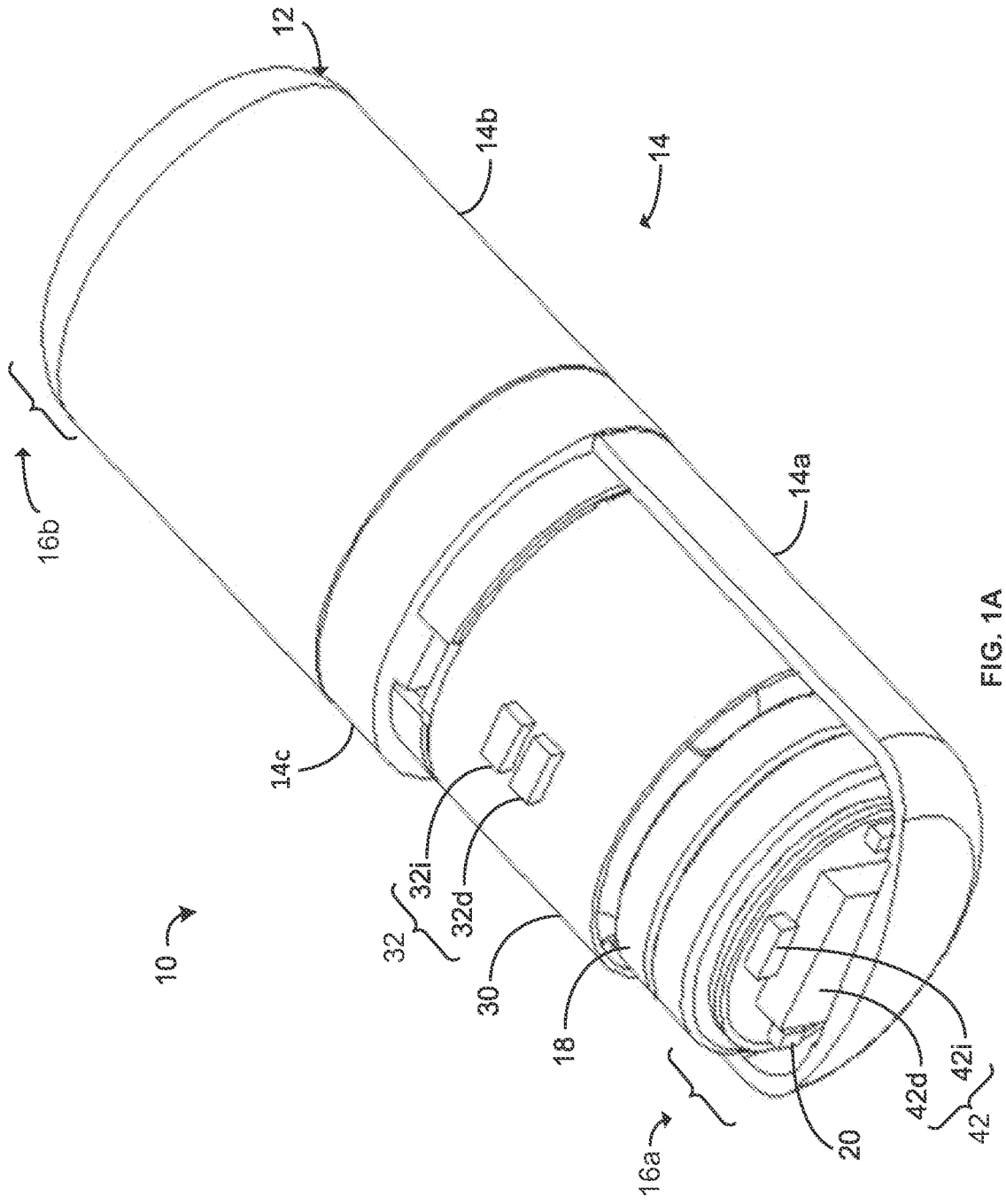

FIG. 1A

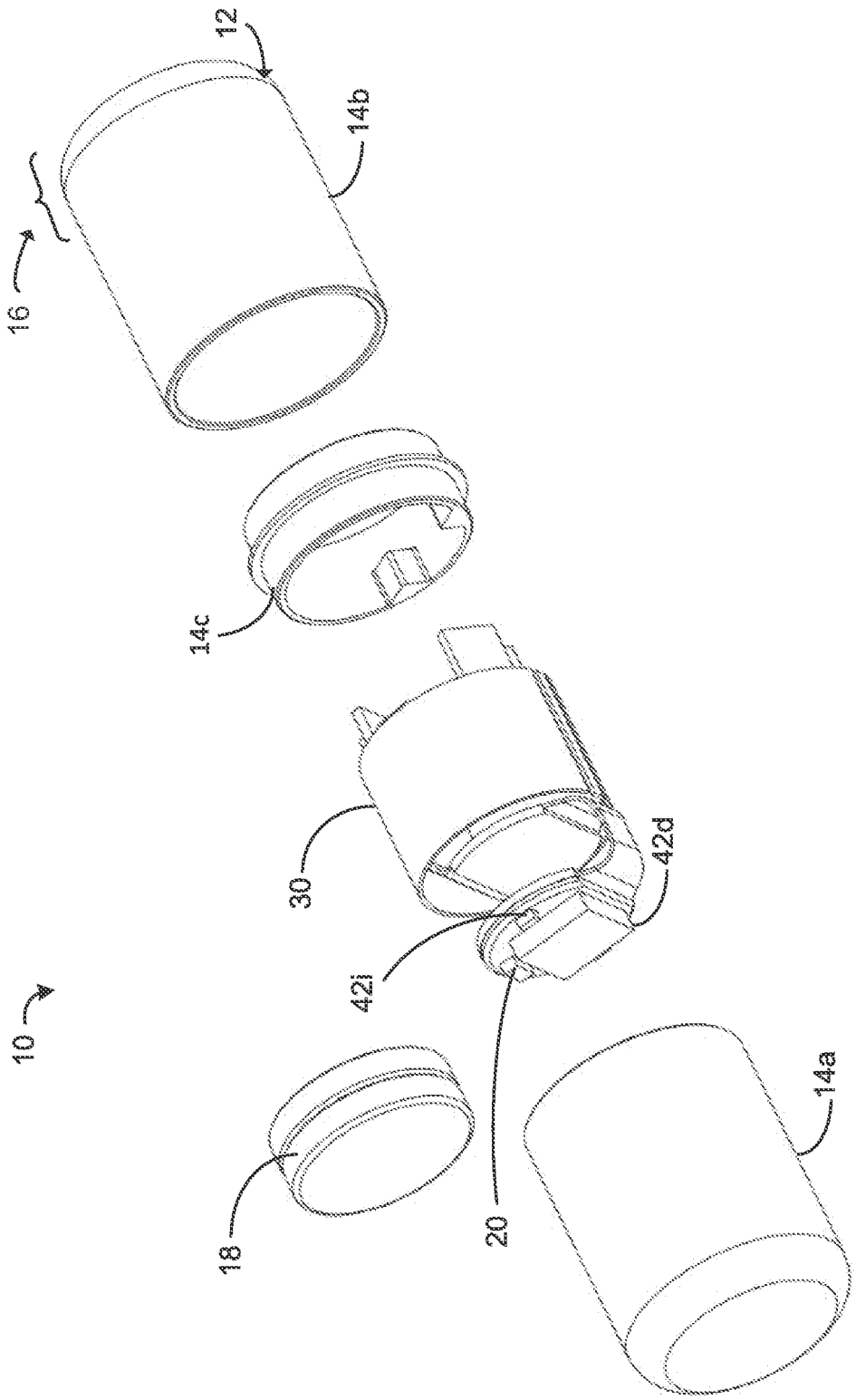

FIG. 1B

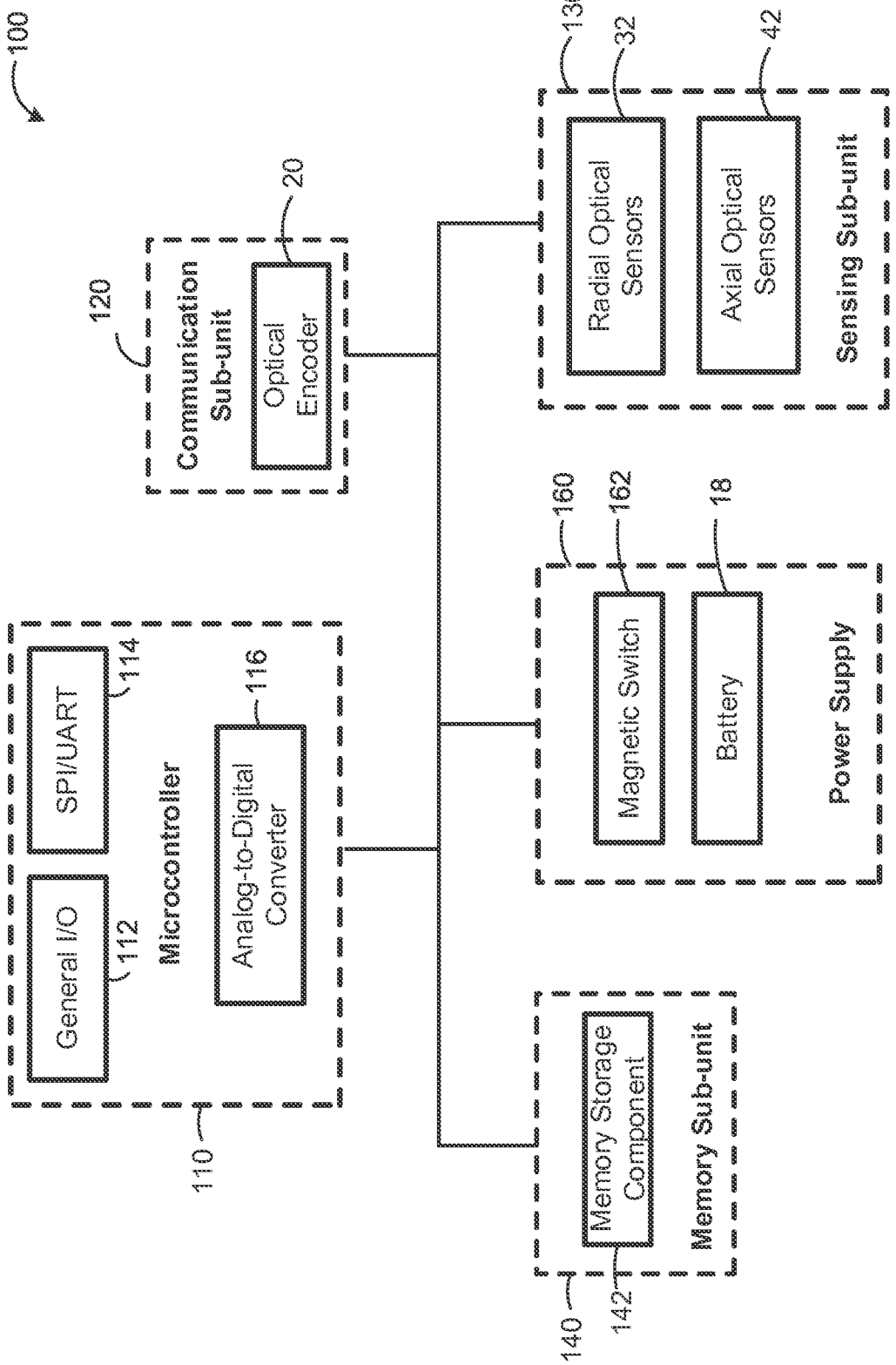
100
110
Microcontroller
General I/O
112
SPI/UART
114
Analog-to-Digital Converter
116
120
Communication Sub-unit
Optical Encoder
20
130
Sensing Sub-unit
Radial Optical Sensors
32
Axial Optical Sensors
42
160
Power Supply
Magnetic Switch
162
Battery
18
140
Memory Sub-unit
142
Memory Storage Component

FIG. 2A

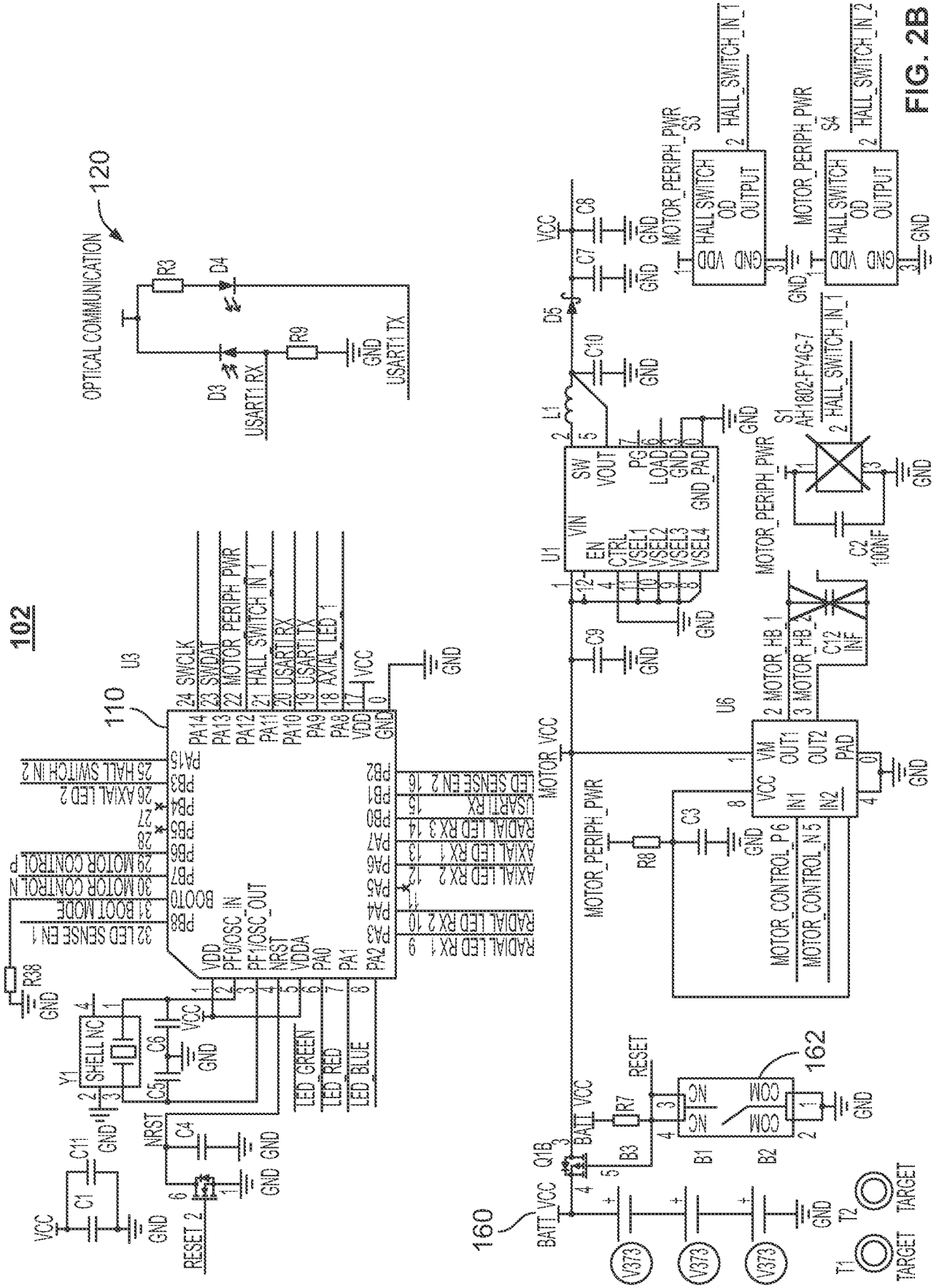
102
110
120
OPTICAL COMMUNICATION
U3
R3
D4
D3
R9
USART1_RX
USART1_TX
GND
VCC
24 SWCLK
23 SWDAT
22 MOTOR_PERIPH_PWR
21 HALL_SWITCH_IN_1
20 USART1_RX
19 USART1_TX
18 AXIAL_LED_1
17 VCC
0 GND
PA14
PA13
PA12
PA11
PA10
PA9
PA8
VDD
GND
25 HALL SWITCH IN 2
26 AXIAL LED 2
29 MOTOR CONTROL P
30 MOTOR CONTROL N
31 BOOT MODE
32 LED SENSE EN 1
R38
Z7
Z8
BOOT0
VDD
PF0/OSC_IN
PF1/OSC_OUT
NRST
VDDA
PA0
PA1
PA2
LED SENSE EN 2 16
USART1 RX 15
RADIAL LED RX 3 14
AXIAL LED RX 1 13
AXIAL LED RX 2 12
RADIAL LED RX 2 11
RADIAL LED RX 1 9
Y1
SHELL NC
C6
C5
C4
C11
C1
RESET 2
LED GREEN
LED RED
LED BLUE
MOTOR_VCC
U1
VIN
EN
CTRL
VSEL1
VSEL2
VSEL3
VSEL4
SW
VOUT
PGD
LOAD
GND
GND_PAD
L1
C10
C9
C8
C7
D5
MOTOR_PERIPH_PWR
S3
S4
HALL SWITCH
OD
OUTPUT
HALL_SWITCH_IN_1
HALL_SWITCH_IN_2
S1
AH1802-FY4G-7
C2
100NF
U6
VCC
VM
OUT1
OUT2
PAD
IN1
IN2
2 MOTOR HB 1
3 MOTOR HB 2
C12
1NF
R8
C3
MOTOR_CONTROL_P 6
MOTOR_CONTROL_N 5
160
BATT_VCC
Q1B
R7
RESET
162
NC
COM
B1
B2
B3
V373
T1
T2
TARGET

FIG. 2B

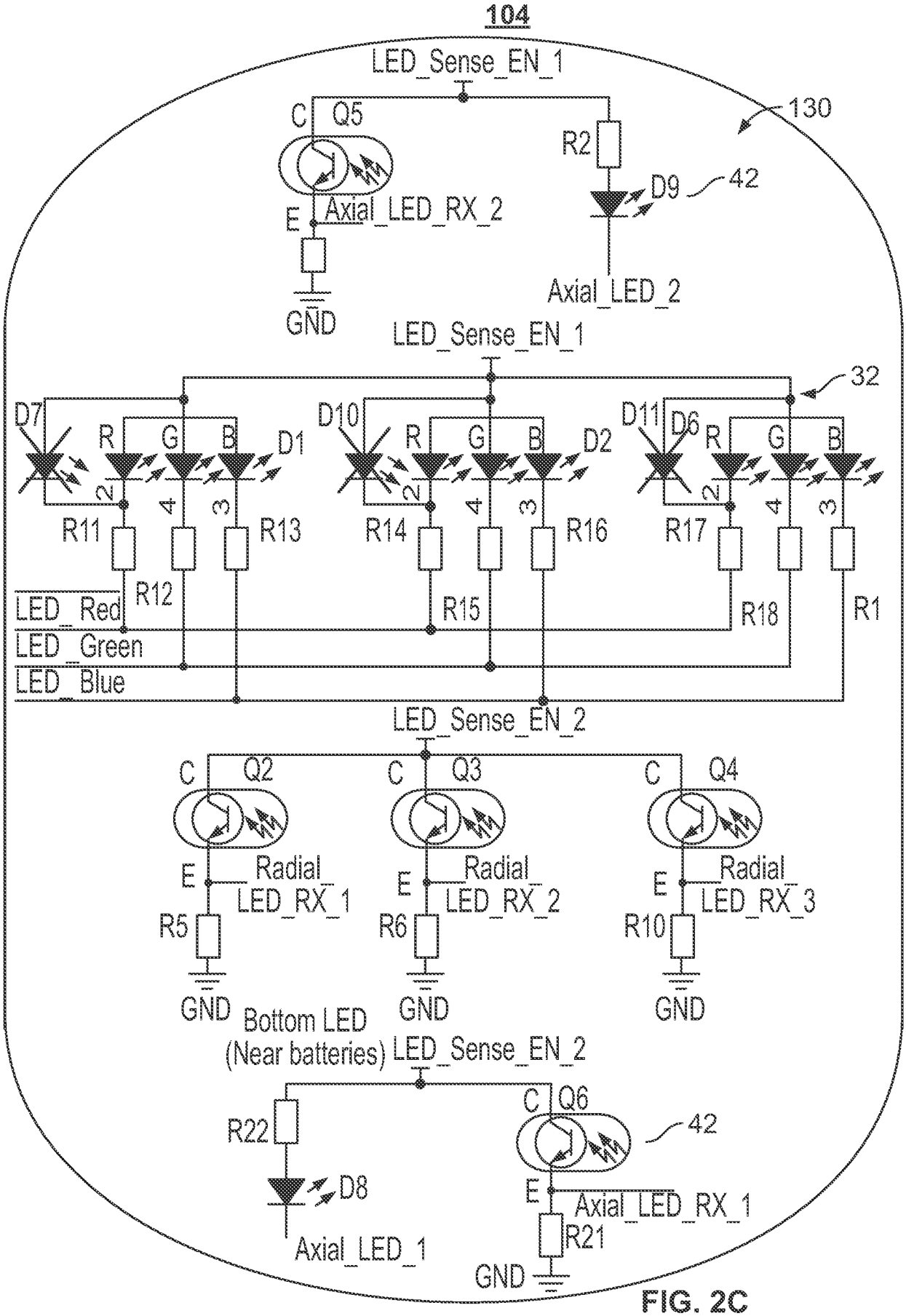
104
LED_Sense_EN_1
130
C
Q5
R2
D9
42
E
Axial_LED_RX_2
GND
Axial_LED_2
LED_Sense_EN_1
32
D7
R
G
B
D1
D10
D2
D11
D6
2
4
3
R11
R13
R14
R16
R17
R12
R15
R18
R1
LED_Red
LED_Green
LED_Blue
LED_Sense_EN_2
C
Q2
Q3
Q4
E
Radial_LED_RX_1
Radial_LED_RX_2
Radial_LED_RX_3
R5
R6
R10
GND
Bottom LED
(Near batteries)
LED_Sense_EN_2
R22
C
Q6
42
D8
E
Axial_LED_RX_1
R21
Axial_LED_1
GND

FIG. 2C

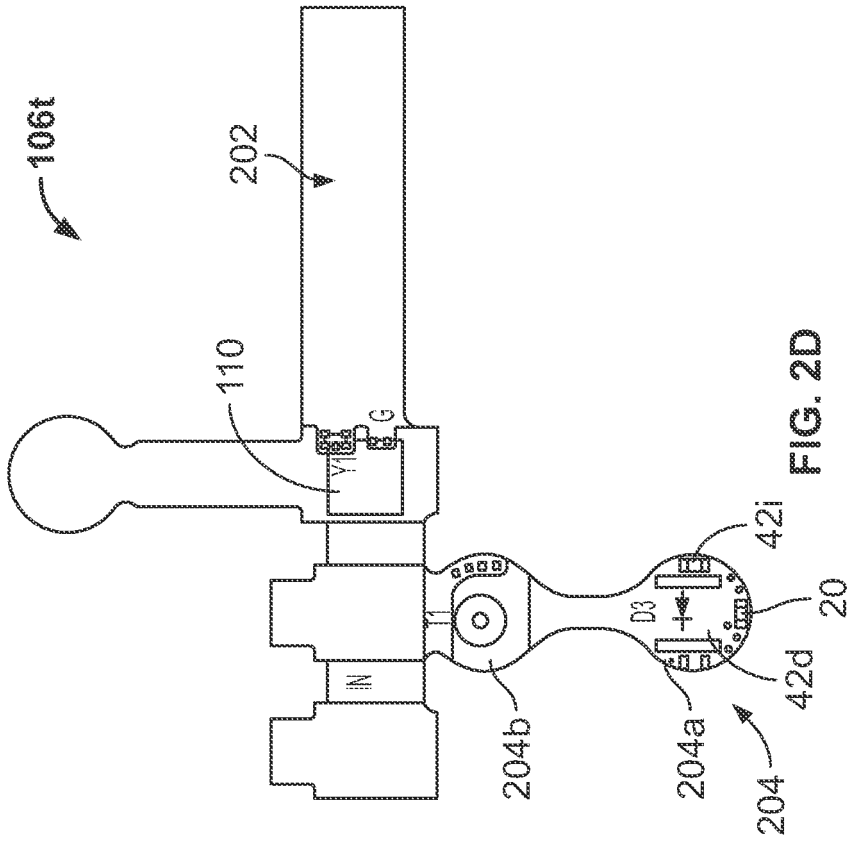
106t
202
110
Y1
G
IN
T1
D3
42i
20
42d
204b
204a
204

FIG. 2D

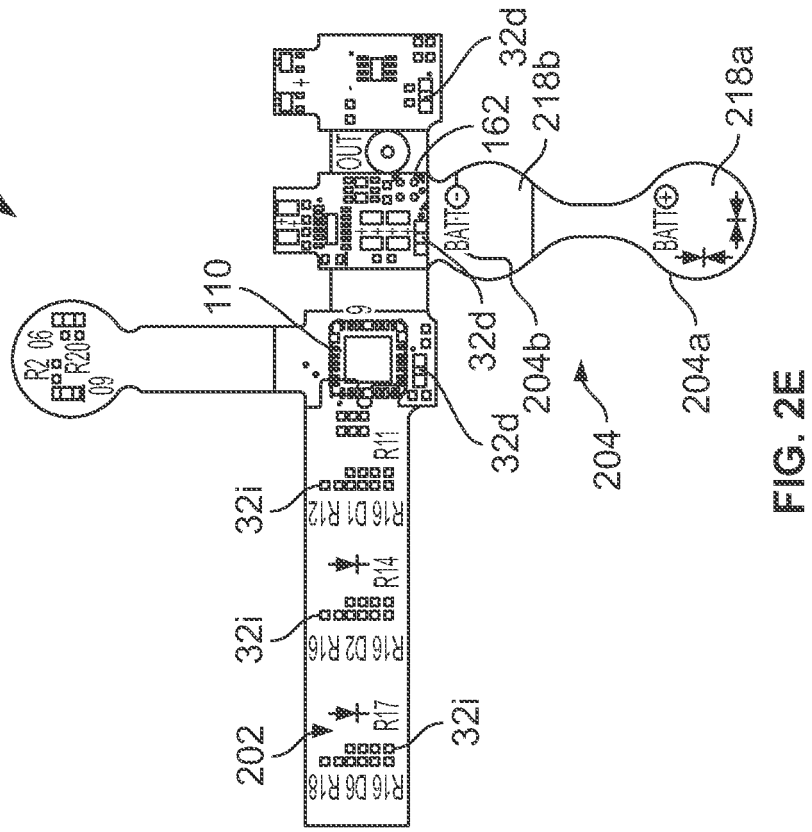
106b
110
R2 06
R20
09
9
32d
162
218b
218a
OUT
BATT
BATT
32d
204b
204a
204
32d
R11
R16 D1 R12
R14
R16 D2 R16
R17
R16 D6 R18
32i
32i
32i
202

FIG. 2E

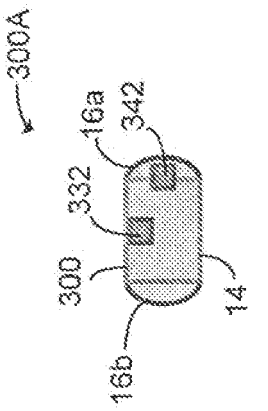

FIG. 3A

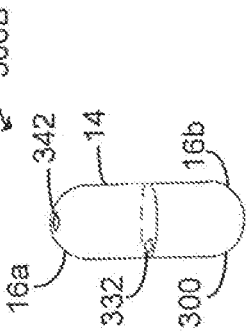

FIG. 3B

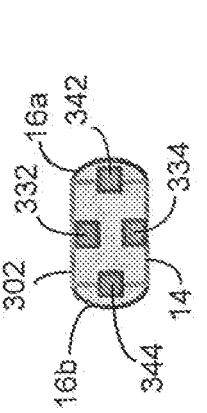

FIG. 4A

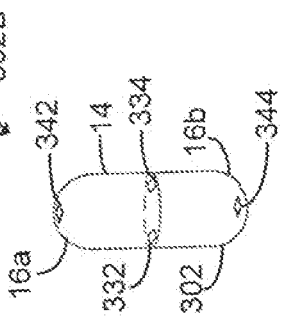

FIG. 4B

FIG. 5A

FIG. 5B

FIG. 6A

FIG. 6B

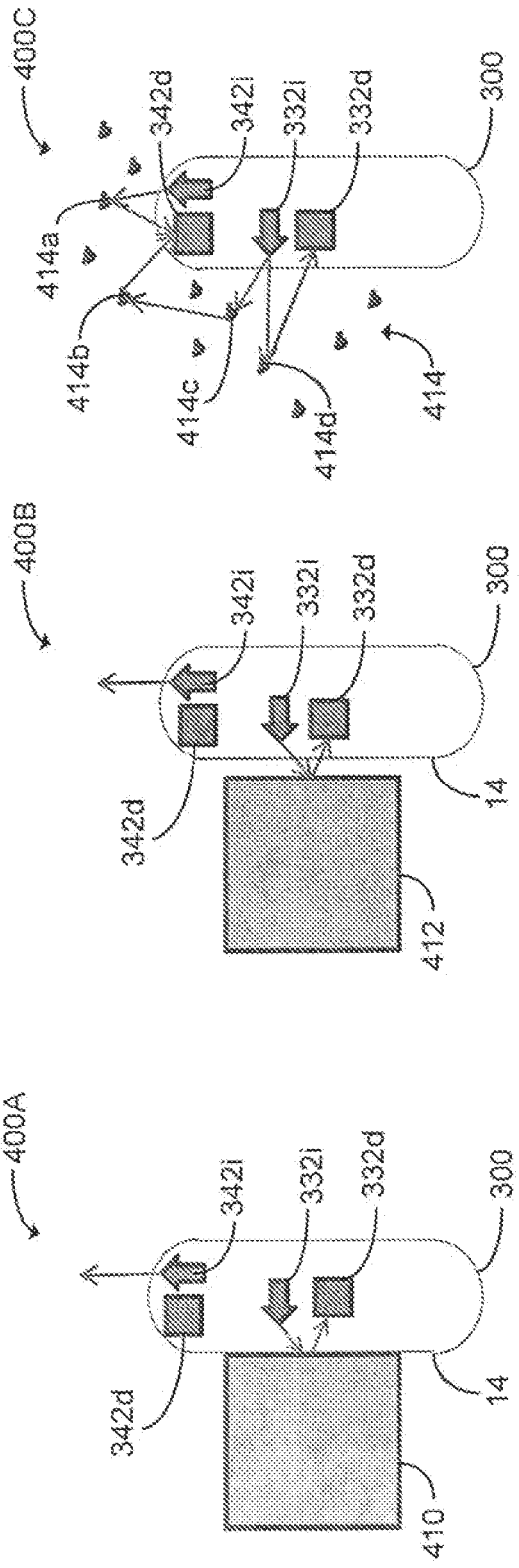

FIG. 7A

FIG. 7B

FIG. 7C

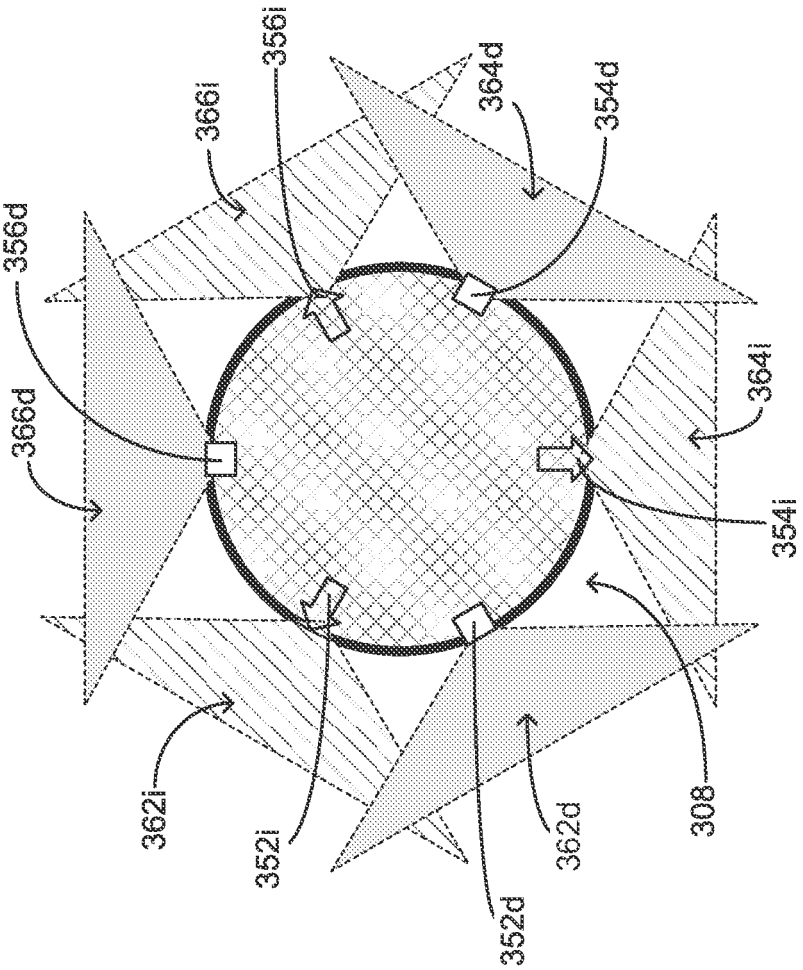
356i
366i
364d
354d
356d
366d
364i
354i
362i
352i
352d
362d
308

FIG. 8A

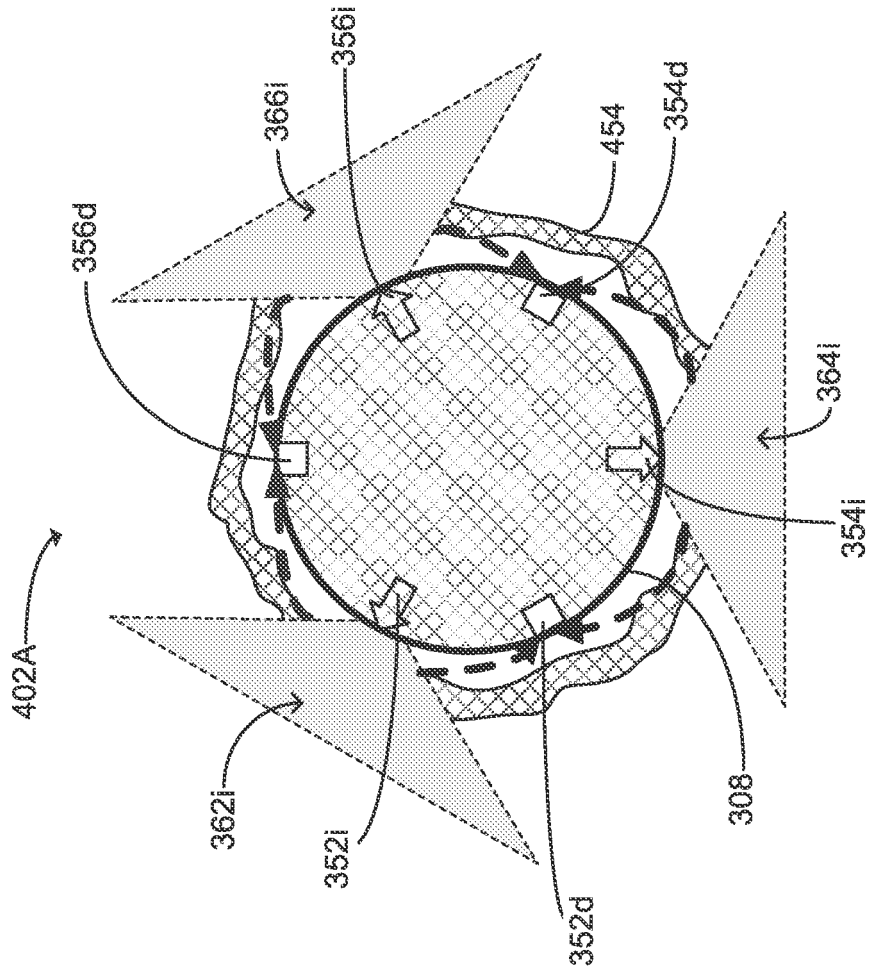

FIG. 8B

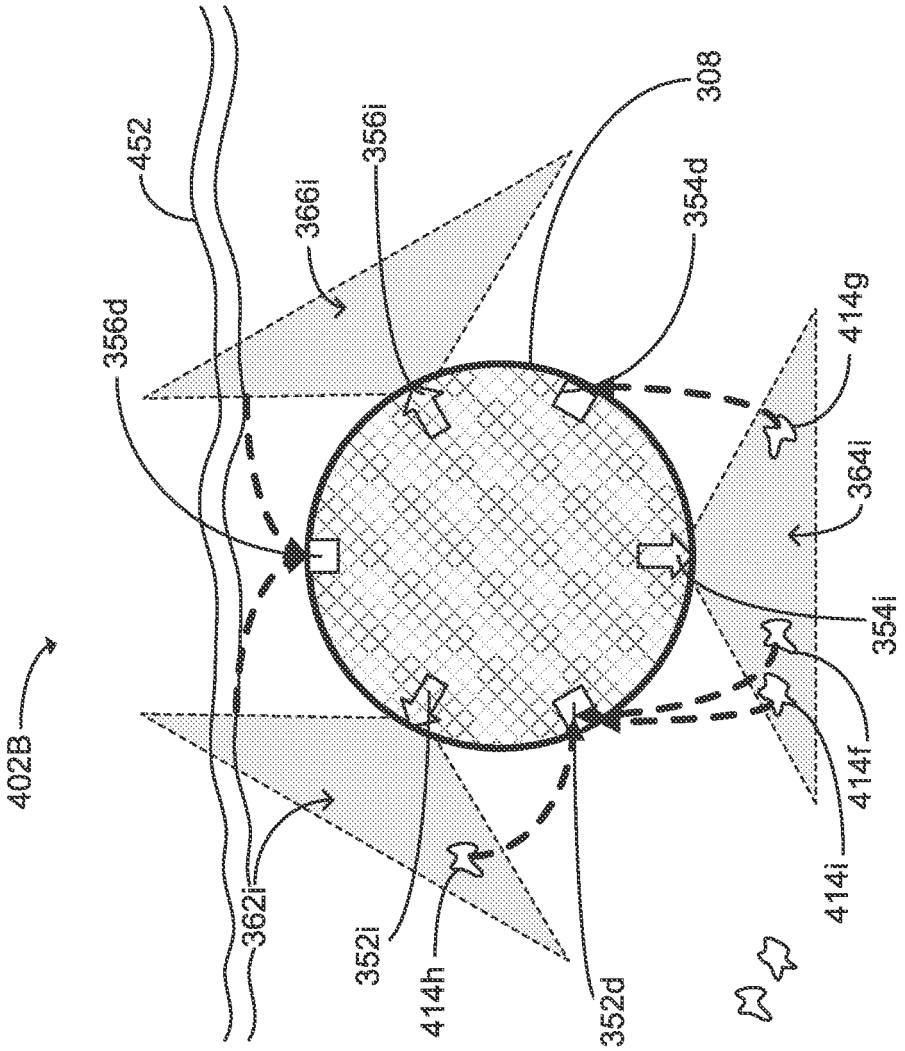
402B
452
366i
356i
308
354d
356d
414g
364i
354i
414f
414i
362i
352i
414h
352d

FIG. 8C

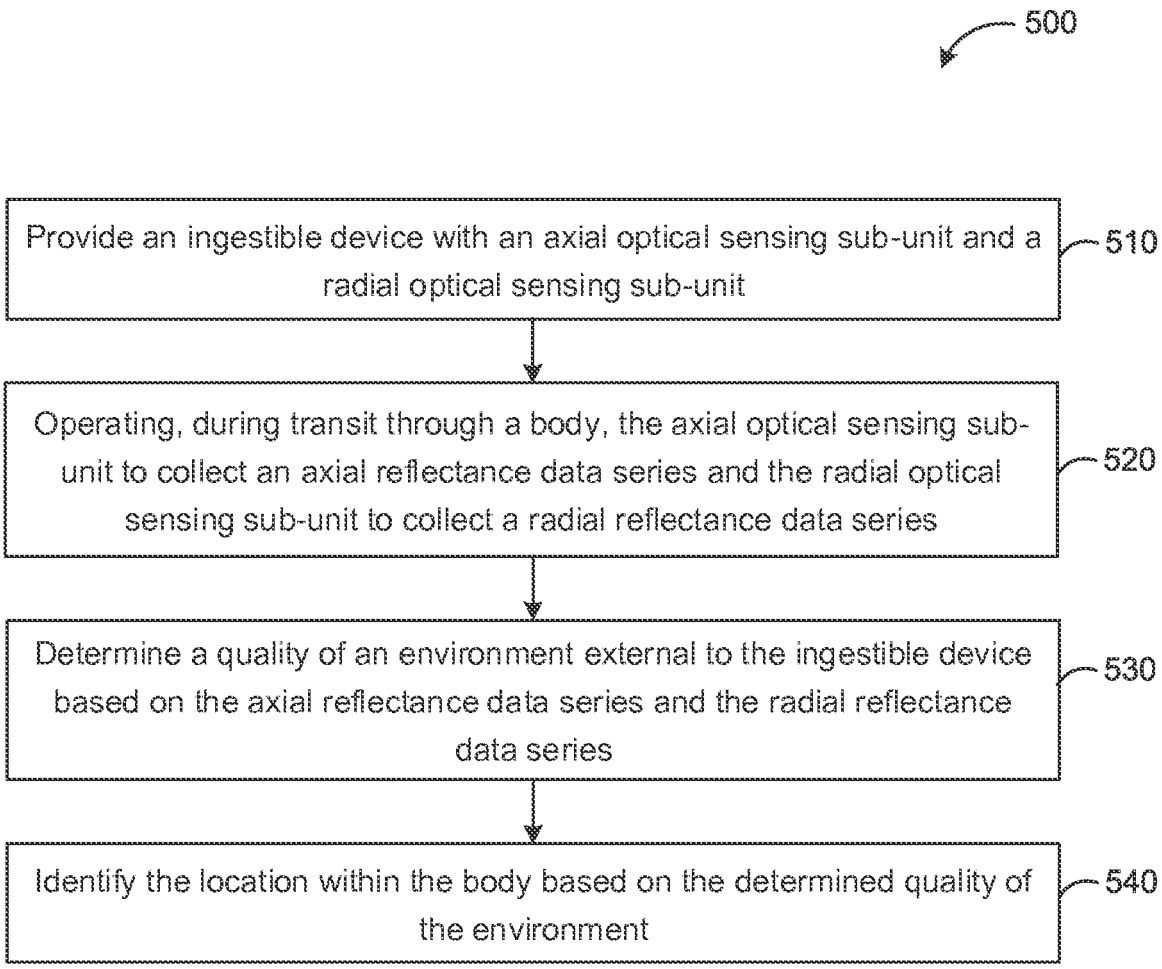
500
Provide an ingestible device with an axial optical sensing sub-unit and a radial optical sensing sub-unit
510
Operating, during transit through a body, the axial optical sensing sub-unit to collect an axial reflectance data series and the radial optical sensing sub-unit to collect a radial reflectance data series
520
Determine a quality of an environment external to the ingestible device based on the axial reflectance data series and the radial reflectance data series
530
Identify the location within the body based on the determined quality of the environment
540

FIG. 9A

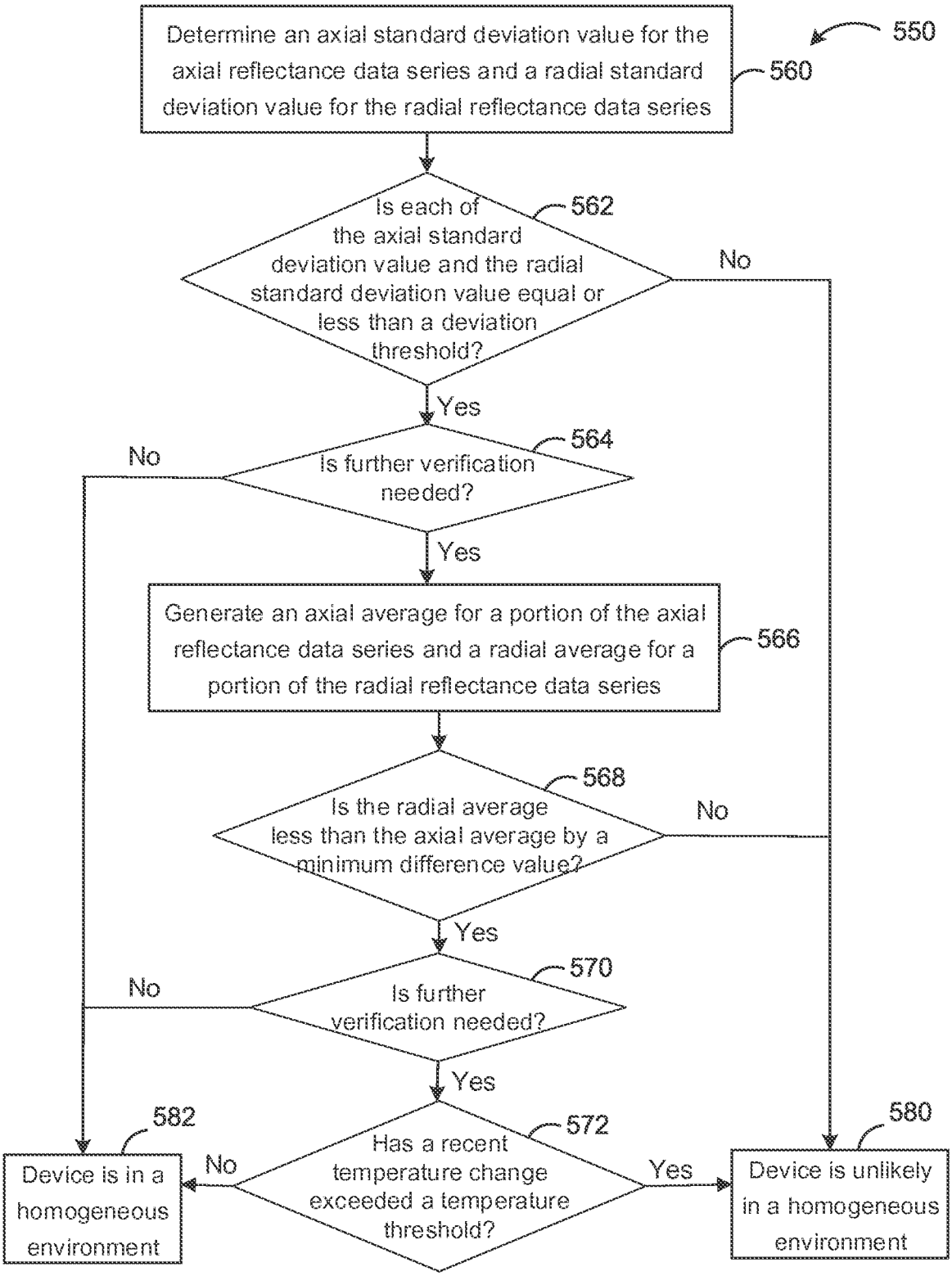
Determine an axial standard deviation value for the axial reflectance data series and a radial standard deviation value for the radial reflectance data series
550
560
Is each of the axial standard deviation value and the radial standard deviation value equal or less than a deviation threshold?
562
No
Yes
Is further verification needed?
564
No
Yes
Generate an axial average for a portion of the axial reflectance data series and a radial average for a portion of the radial reflectance data series
566
Is the radial average less than the axial average by a minimum difference value?
568
No
Yes
Is further verification needed?
570
No
Yes
Has a recent temperature change exceeded a temperature threshold?
572
No
Yes
Device is in a homogeneous environment
582
Device is unlikely in a homogeneous environment
580

FIG. 9B

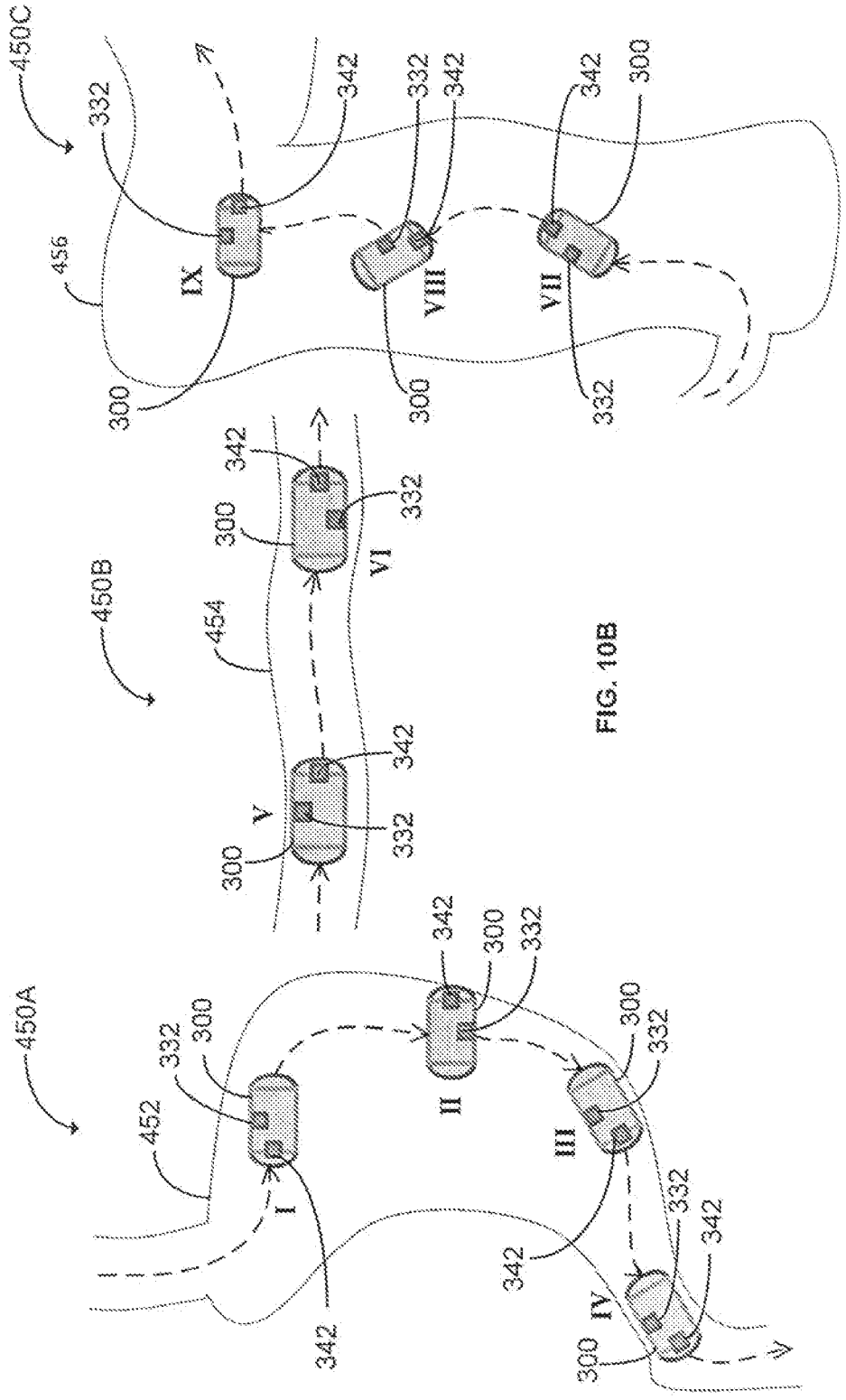

FIG. 10A

FIG. 10B

FIG. 10C

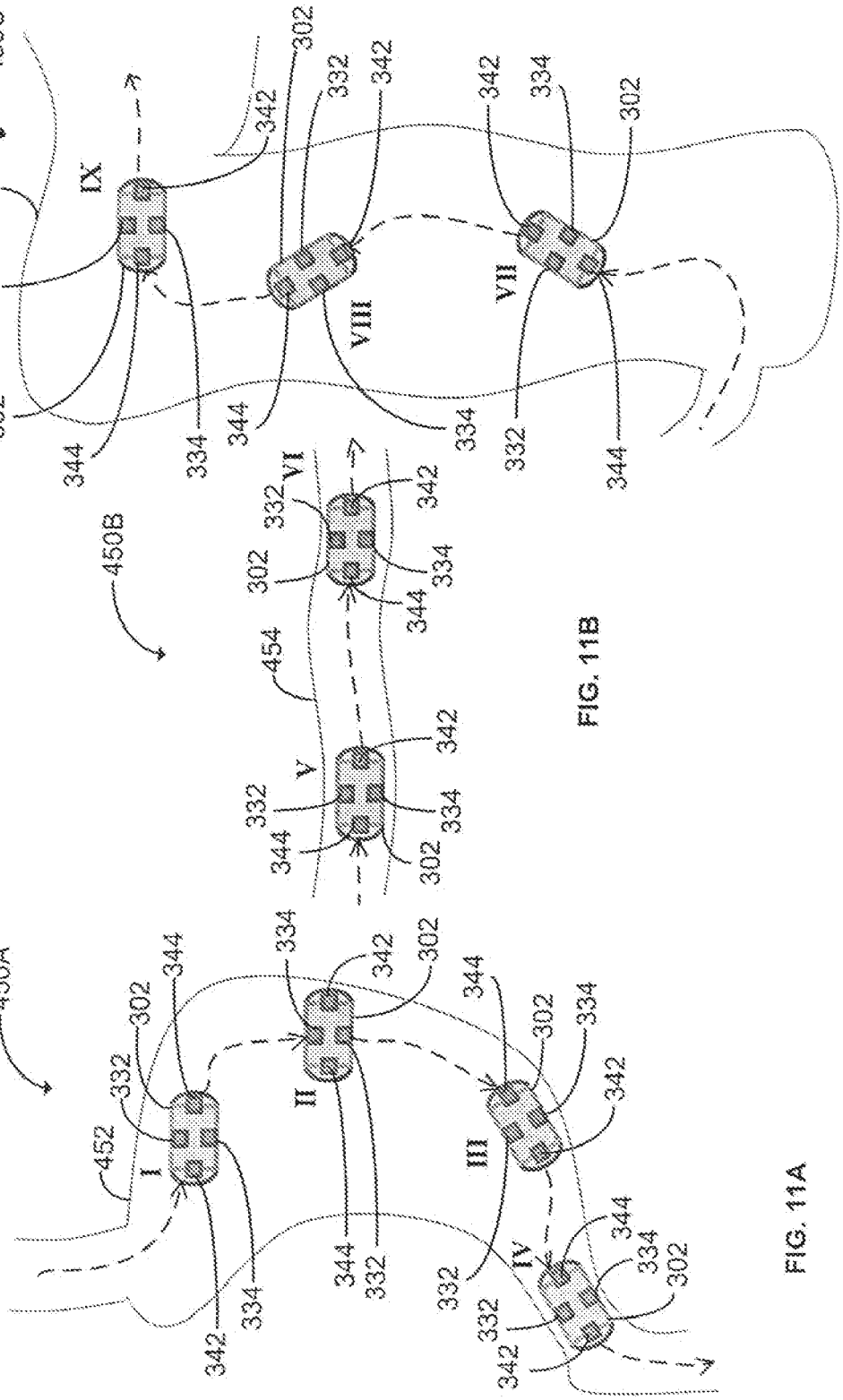

FIG. 11A

FIG. 11B

FIG. 11C

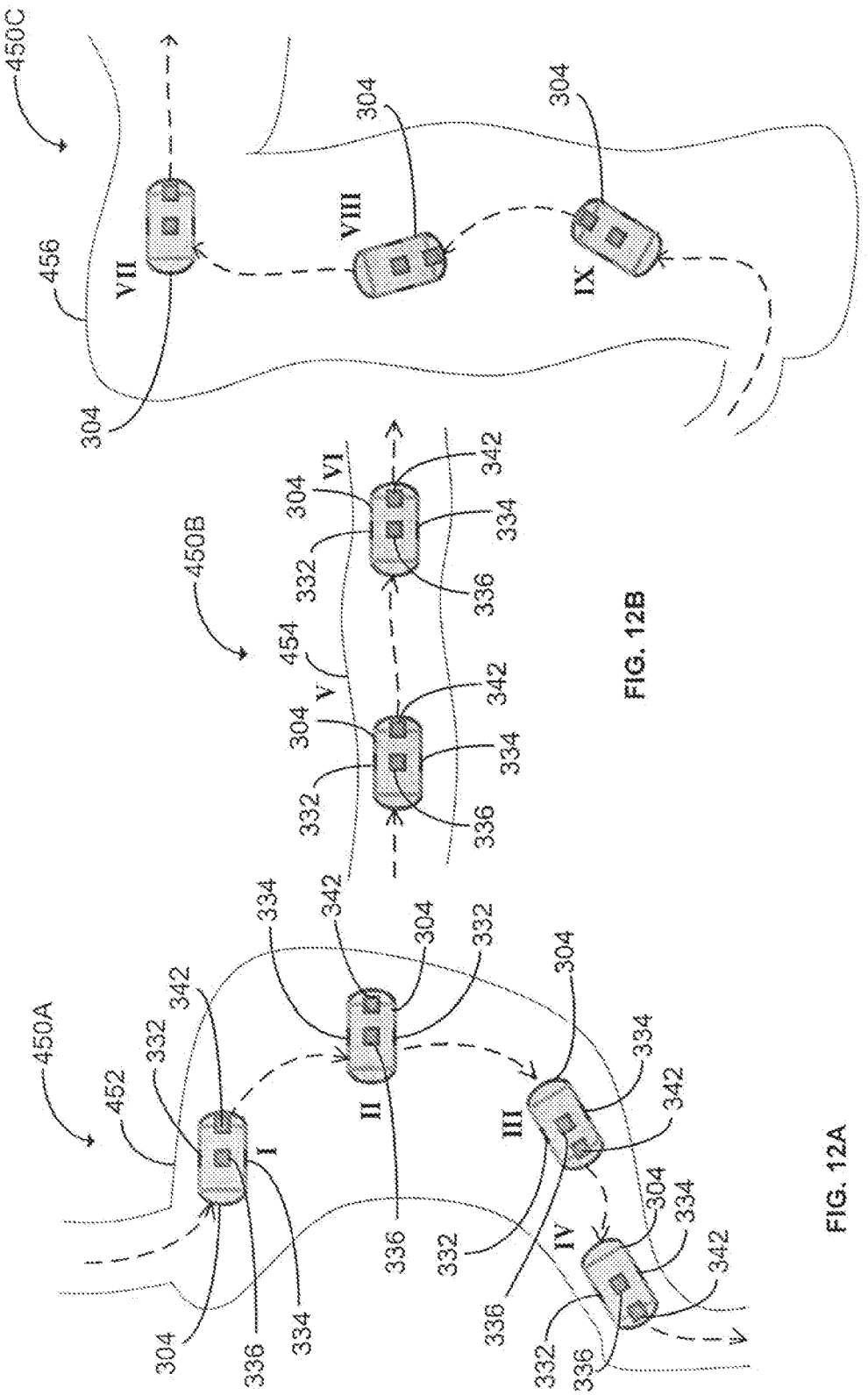

FIG. 12A

FIG. 12B

FIG. 12C

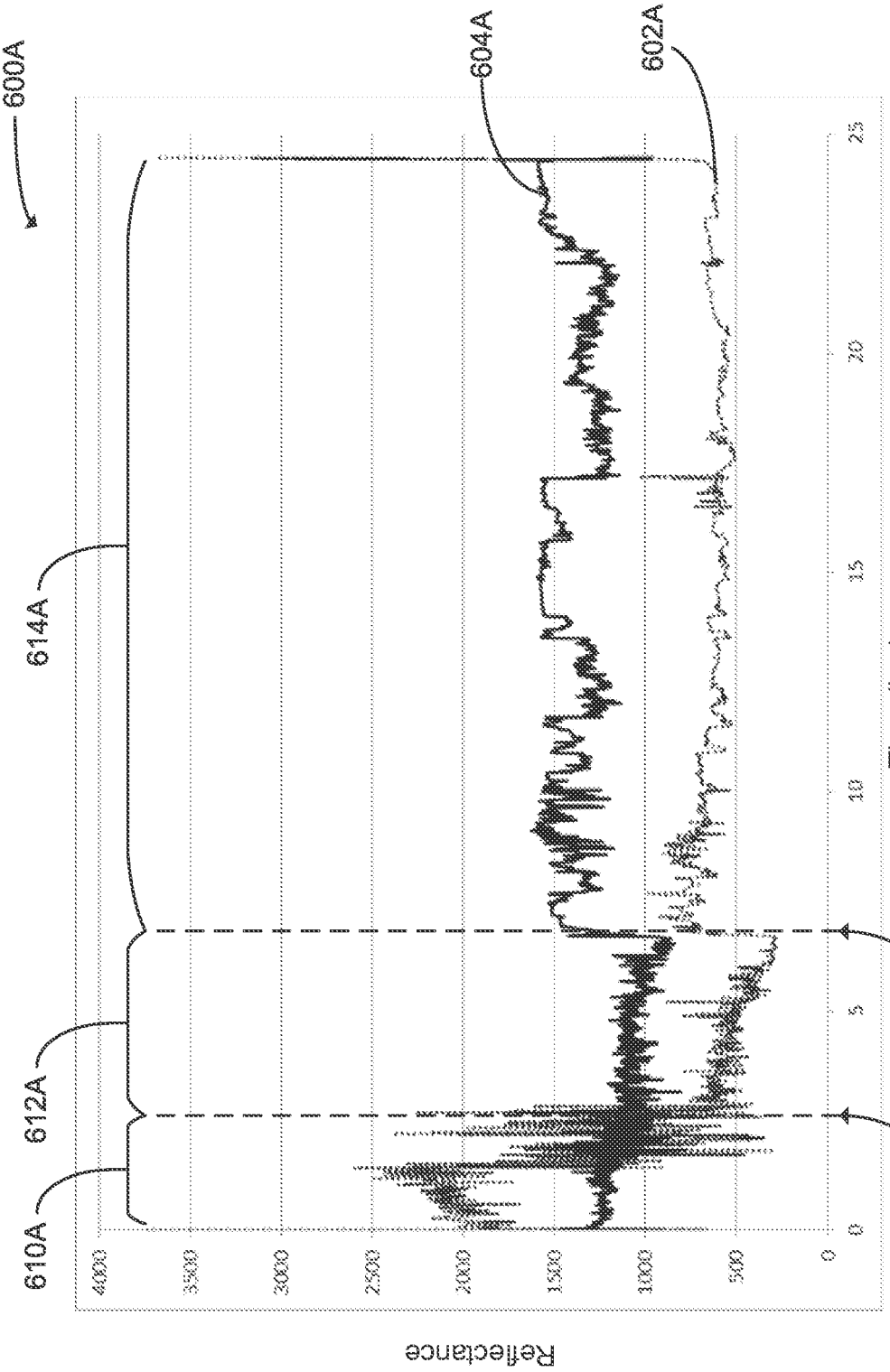
600A
604A
602A
614A
612A
610A
620A
622A
Reflectance
Time (hrs)
4000
3500
3000
2500
2000
1500
1000
500
0
0
5
10
15
20
25

FIG. 13A

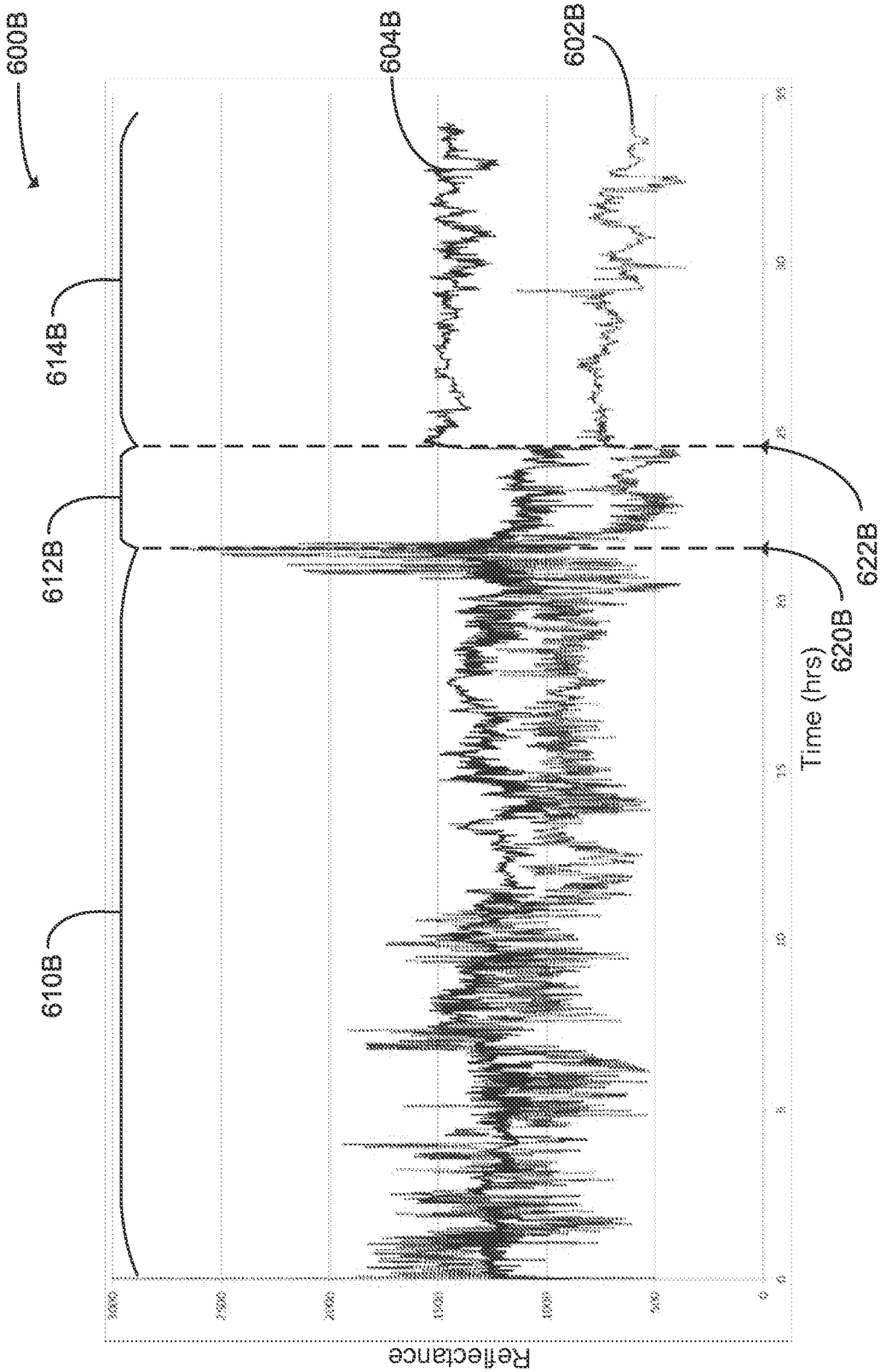
600B
604B
602B
614B
612B
610B
622B
620B
Time (hrs)
Reflectance

FIG. 13B

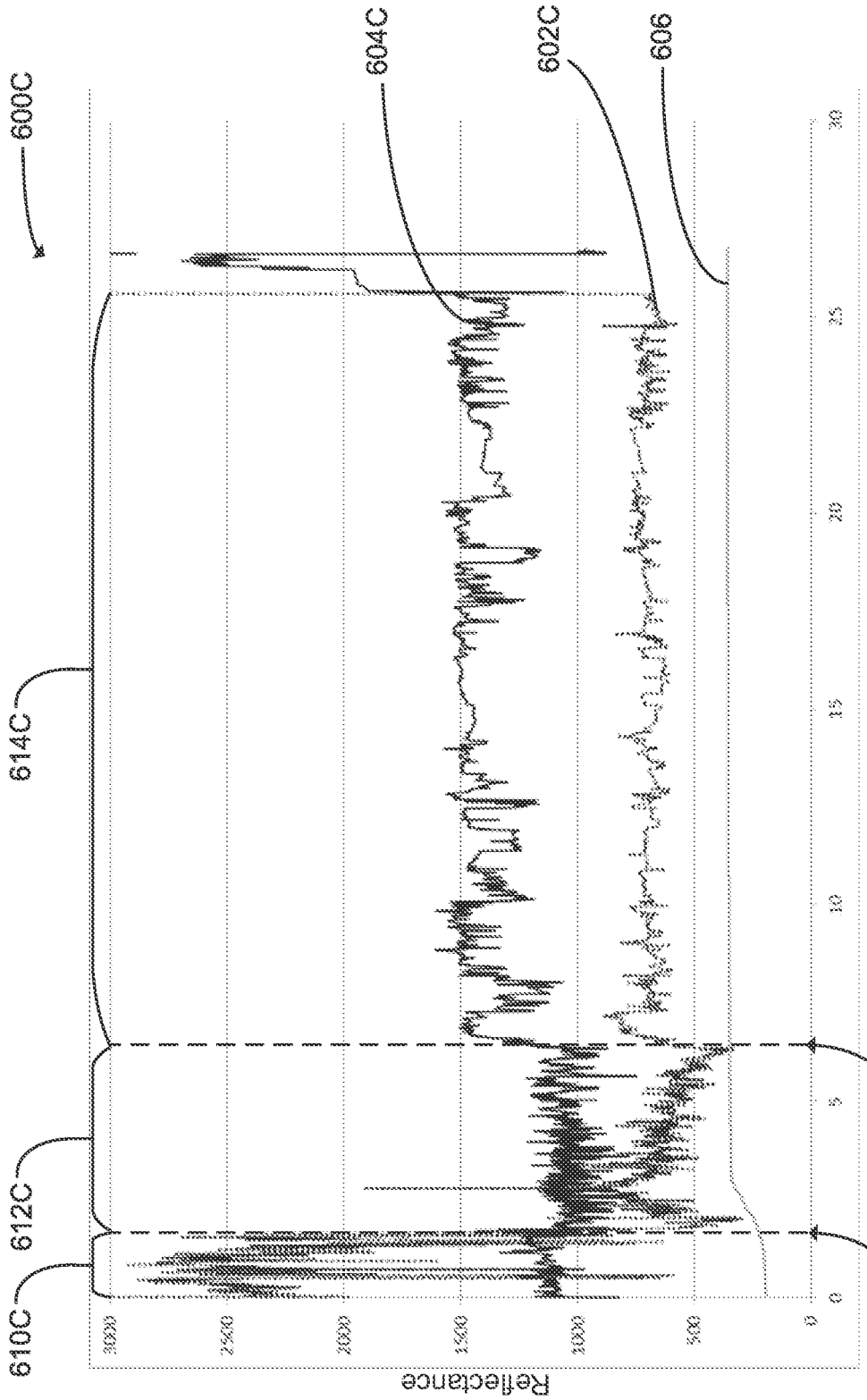
600C
604C
602C
606
614C
612C
610C
622C
620C
Reflectance
Time (hrs)
3000
2500
2000
1500
1000
500
0
0
5
10
15
20
25
30

FIG. 13C

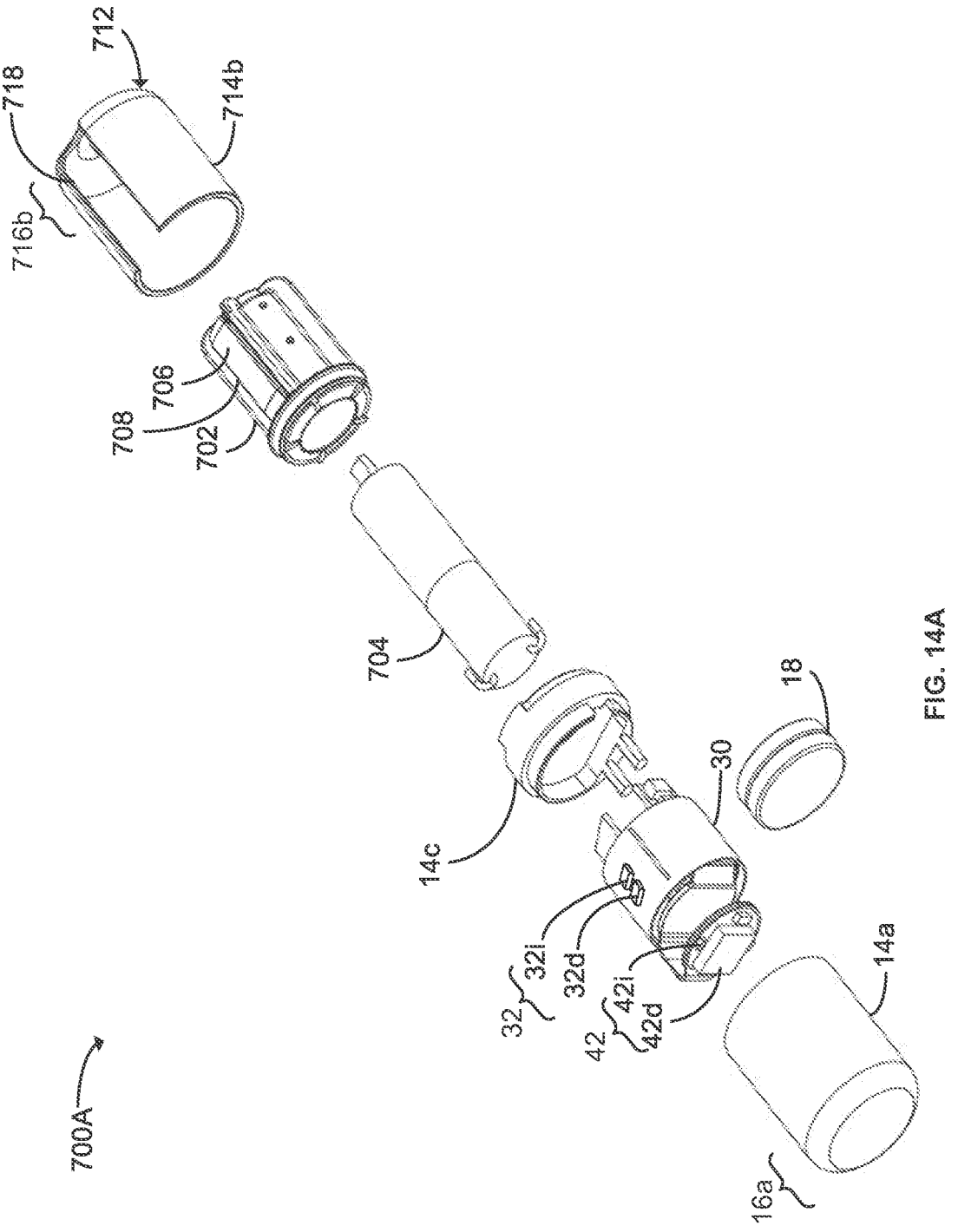
700A
718
712
716b
714b
708
706
702
704
14c
18
30
32
32i
32d
42
42i
42d
14a
16a

FIG. 14A

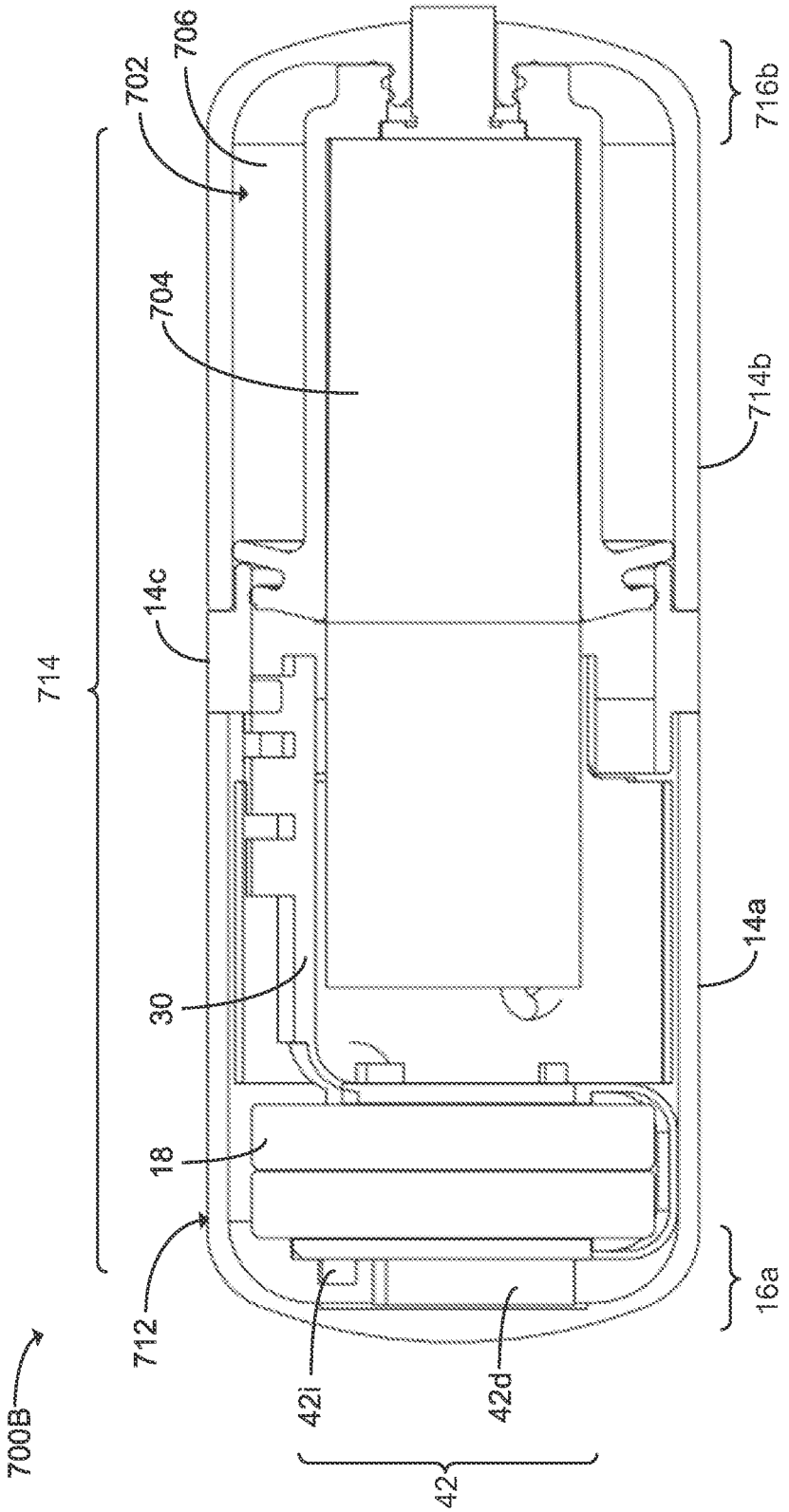

FIG. 14B

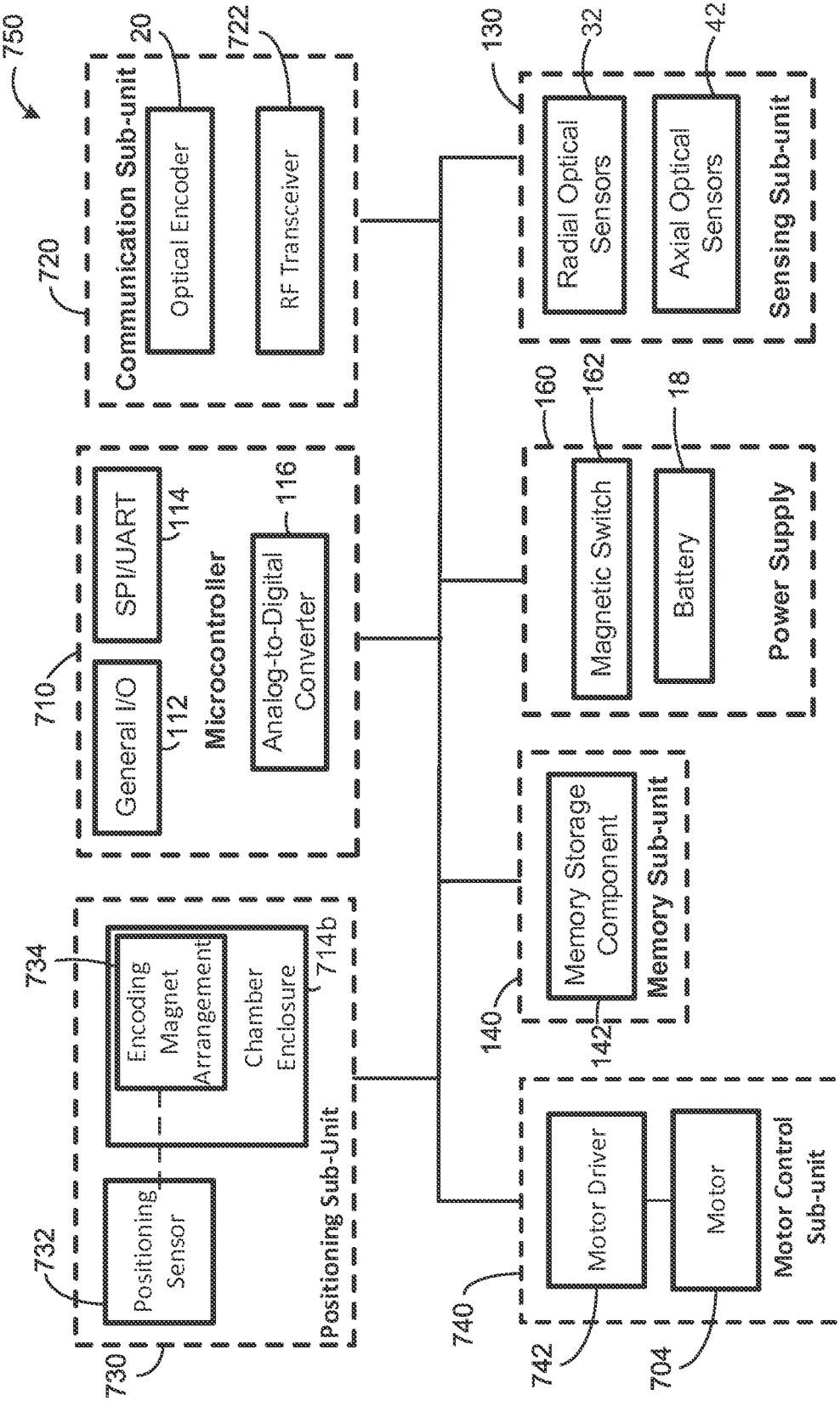
750
720
Communication Sub-unit
20
Optical Encoder
722
RF Transceiver
710
General I/O
112
SPI/UART
114
Microcontroller
Analog-to-Digital Converter
116
130
Radial Optical Sensors
32
Axial Optical Sensors
42
Sensing Sub-unit
160
162
Magnetic Switch
18
Battery
Power Supply
734
Encoding Magnet Arrangement
Chamber Enclosure
714b
732
Positioning Sensor
730
Positioning Sub-Unit
140
142
Memory Storage Component
Memory Sub-unit
740
742
Motor Driver
704
Motor
Motor Control Sub-unit

FIG. 15

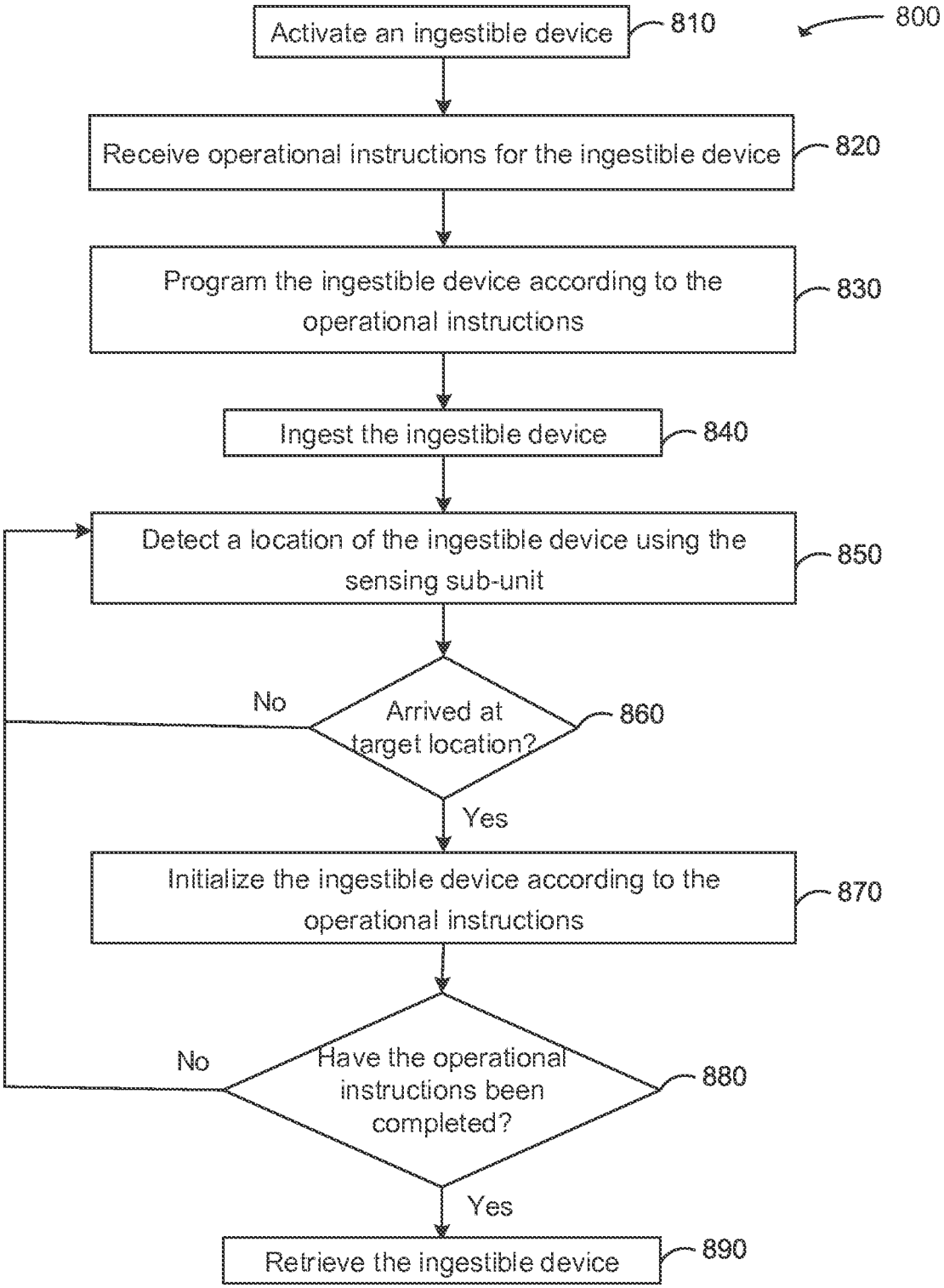
800
Activate an ingestible device
810
Receive operational instructions for the ingestible device
820
Program the ingestible device according to the operational instructions
830
Ingest the ingestible device
840
Detect a location of the ingestible device using the sensing sub-unit
850
Arrived at target location?
860
No
Yes
Initialize the ingestible device according to the operational instructions
870
Have the operational instructions been completed?
880
No
Yes
Retrieve the ingestible device
890

FIG. 16

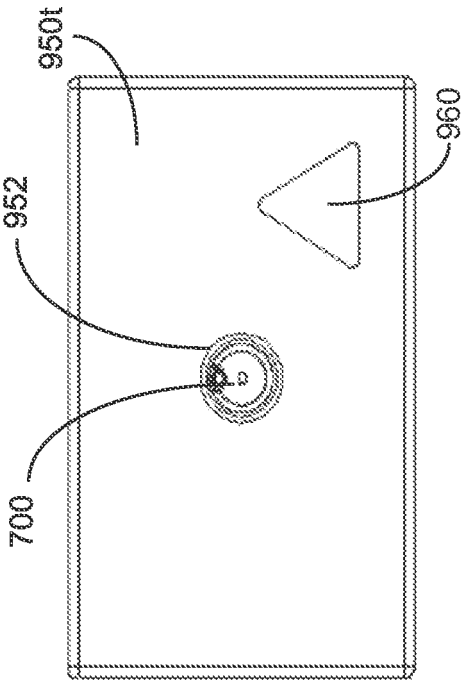

FIG. 17B

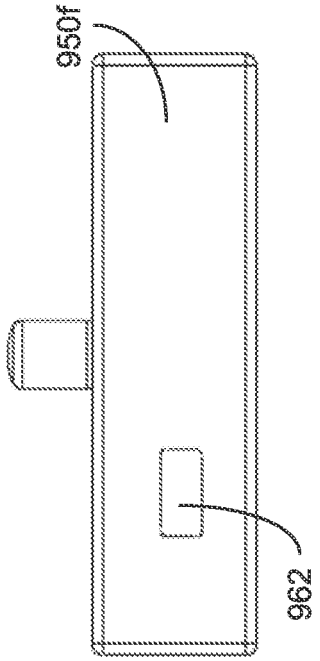

FIG. 17C

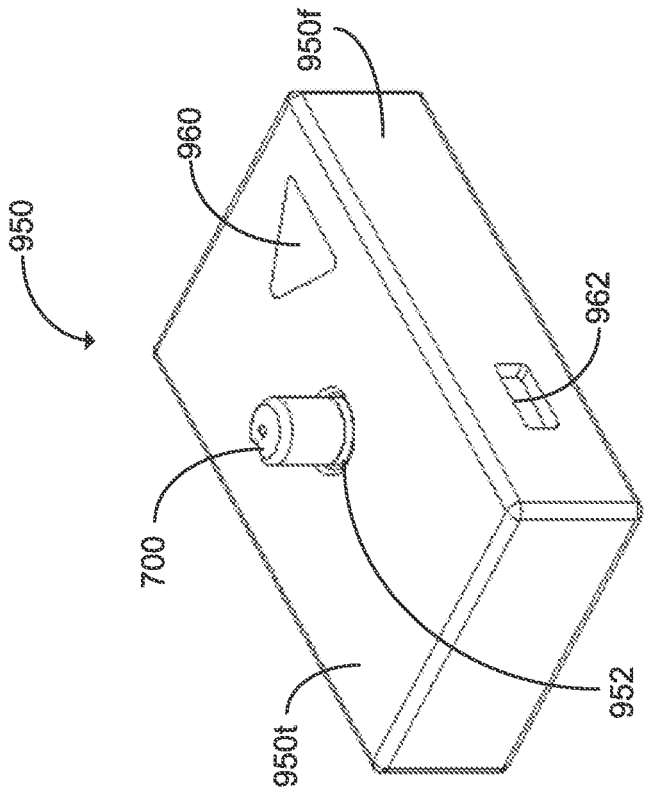

FIG. 17A

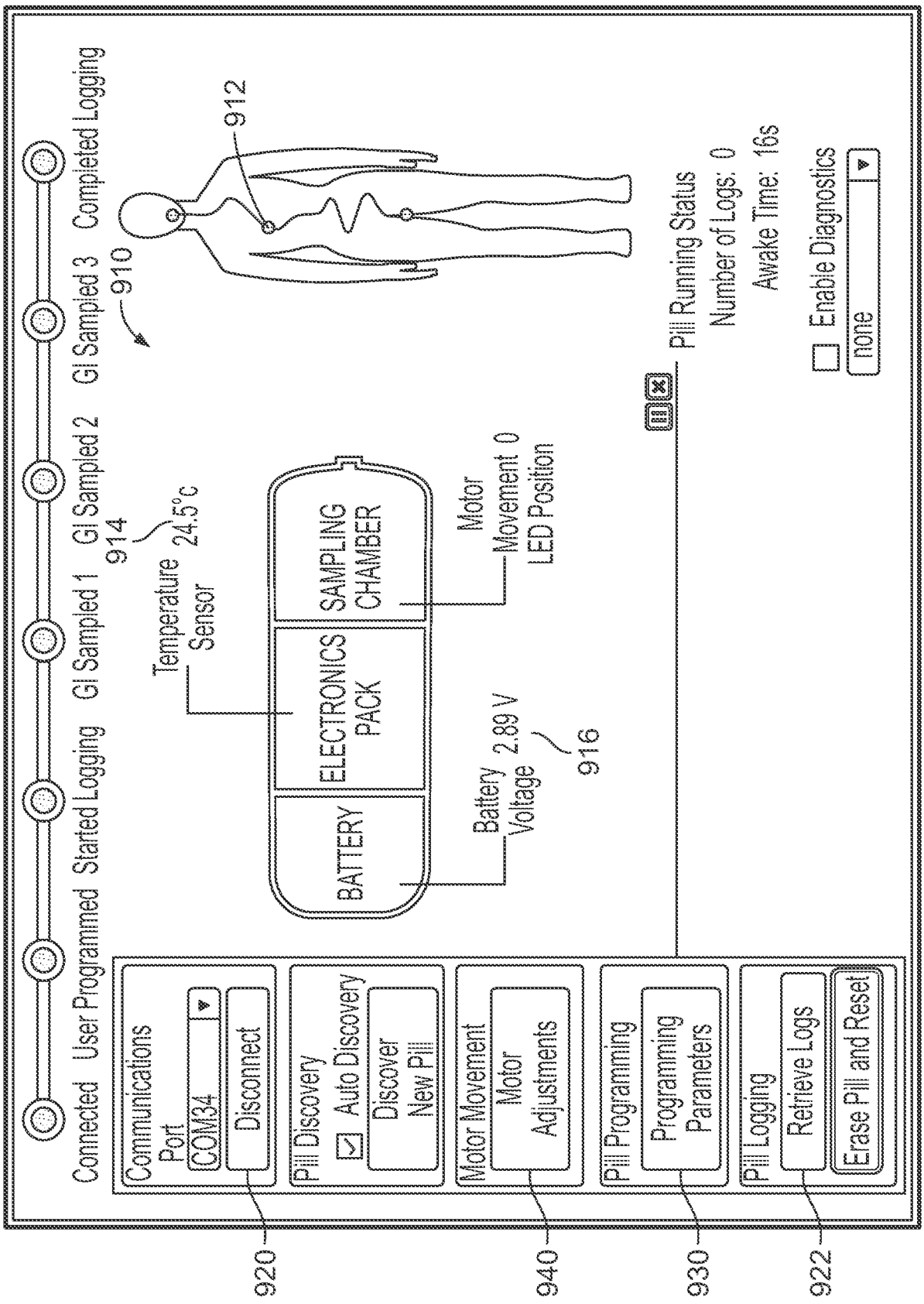
900
Connected
User Programmed
Started Logging
GI Sampled 1
GI Sampled 2
GI Sampled 3
Completed Logging
910
912
914
Temperature Sensor
24.5°c
BATTERY
ELECTRONICS PACK
SAMPLING CHAMBER
Motor Movement 0
LED Position
Battery Voltage
2.89 V
916
Pill Running Status
Number of Logs: 0
Awake Time: 16s
Enable Diagnostics
none
Communications Port
COM34
Disconnect
Pill Discovery
Auto Discovery
Discover New Pill
Motor Movement
Motor Adjustments
Pill Programming
Programming Parameters
Pill Logging
Retrieve Logs
Erase Pill and Reset
920
940
930
922

FIG. 18A

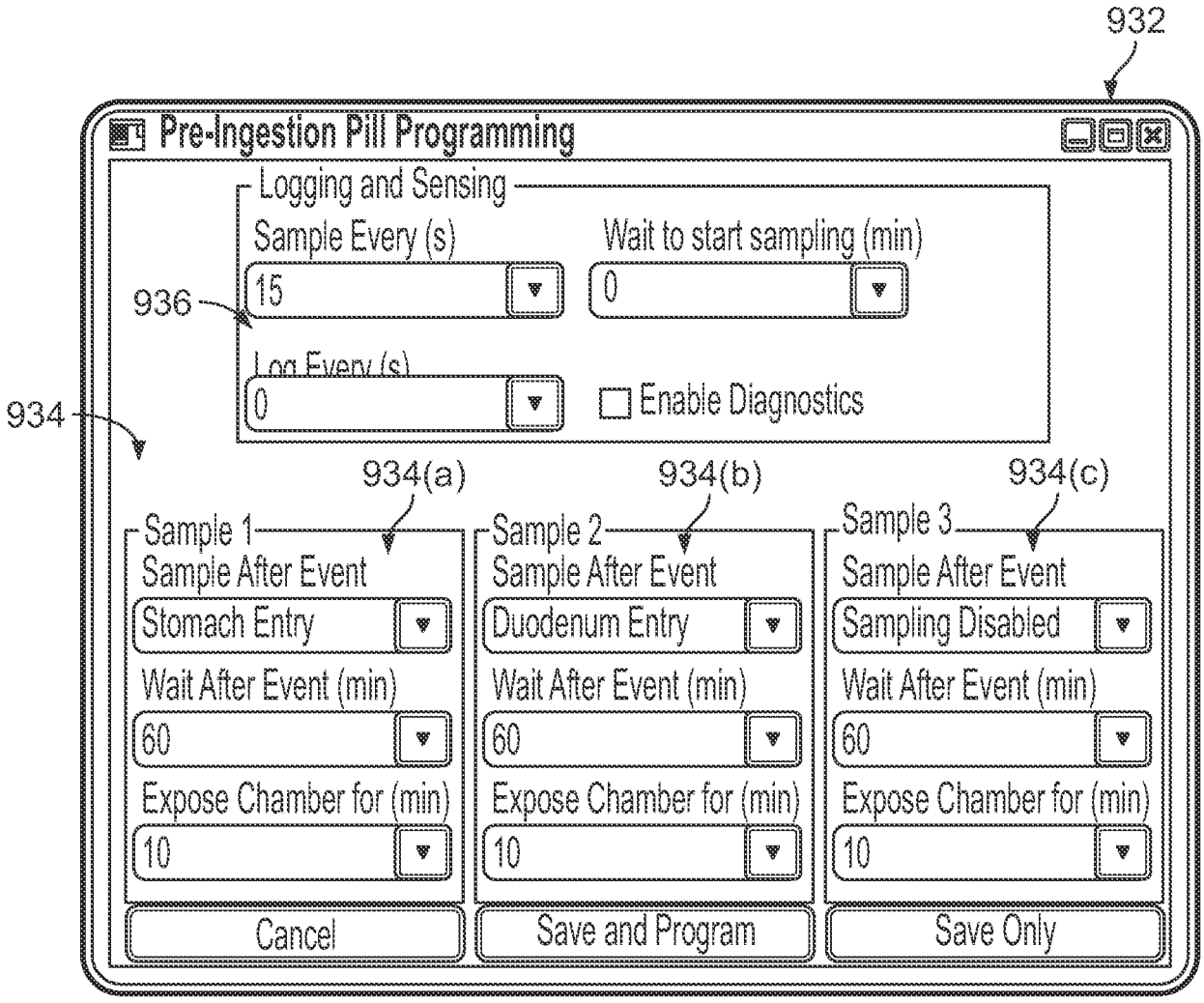

FIG. 18B

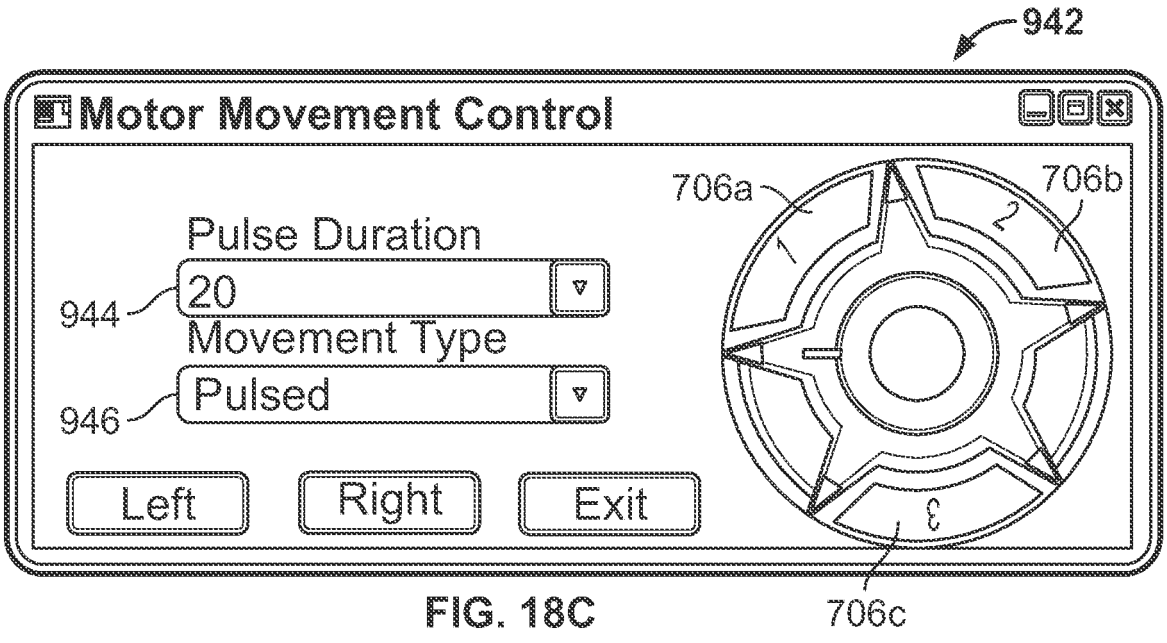

FIG. 18C

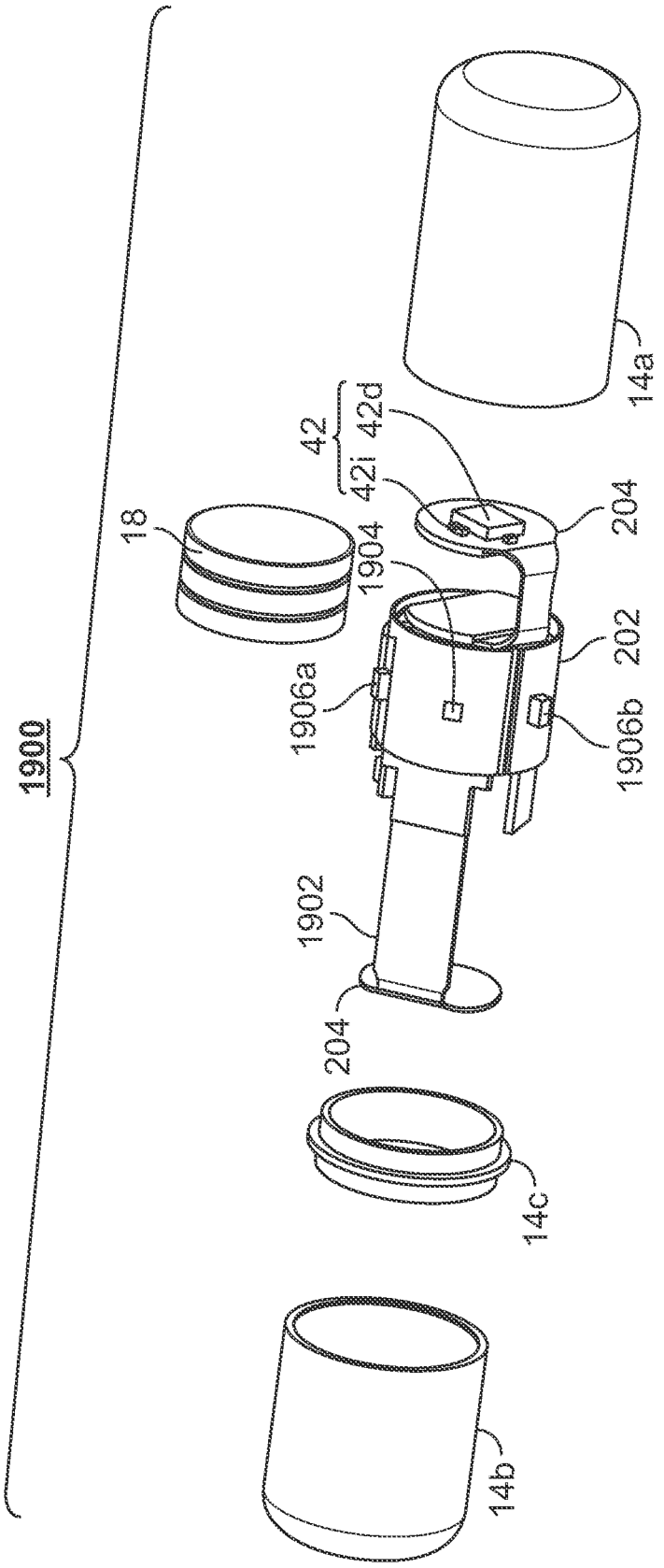
1900
18
1904
1906a
1902
204
14c
14b
42
42d
42i
204
202
1906b
14a

FIG. 19

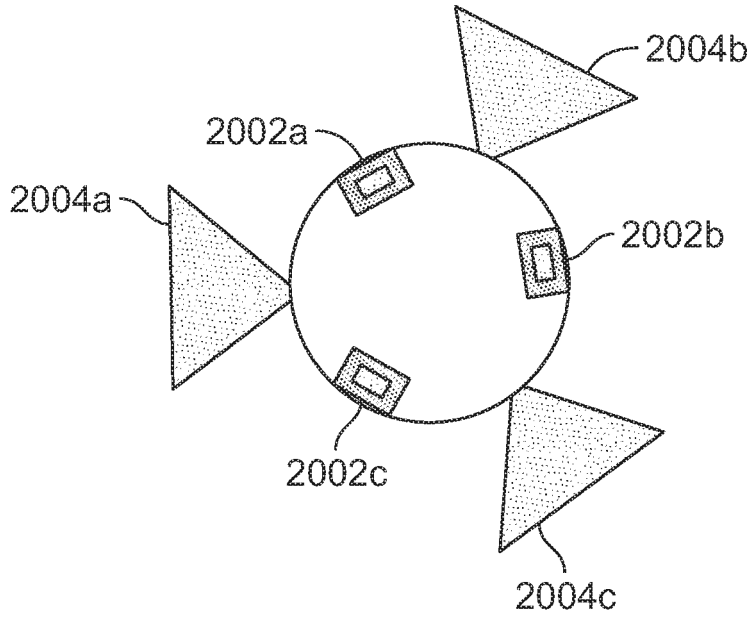
2004b
2002a
2004a
2002b
2002c
2004c

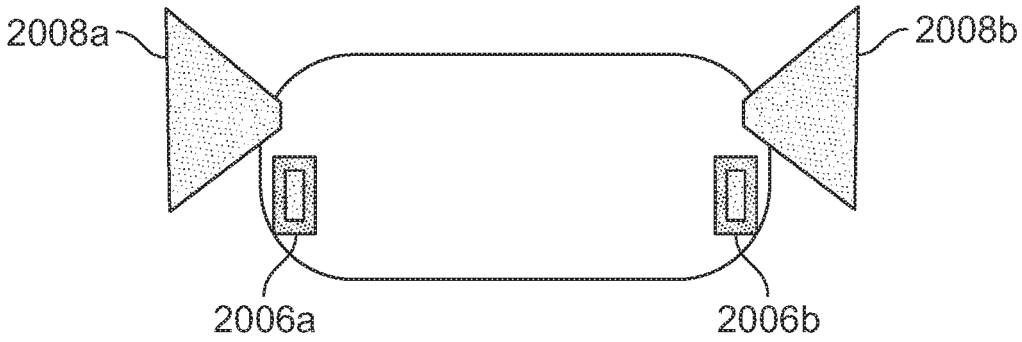
2008a
2008b
2006a
2006b

FIG. 20

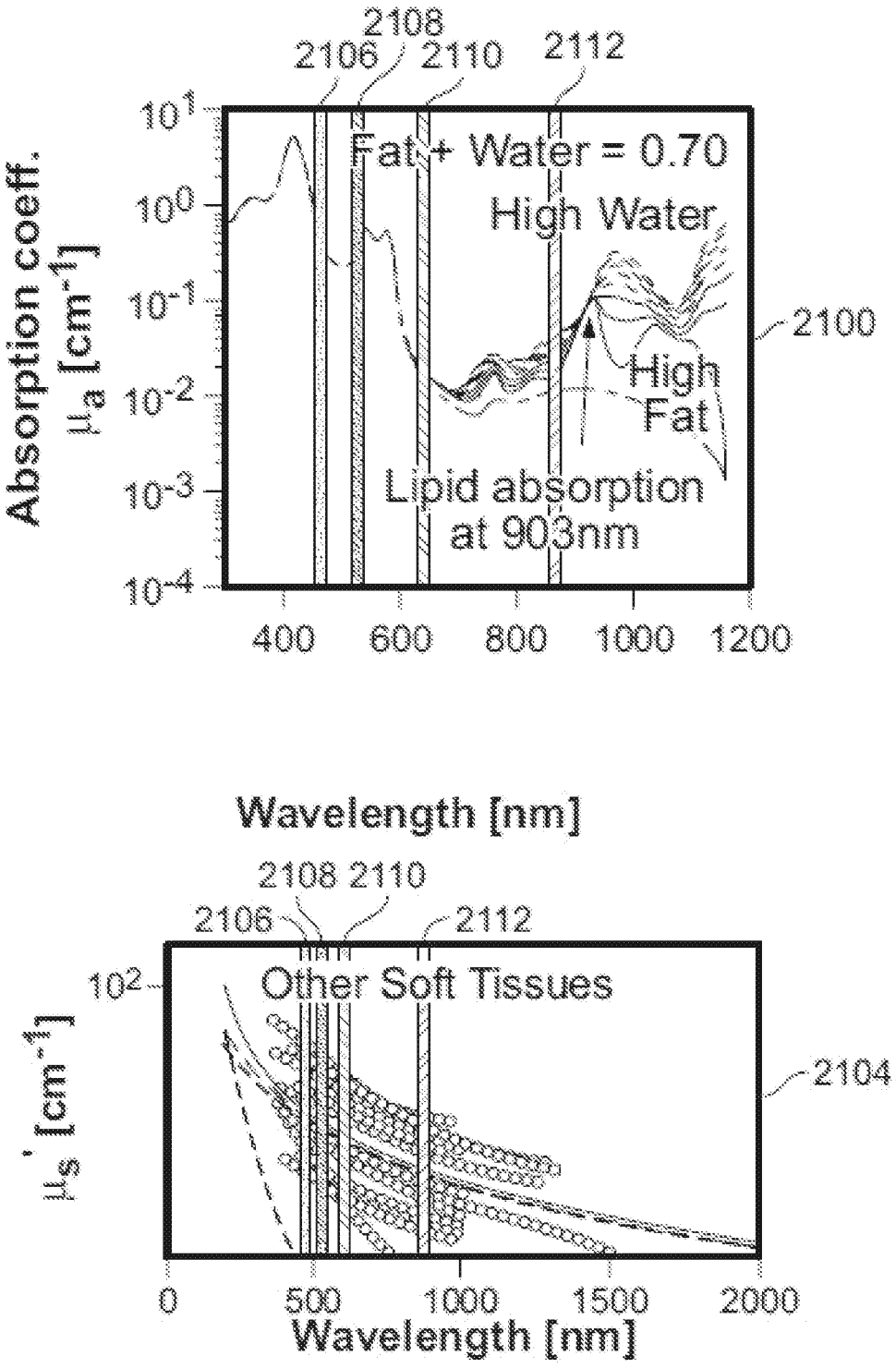
2108
2106
2110
2112
Absorption coeff.
μ_a [cm^{-1}]
10^1
10^0
10^{-1}
10^{-2}
10^{-3}
10^{-4}
Fat + Water = 0.70
High Water
High Fat
Lipid absorption at 903nm
2100
400
600
800
1000
1200
Wavelength [nm]
2108 2110
2106
2112
10^2
Other Soft Tissues
μ_s' [cm^{-1}]
2104
0
500
1000
1500
2000
Wavelength [nm]

FIG. 21

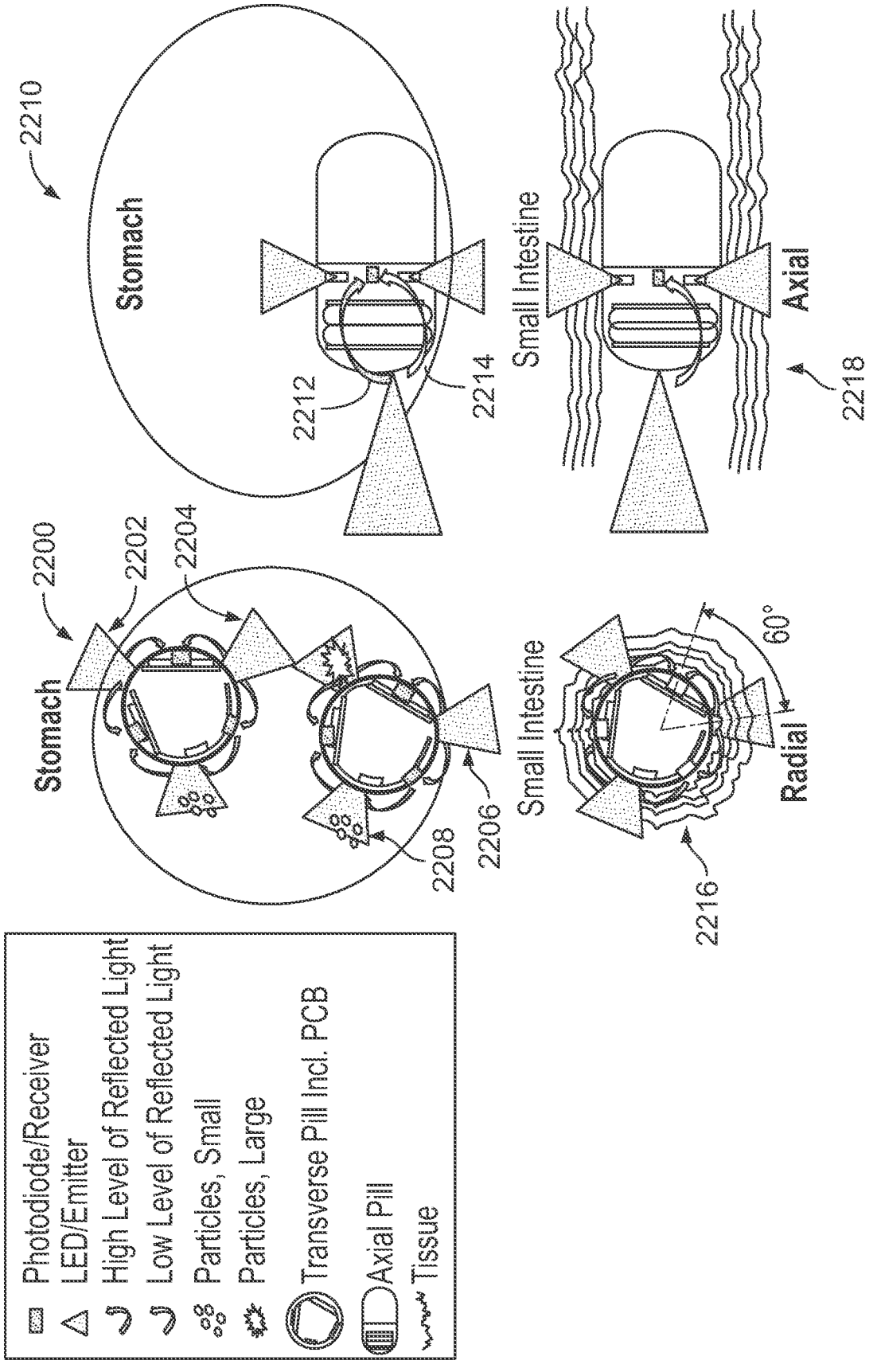
Photodiode/Receiver
LED/Emitter
High Level of Reflected Light
Low Level of Reflected Light
Particles, Small
Particles, Large
Transverse Pill Incl. PCB
Axial Pill
Tissue
2200
2202
2204
2206
2208
2210
2212
2214
2216
2218
Stomach
Small Intestine
Radial
Axial
60°

FIG. 22

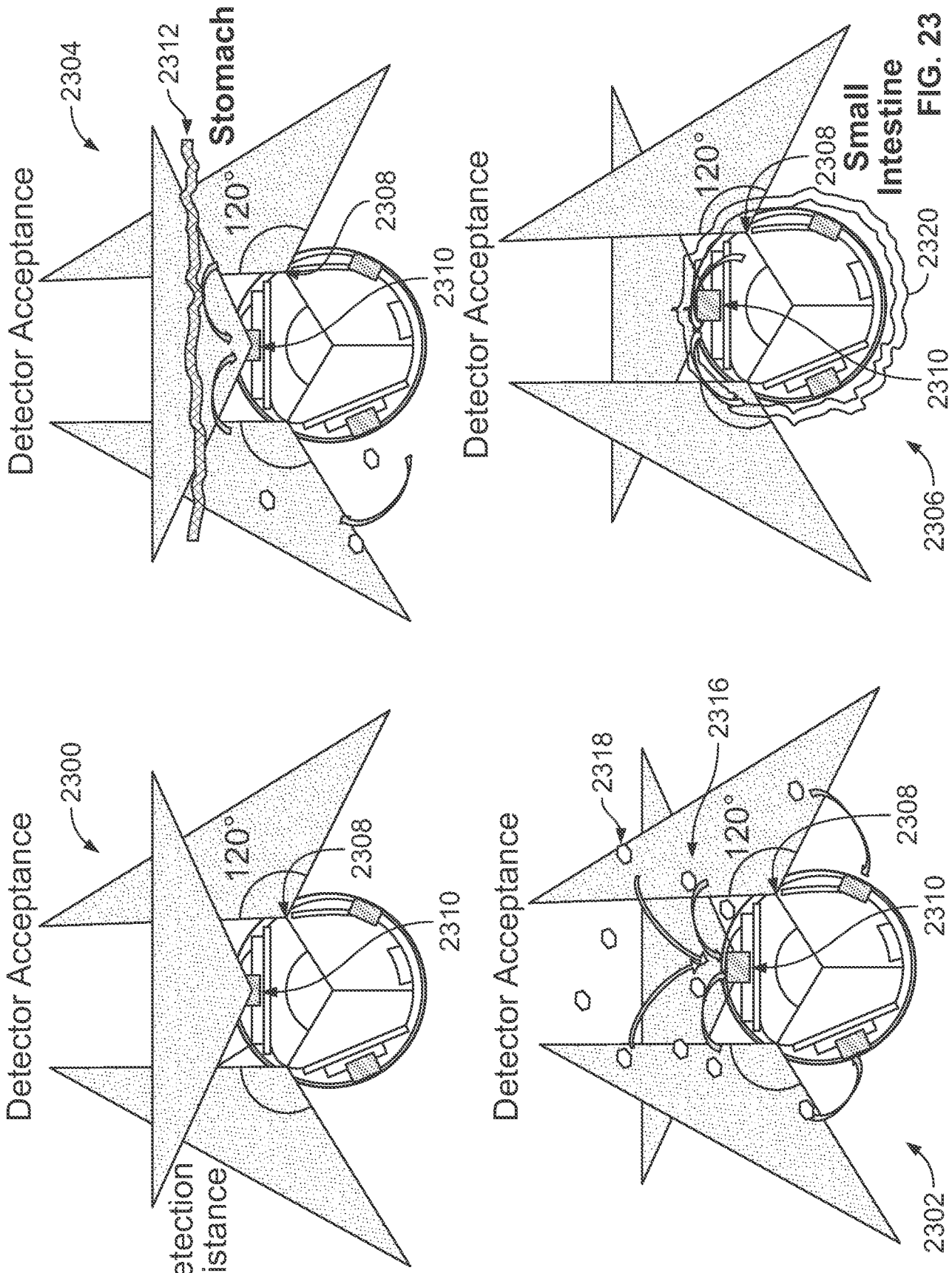
Detector Acceptance
2300
120°
2308
2310
Detection Distance
2302
Detector Acceptance
2304
2312
Stomach
120°
2308
2310
2306
Detector Acceptance
2316
2318
120°
2308
2310
Detector Acceptance
120°
2308
Small Intestine
2320
2310

FIG. 23

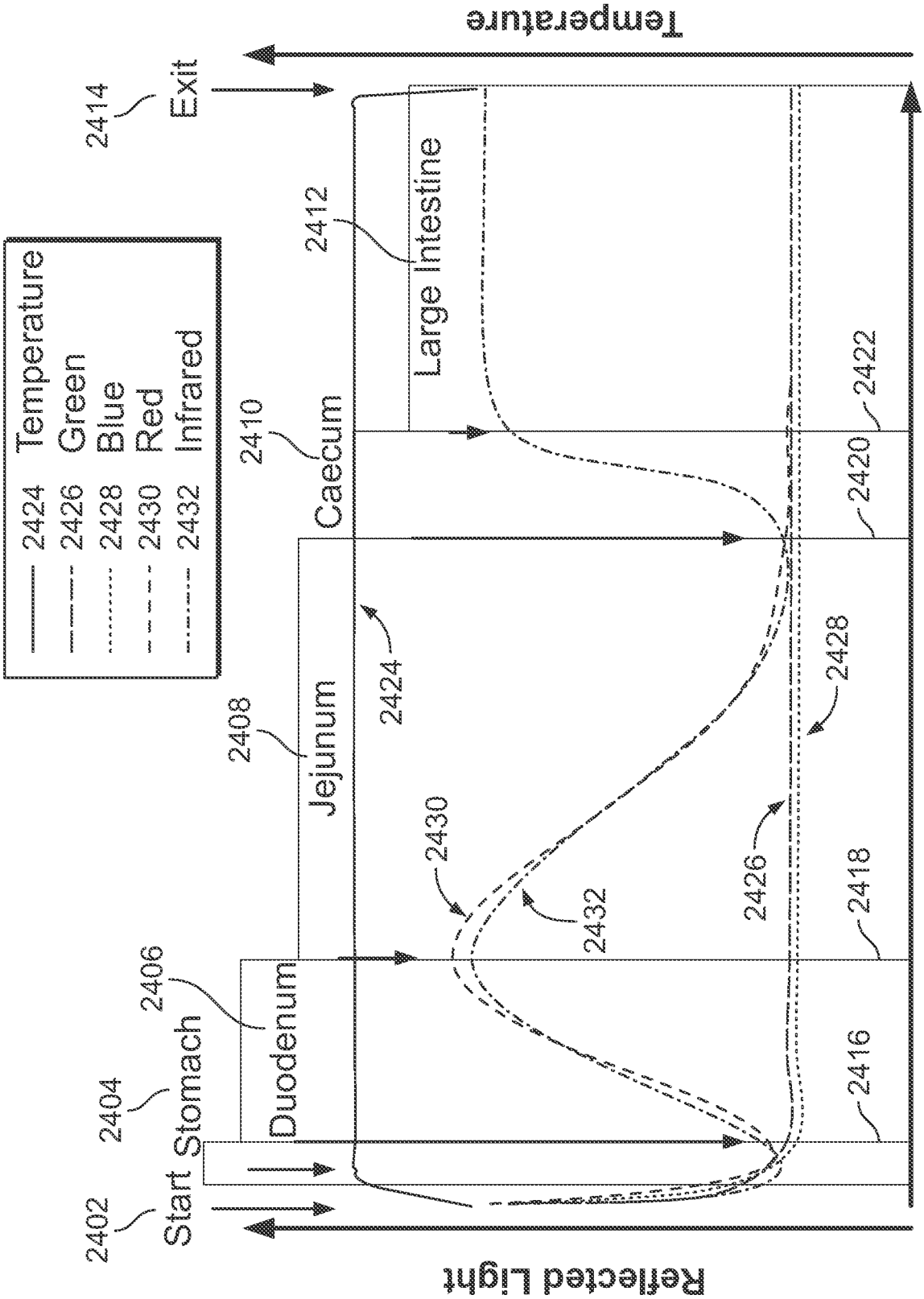
Temperature
Reflected Light
Time
2402
Start Stomach
2404
2406
Duodenum
2408
Jejunum
2410
Caecum
2412
Large Intestine
2414
Exit
2416
2418
2420
2422
2424
2426
2428
2430
2432
2424 Temperature
2426 Green
2428 Blue
2430 Red
2432 Infrared

FIG. 24

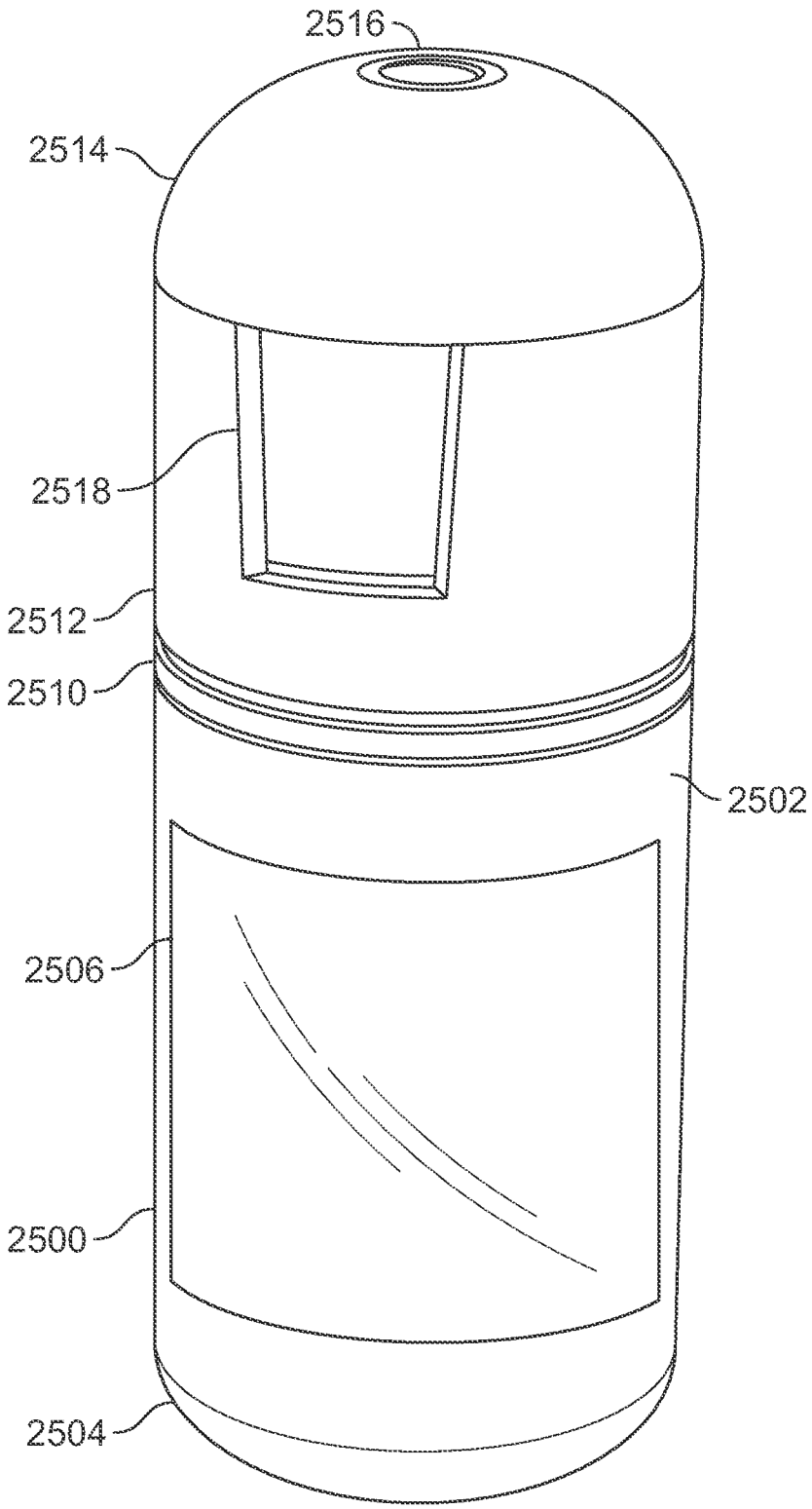

FIG. 25

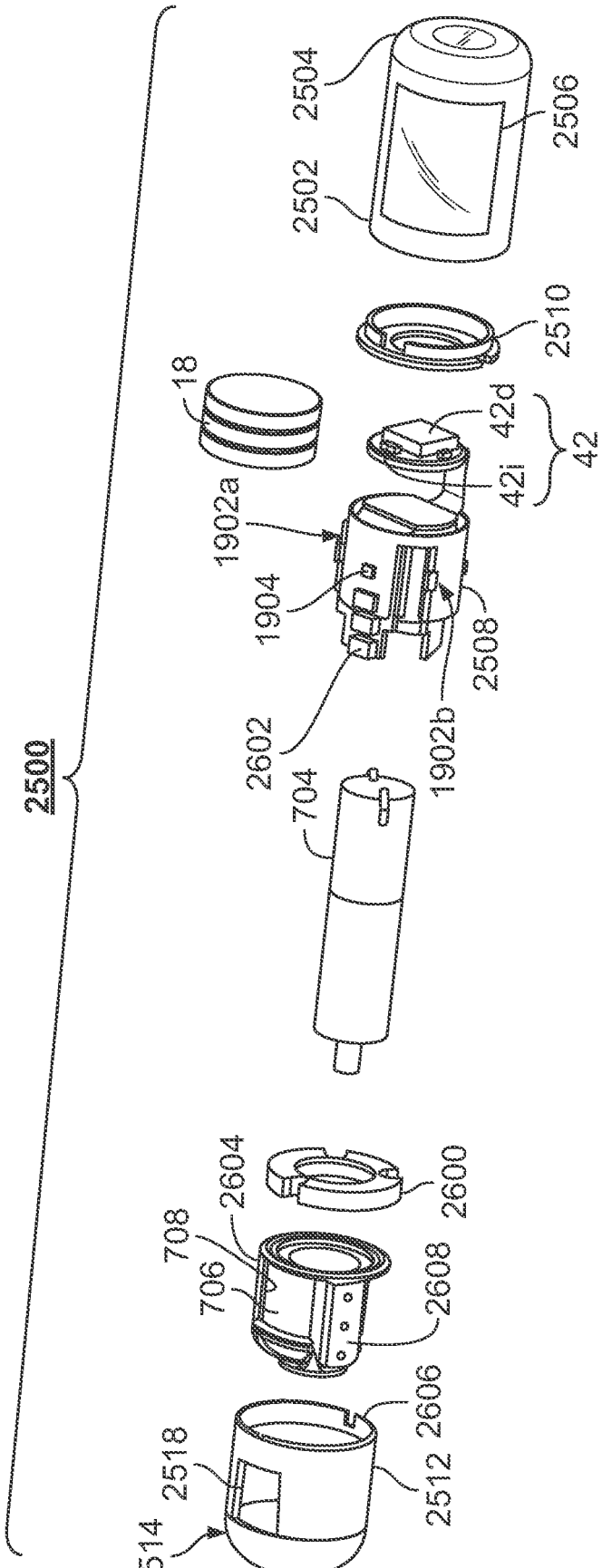
2500
2504
2506
2502
2510
18
42d
42
42i
1902a
1904
2602
2508
1902b
704
2604
2600
708
706
2608
2606
2518
2512
2514
2516

FIG. 26

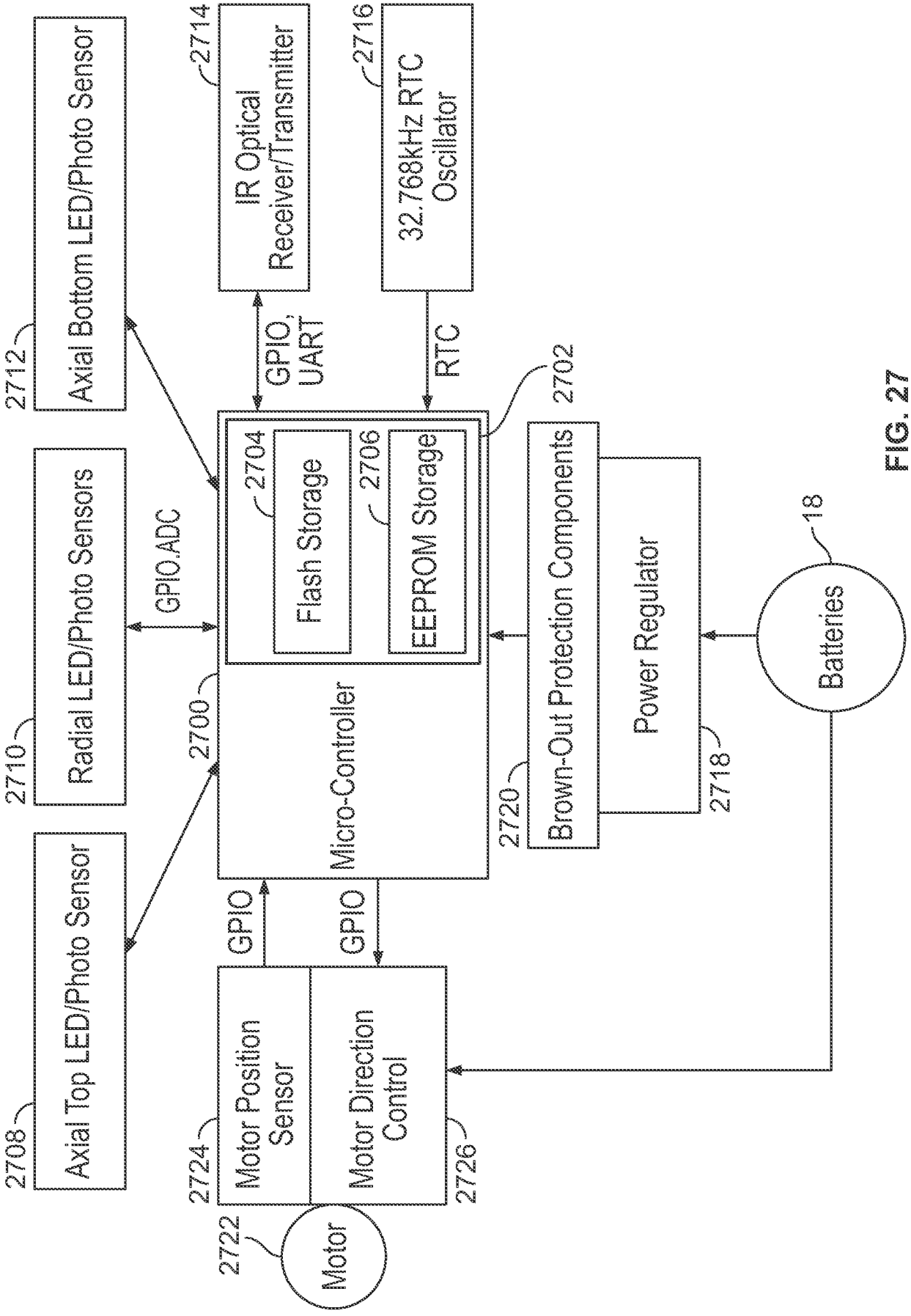
2712
Axial Bottom LED/Photo Sensor
2714
IR Optical Receiver/Transmitter
2716
32.768kHz RTC Oscillator
GPIO, UART
RTC
2710
Radial LED/Photo Sensors
GPIO,ADC
2704
Flash Storage
2706
EEPROM Storage
2702
2700
Micro-Controller
2708
Axial Top LED/Photo Sensor
GPIO
GPIO
2720
Brown-Out Protection Components
Power Regulator
2718
18
Batteries
2724
Motor Position Sensor
Motor Direction Control
2726
2722
Motor

FIG. 27

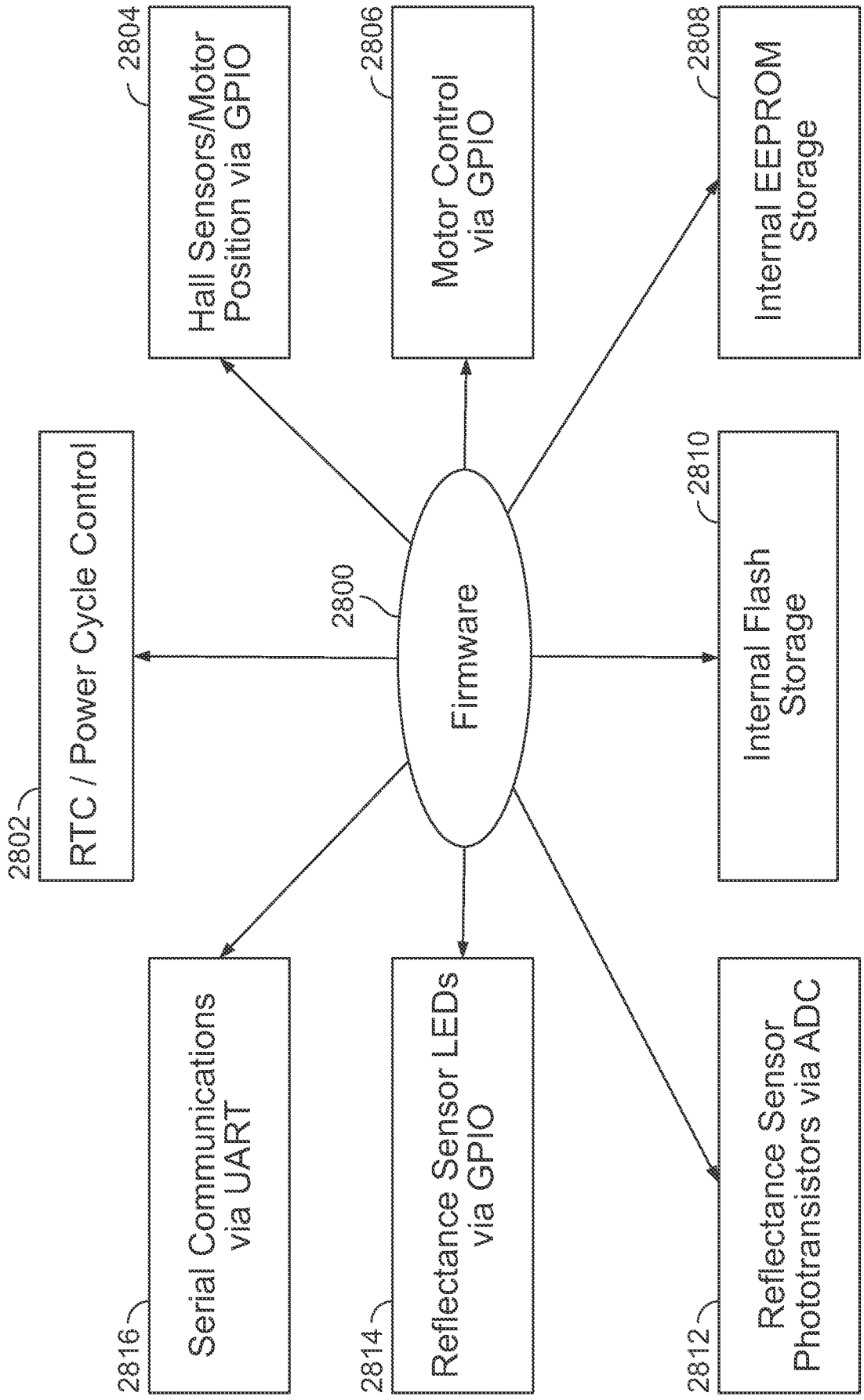
2804
Hall Sensors/Motor Position via GPIO
2806
Motor Control via GPIO
2808
Internal EEPROM Storage
2802
RTC / Power Cycle Control
2800
Firmware
2810
Internal Flash Storage
2816
Serial Communications via UART
2814
Reflectance Sensor LEDs via GPIO
2812
Reflectance Sensor Phototransistors via ADC

FIG. 28

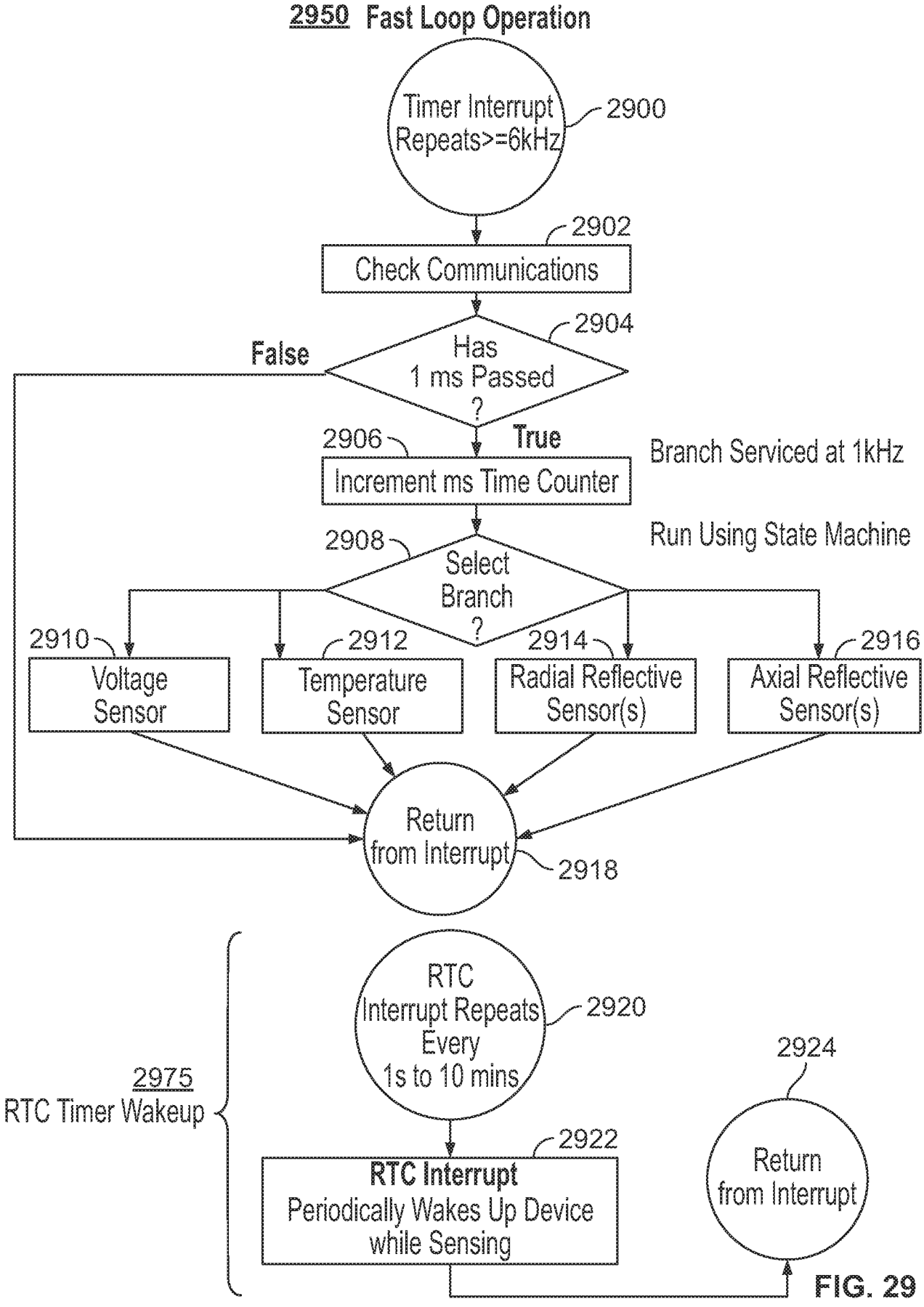
2950 Fast Loop Operation
Timer Interrupt Repeats>=6kHz
2900
2902
Check Communications
2904
Has 1 ms Passed ?
False
True
2906
Increment ms Time Counter
Branch Serviced at 1kHz
Run Using State Machine
2908
Select Branch ?
2910
Voltage Sensor
2912
Temperature Sensor
2914
Radial Reflective Sensor(s)
2916
Axial Reflective Sensor(s)
Return from Interrupt
2918
2975
RTC Timer Wakeup
RTC Interrupt Repeats Every 1s to 10 mins
2920
2922
RTC Interrupt
Periodically Wakes Up Device while Sensing
2924
Return from Interrupt

FIG. 29

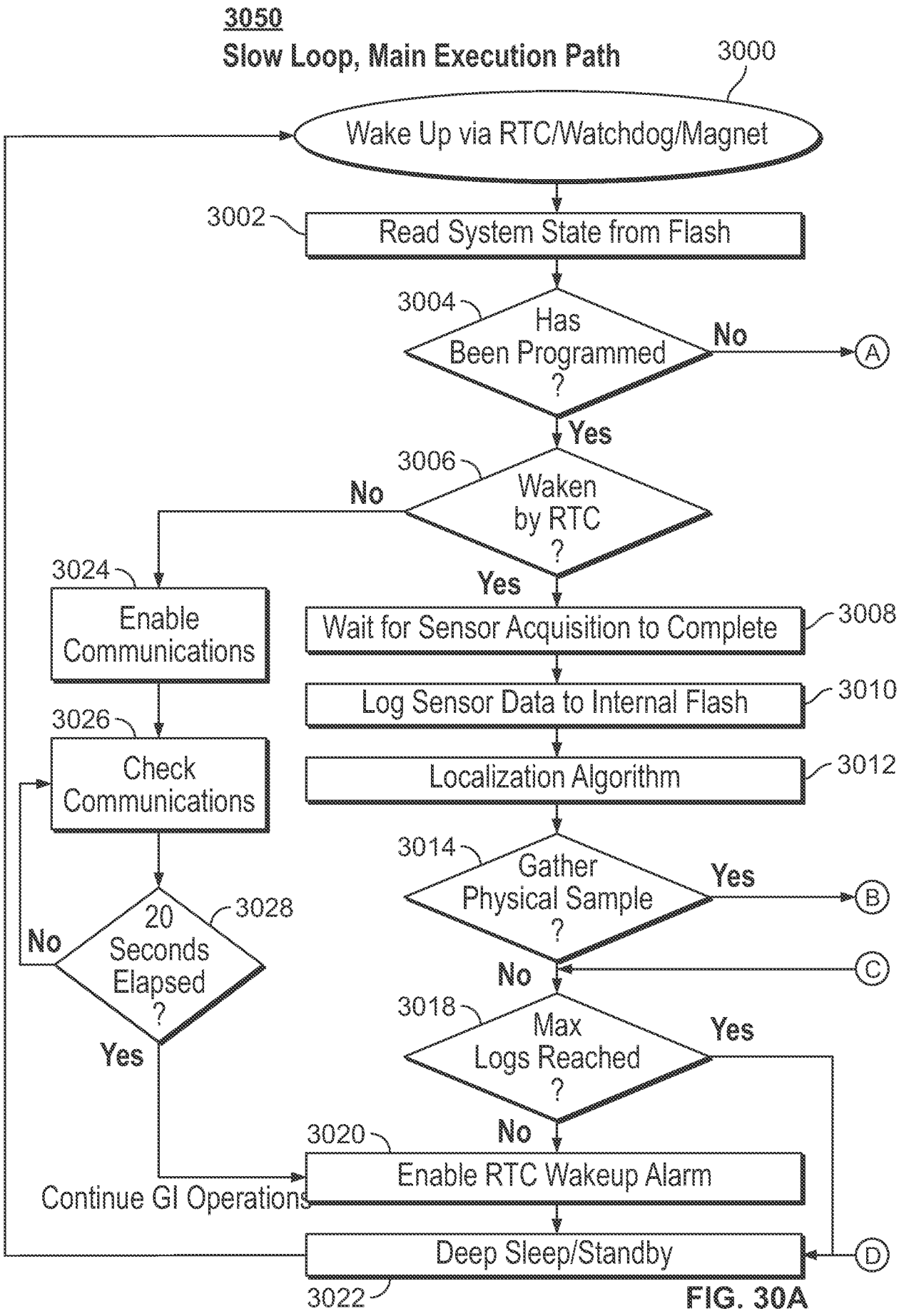
3050
Slow Loop, Main Execution Path
3000
Wake Up via RTC/Watchdog/Magnet
3002
Read System State from Flash
3004
Has Been Programmed ?
No
A
Yes
3006
Waken by RTC ?
No
Yes
3024
Enable Communications
3026
Check Communications
3028
20 Seconds Elapsed ?
No
Yes
Continue GI Operations
Wait for Sensor Acquisition to Complete
3008
Log Sensor Data to Internal Flash
3010
Localization Algorithm
3012
3014
Gather Physical Sample ?
Yes
B
No
C
3018
Max Logs Reached ?
Yes
No
3020
Enable RTC Wakeup Alarm
Deep Sleep/Standby
D
3022

FIG. 30A

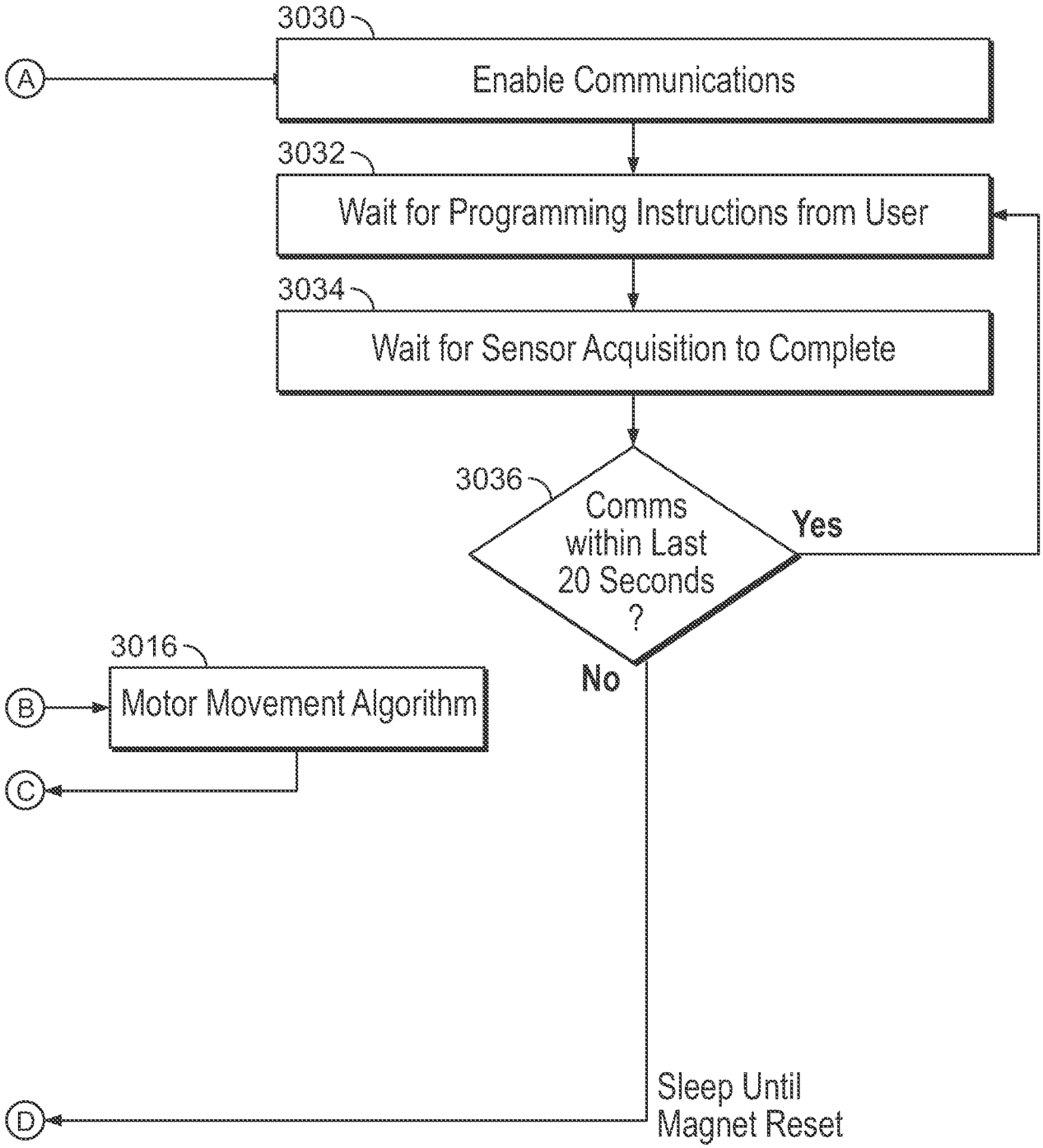
3030
A
Enable Communications
3032
Wait for Programming Instructions from User
3034
Wait for Sensor Acquisition to Complete
3036
Comms within Last 20 Seconds ?
Yes
No
3016
B
Motor Movement Algorithm
C
D
Sleep Until Magnet Reset

FIG. 30B

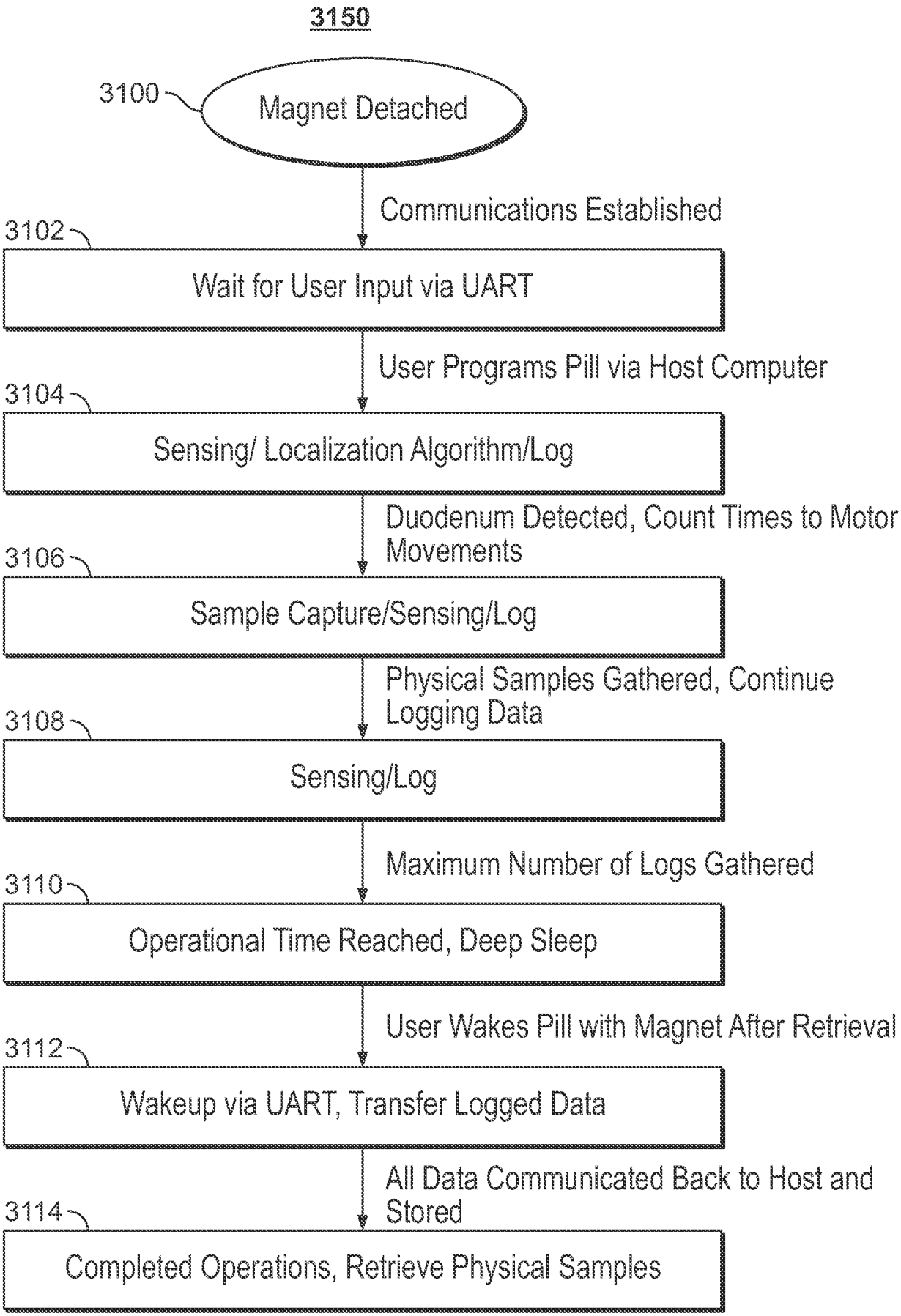
3150
3100
Magnet Detached
Communications Established
3102
Wait for User Input via UART
User Programs Pill via Host Computer
3104
Sensing/ Localization Algorithm/Log
Duodenum Detected, Count Times to Motor Movements
3106
Sample Capture/Sensing/Log
Physical Samples Gathered, Continue Logging Data
3108
Sensing/Log
Maximum Number of Logs Gathered
3110
Operational Time Reached, Deep Sleep
User Wakes Pill with Magnet After Retrieval
3112
Wakeup via UART, Transfer Logged Data
All Data Communicated Back to Host and Stored
3114
Completed Operations, Retrieve Physical Samples

FIG. 31

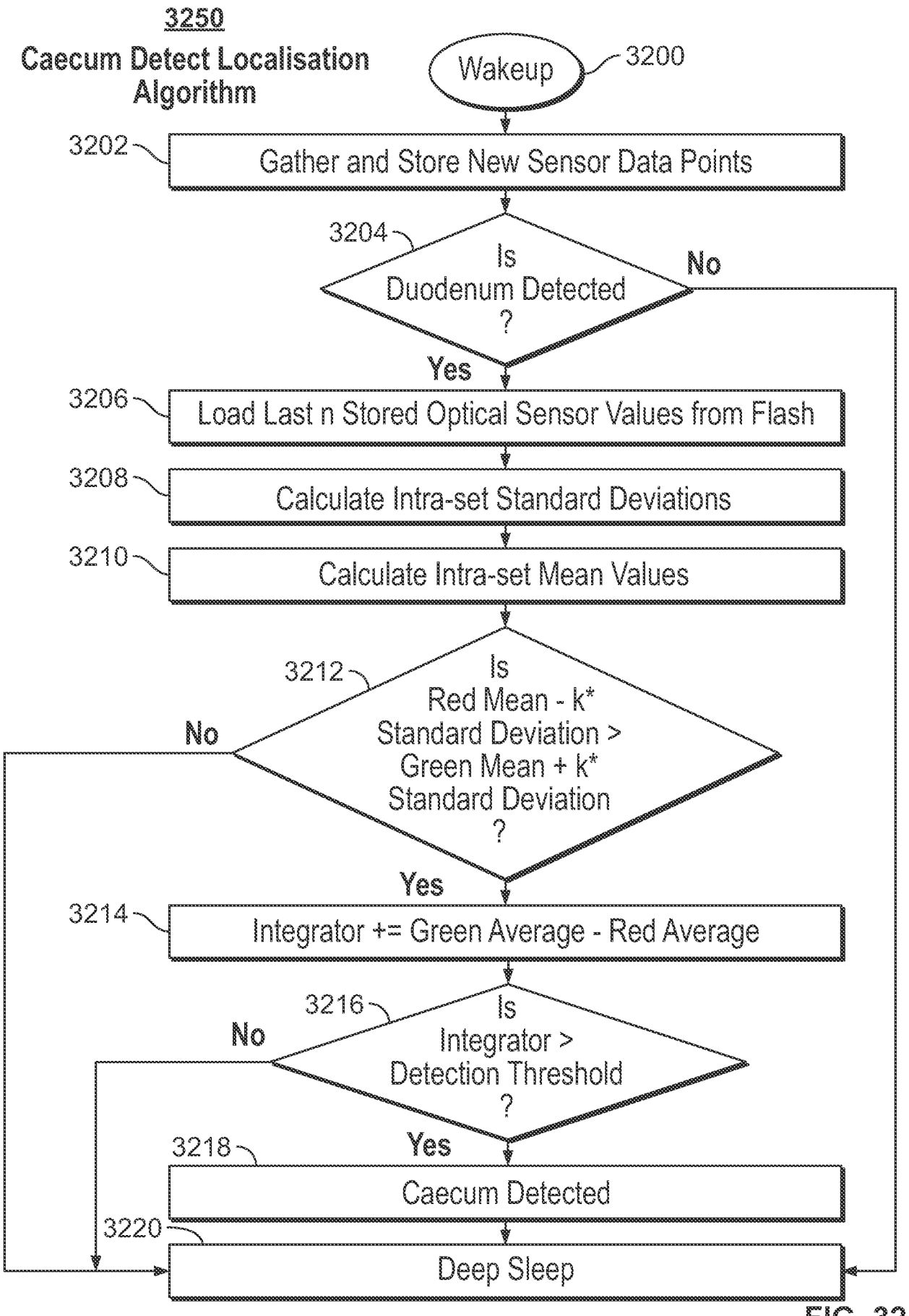
3250
Caecum Detect Localisation Algorithm
Wakeup
3200
3202
Gather and Store New Sensor Data Points
3204
Is Duodenum Detected ?
No
Yes
3206
Load Last n Stored Optical Sensor Values from Flash
3208
Calculate Intra-set Standard Deviations
3210
Calculate Intra-set Mean Values
3212
Is Red Mean - k* Standard Deviation > Green Mean + k* Standard Deviation ?
No
Yes
3214
Integrator += Green Average - Red Average
3216
Is Integrator > Detection Threshold ?
No
Yes
3218
Caecum Detected
3220
Deep Sleep

FIG. 32

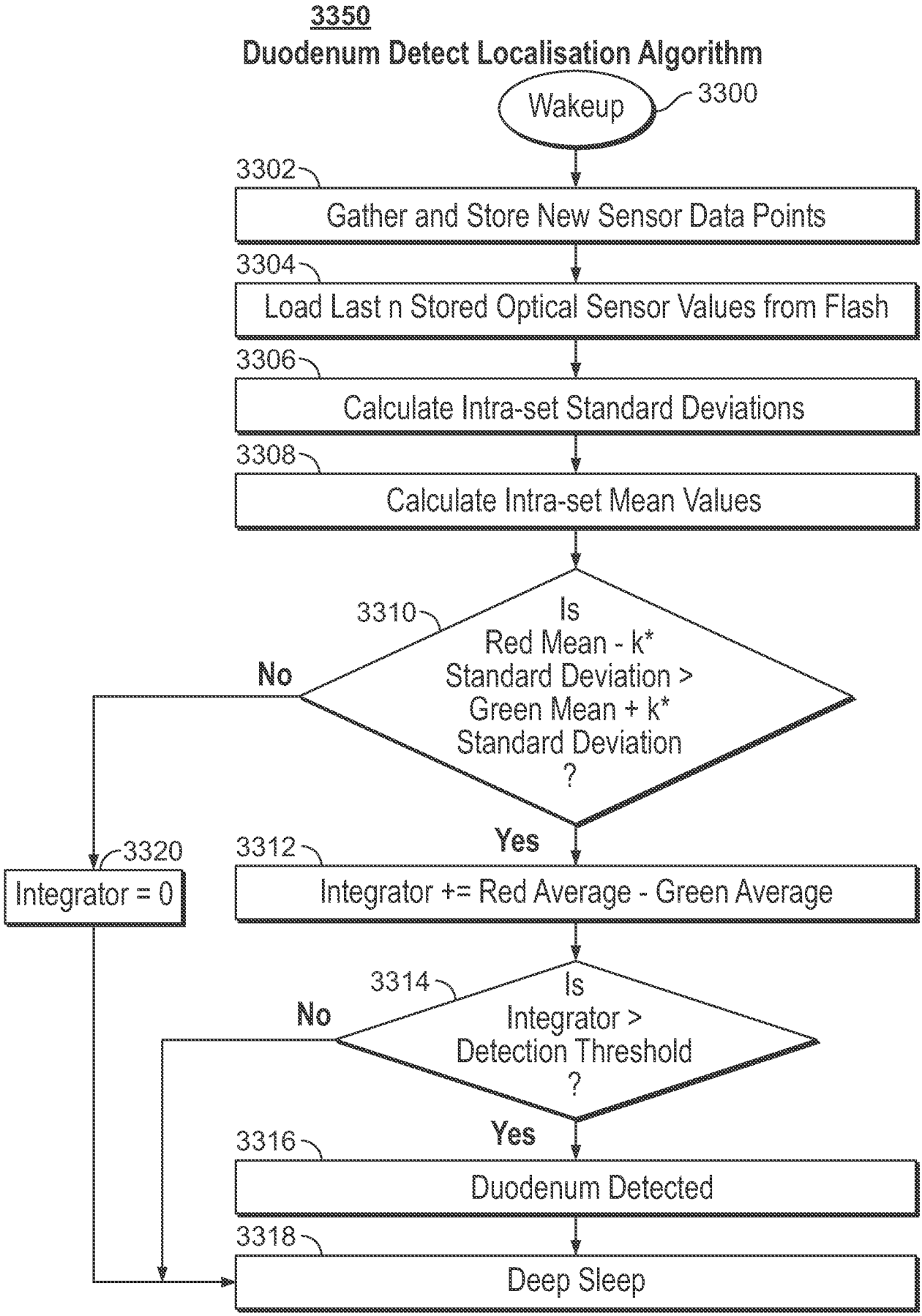
3350
Duodenum Detect Localisation Algorithm
Wakeup
3300
3302
Gather and Store New Sensor Data Points
3304
Load Last n Stored Optical Sensor Values from Flash
3306
Calculate Intra-set Standard Deviations
3308
Calculate Intra-set Mean Values
3310
Is Red Mean - k* Standard Deviation > Green Mean + k* Standard Deviation ?
No
Yes
3320
Integrator = 0
3312
Integrator += Red Average - Green Average
3314
Is Integrator > Detection Threshold ?
No
Yes
3316
Duodenum Detected
3318
Deep Sleep

FIG. 33

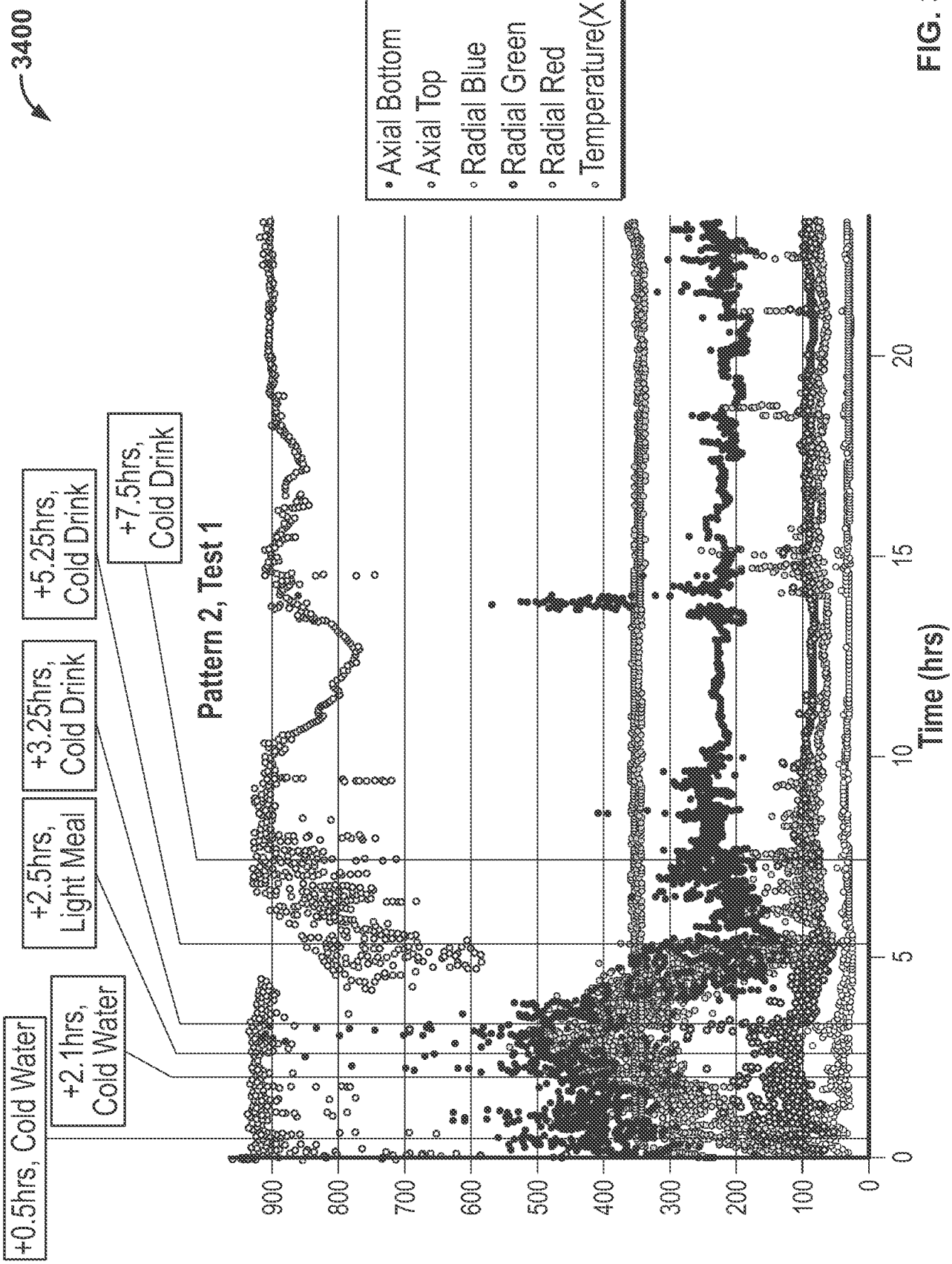
3400
+0.5hrs, Cold Water
+2.1hrs, Cold Water
+2.5hrs, Light Meal
+3.25hrs, Cold Drink
+5.25hrs, Cold Drink
+7.5hrs, Cold Drink
Pattern 2, Test 1
Axial Bottom
Axial Top
Radial Blue
Radial Green
Radial Red
Temperature(X10)
900
800
700
600
500
400
300
200
100
0
0
5
10
15
20
Time (hrs)

FIG. 34

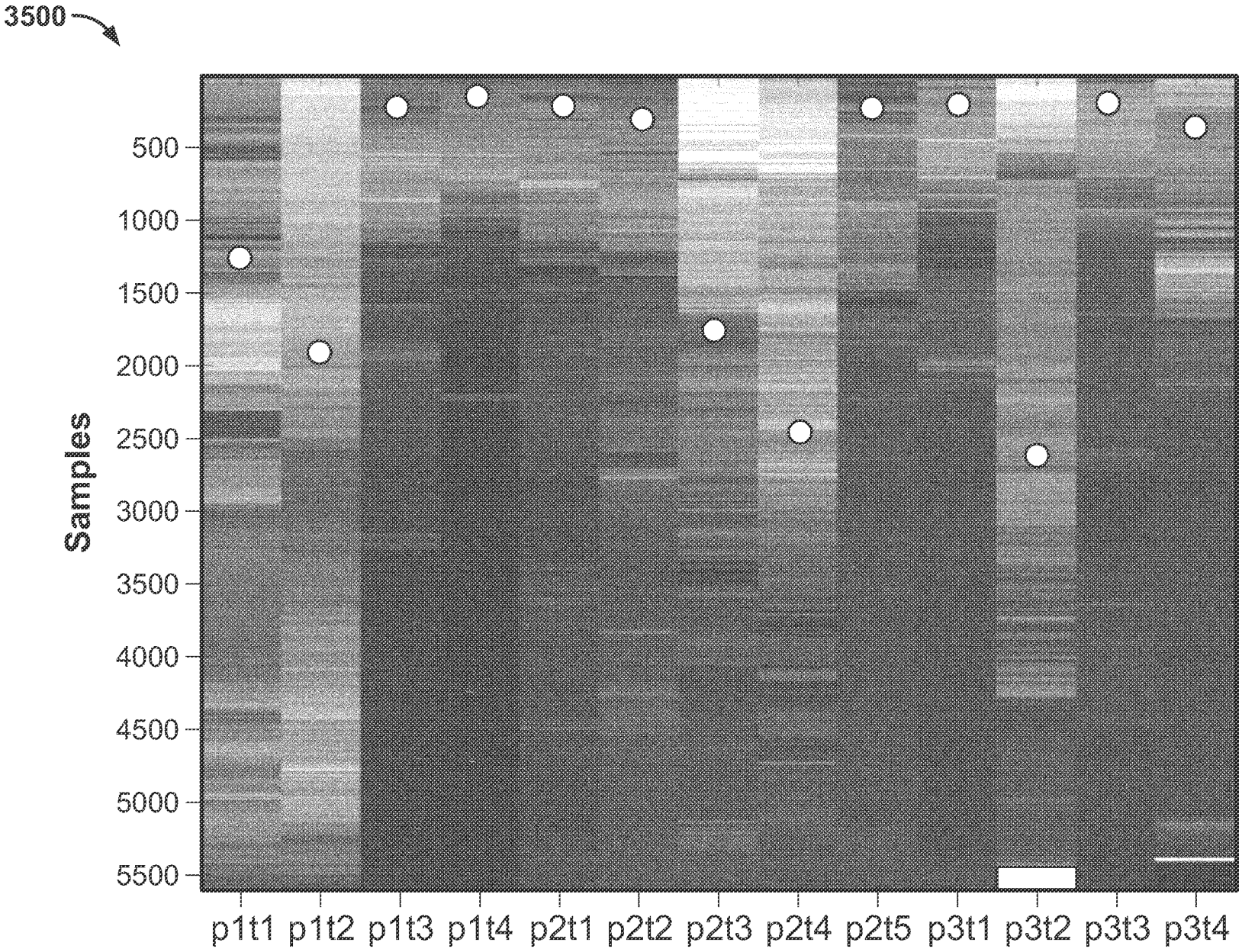
3500
Samples
500
1000
1500
2000
2500
3000
3500
4000
4500
5000
5500
p1t1 p1t2 p1t3 p1t4 p2t1 p2t2 p2t3 p2t4 p2t5 p3t1 p3t2 p3t3 p3t4

FIG. 35