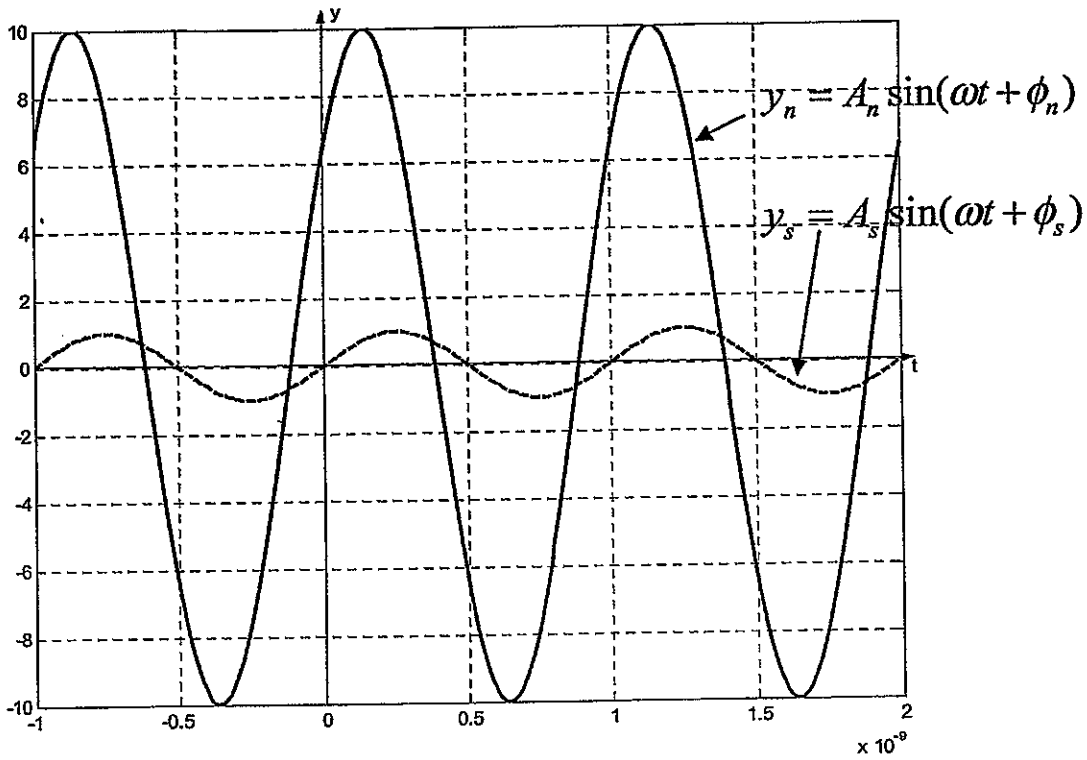
y
10
8
6
4
2
0
-2
-4
-6
-8
-10
-1
-0.5
0
0.5
1
1.5
2
x 10^-9
t
$y_n = A_n \sin(\omega t + \phi_n)$
$y_s = A_s \sin(\omega t + \phi_s)$

Figure 1

Figure 2

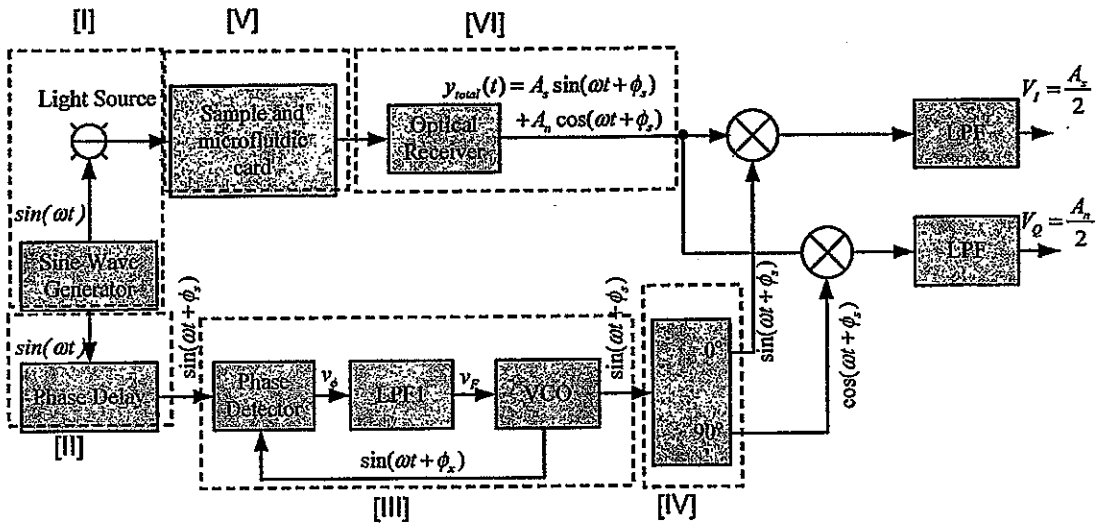
[I]
[V]
[VI]
Light Source
Sample and microfluidic card
Optical Receiver
$y_{total}(t) = A_s \sin(\omega t + \phi_s) + A_n \cos(\omega t + \phi_s)$
$V_I = \frac{A_s}{2}$
$V_Q = \frac{A_n}{2}$
LPF
LPF
$\sin(\omega t)$
Sine Wave Generator
$\sin(\omega t)$
Phase Delay
[II]
$\sin(\omega t + \phi_s)$
Phase Detector
v_d
LPF1
v_c
VCO
$\sin(\omega t + \phi_s)$
0°
90°
$\sin(\omega t + \phi_s)$
$\cos(\omega t + \phi_s)$
$\sin(\omega t + \phi_s)$
[III]
[IV]

Figure 3

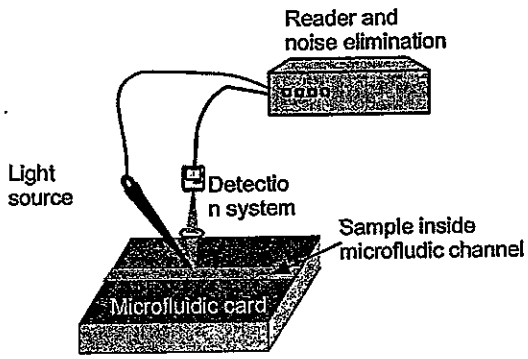
Reader and
noise elimination
Light
source
Detectio
n system
Sample inside
microfludic channel
Microfluidic card

Figure 4

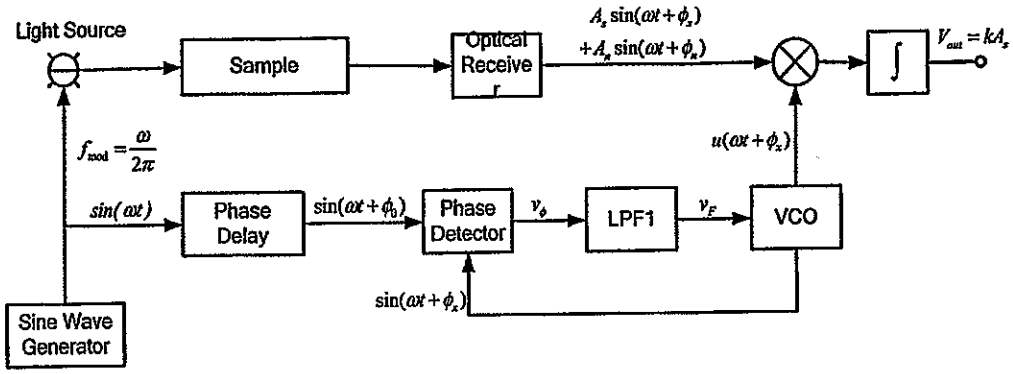
Light Source
Sample
Optical Receive
$A_s \sin(\omega t + \phi_s)$
$+A_n \sin(\omega t + \phi_n)$
$V_{out} = kA_s$
$f_{mod} = \frac{\omega}{2\pi}$
$u(\omega t + \phi_s)$
$sin(\omega t)$
Phase Delay
$\sin(\omega t + \phi_0)$
Phase Detector
v_ϕ
LPF1
v_F
VCO
$\sin(\omega t + \phi_s)$
Sine Wave Generator

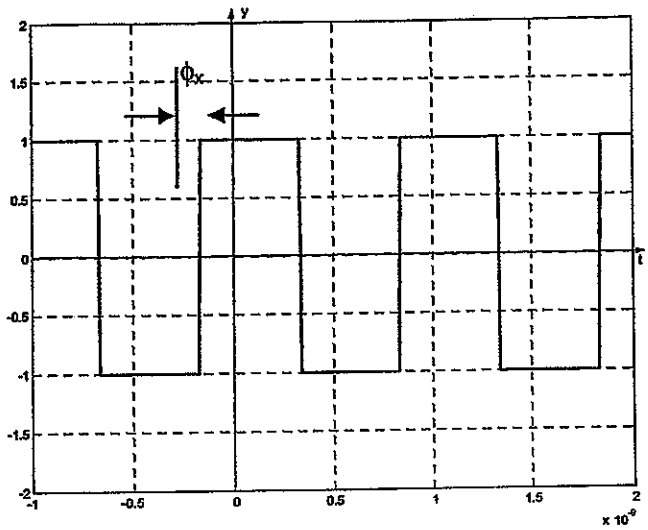

Figure 5

Figure 6

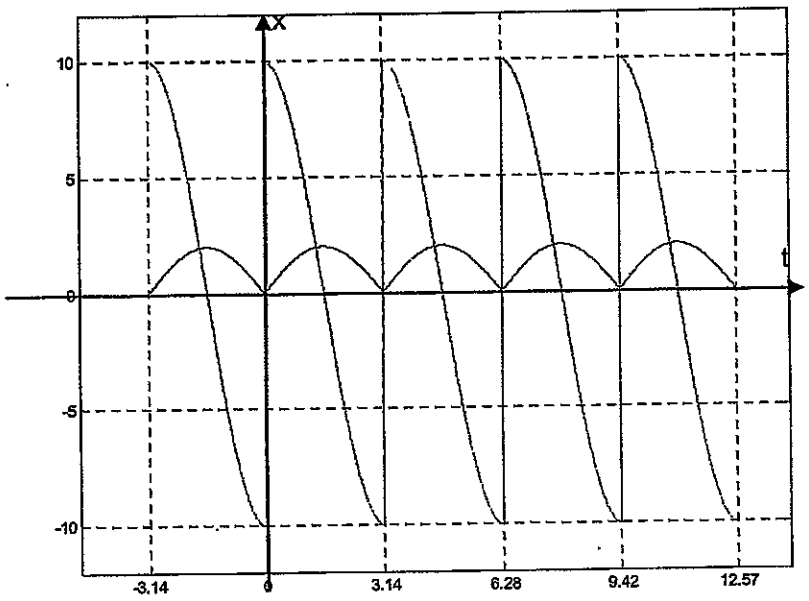

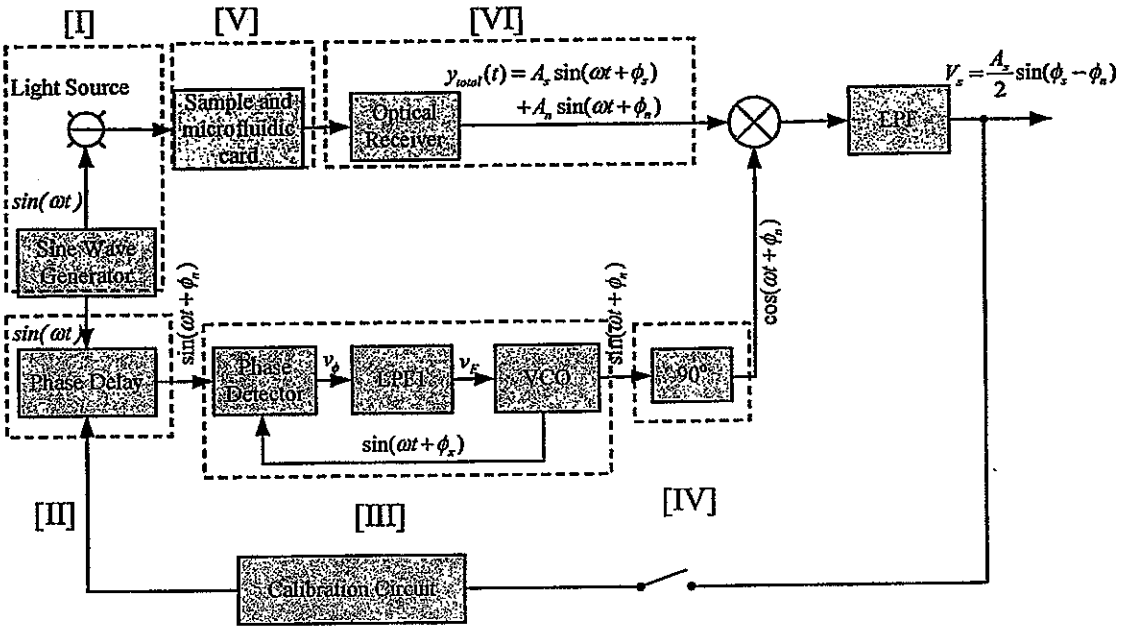
[I]
[V]
[VI]
Light Source
Sample and microfluidic card
Optical Receiver
$y_{total}(t) = A_s \sin(\omega t + \phi_s) + A_n \sin(\omega t + \phi_n)$
$V_s = \frac{A_s}{2} \sin(\phi_s - \phi_n)$
LPF
$\sin(\omega t)$
Sine Wave Generator
$\sin(\omega t + \phi_n)$
$\cos(\omega t + \phi_n)$
$\sin(\omega t)$
Phase Delay
Phase Detector
v_ϕ
LPF
v_F
VCO
$\sin(\omega t + \phi_n)$
90°
$\sin(\omega t + \phi_x)$
[II]
[III]
[IV]
Calibration Circuit

Figure 7

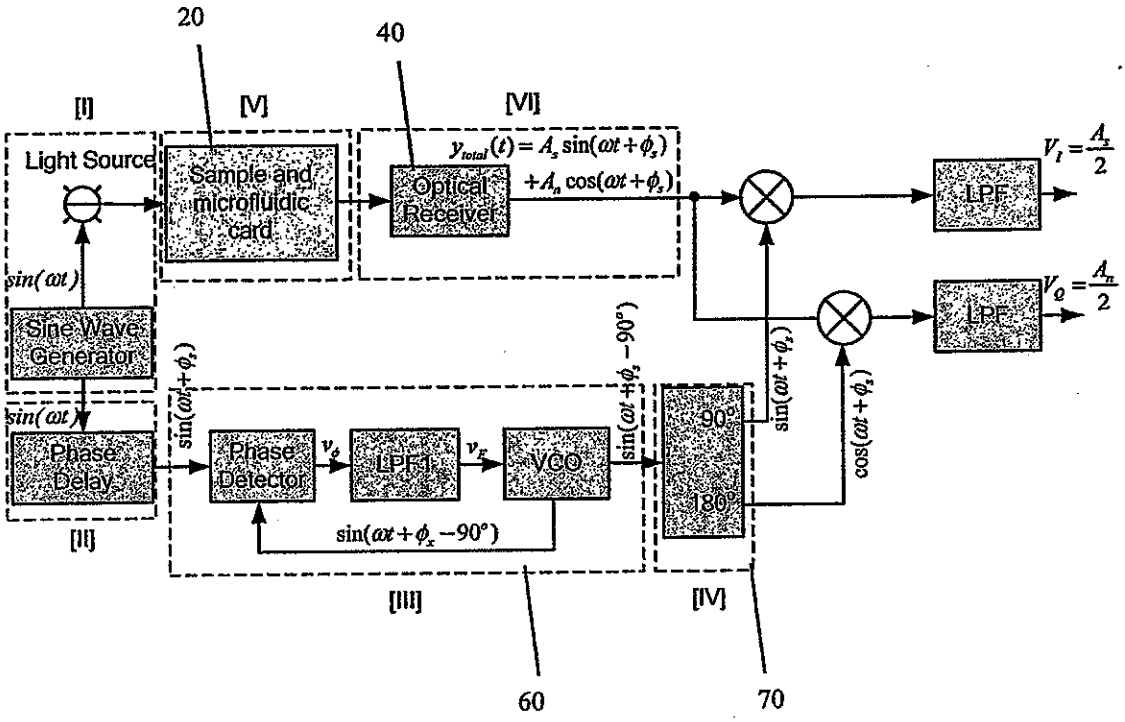
20
40
[I]
[V]
[VI]
Light Source
Sample and microfluidic card
Optical Receiver
$y_{total}(t) = A_s \sin(\omega t + \phi_s) + A_n \cos(\omega t + \phi_s)$
LPF
$V_I = \frac{A_s}{2}$
LPF
$V_Q = \frac{A_n}{2}$
$\sin(\omega t)$
Sine Wave Generator
$\sin(\omega t)$
Phase Delay
[II]
$\sin(\omega t + \phi_s)$
Phase Detector
v_d
LPF
v_c
VCO
$\sin(\omega t + \phi_s - 90°)$
$\sin(\omega t + \phi_x - 90°)$
[III]
90°
180°
[IV]
$\sin(\omega t + \phi_s)$
$\cos(\omega t + \phi_s)$
60
70

Figure 8

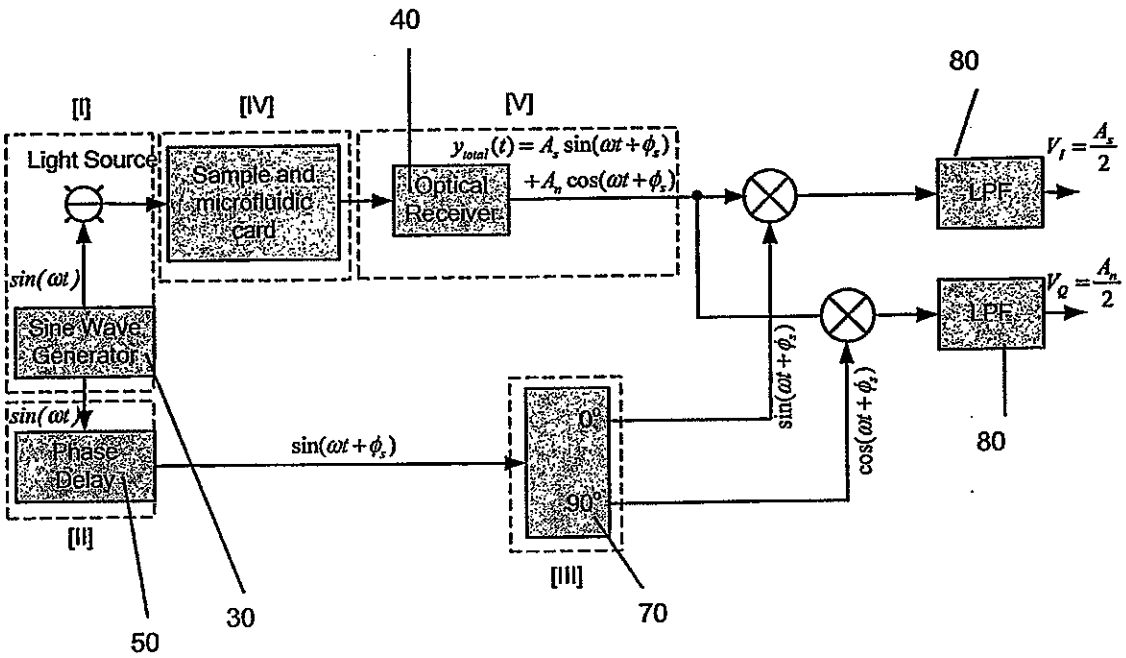
40
80
[I]
[IV]
[V]
Light Source
Sample and microfluidic card
Optical Receiver
$y_{total}(t) = A_s \sin(\omega t + \phi_s)$
$+A_n \cos(\omega t + \phi_s)$
LPF
$V_I = \frac{A_s}{2}$
$V_Q = \frac{A_n}{2}$
$\sin(\omega t)$
Sine Wave Generator
Phase Delay
$\sin(\omega t + \phi_s)$
0°
90°
$\sin(\omega t + \phi_s)$
$\cos(\omega t + \phi_s)$
[II]
[III]
30
50
70
80

Figure 9

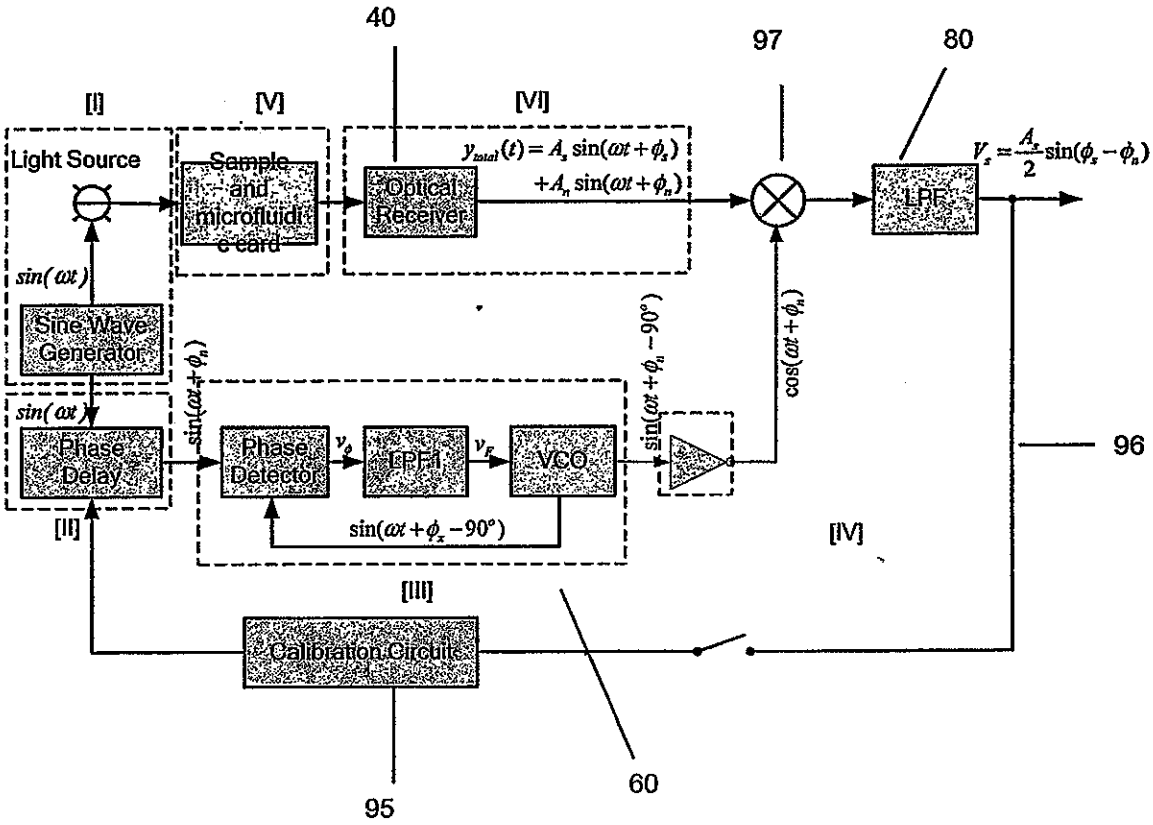
40
97
80
[I]
[V]
[VI]
Light Source
Sample and microfluidic card
Optical Receiver
$y_{total}(t) = A_s \sin(\omega t + \phi_s) + A_n \sin(\omega t + \phi_n)$
$V_x = \frac{A_s}{2}\sin(\phi_s - \phi_n)$
LPF
$\sin(\omega t)$
Sine Wave Generator
$\sin(\omega t)$
Phase Delay
$\sin(\omega t + \phi_n)$
Phase Detector
v_ϕ
LPFI
v_E
VCO
$\sin(\omega t + \phi_n - 90°)$
$\cos(\omega t + \phi_n)$
96
[II]
$\sin(\omega t + \phi_x - 90°)$
[IV]
[III]
Calibration Circuit
95
60

Figure 10

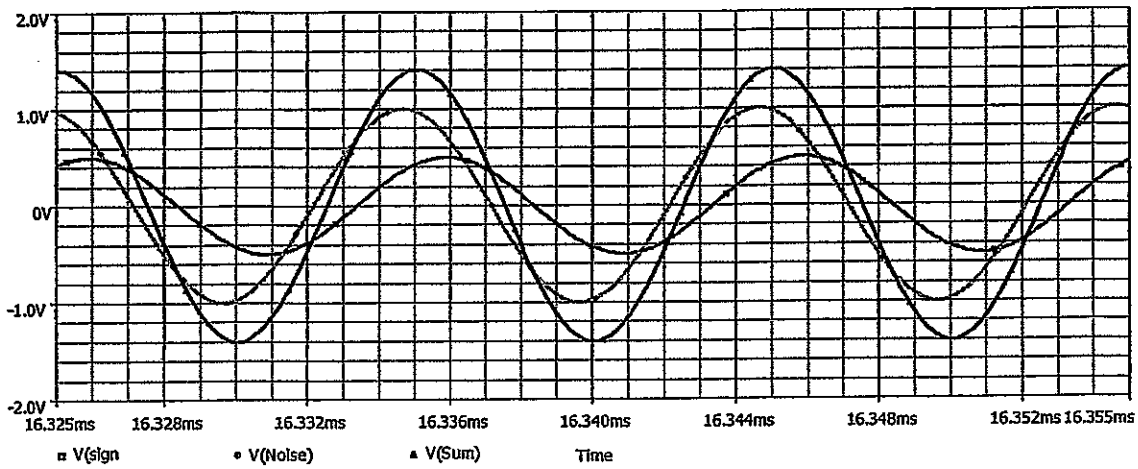
2.0V
1.0V
0V
-1.0V
-2.0V
16.325ms
16.328ms
16.332ms
16.336ms
16.340ms
16.344ms
16.348ms
16.352ms
16.355ms
V(sign
V(Noise)
V(Sum)
Time

Figure 11

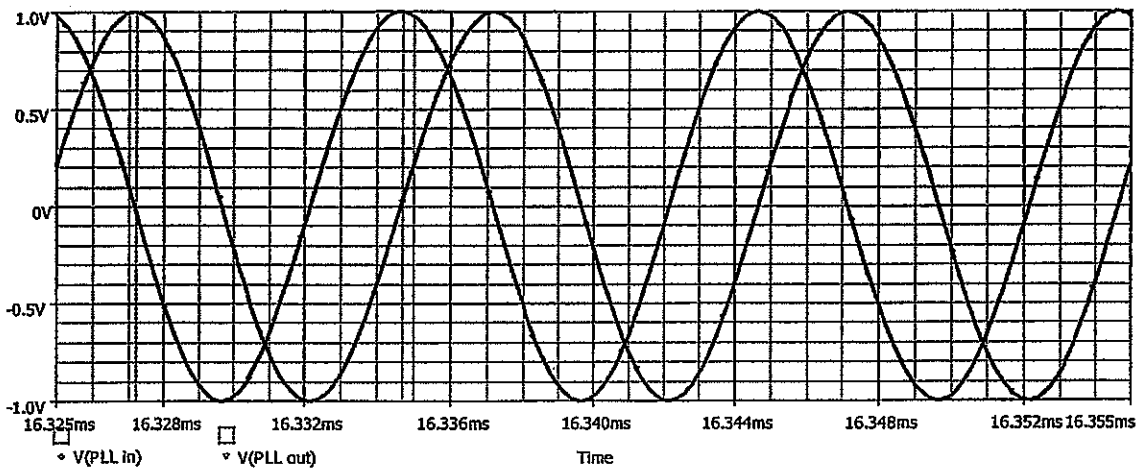
1.0V
0.5V
0V
-0.5V
-1.0V
16.325ms
16.328ms
16.332ms
16.336ms
16.340ms
16.344ms
16.348ms
16.352ms
16.355ms
V(PLL in)
V(PLL out)
Time

Figure 12

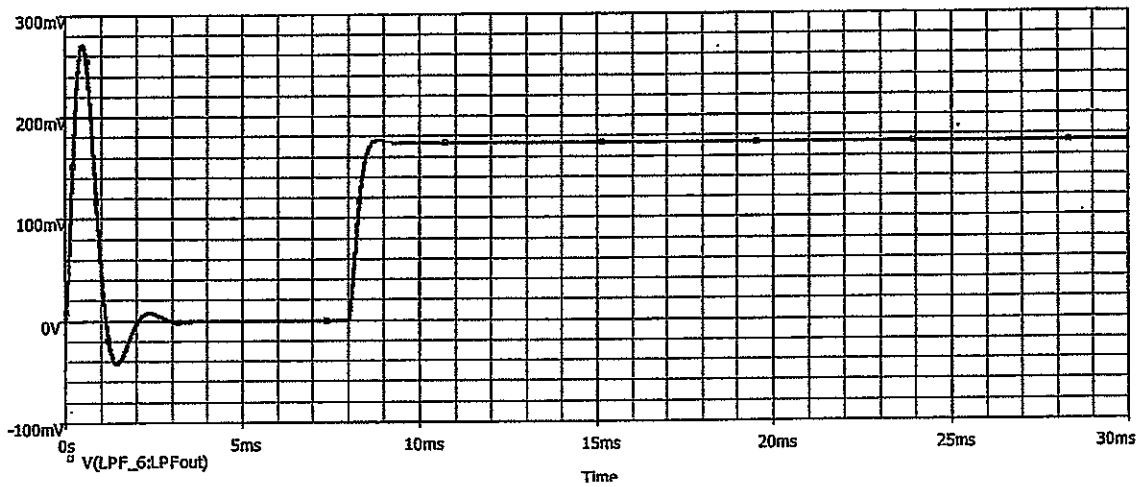
300mV
200mV
100mV
0V
-100mV
0s
5ms
10ms
15ms
20ms
25ms
30ms
V(LPF_6:LPFout)
Time

Figure 13

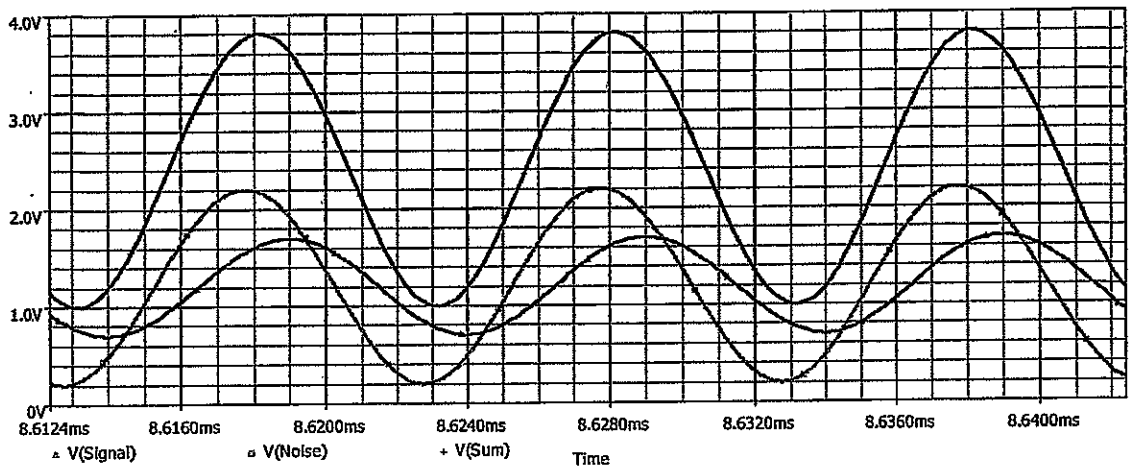
4.0V
3.0V
2.0V
1.0V
0V
8.6124ms
8.6160ms
8.6200ms
8.6240ms
8.6280ms
8.6320ms
8.6360ms
8.6400ms
V(Signal)
V(Noise)
V(Sum)
Time

Figure 14

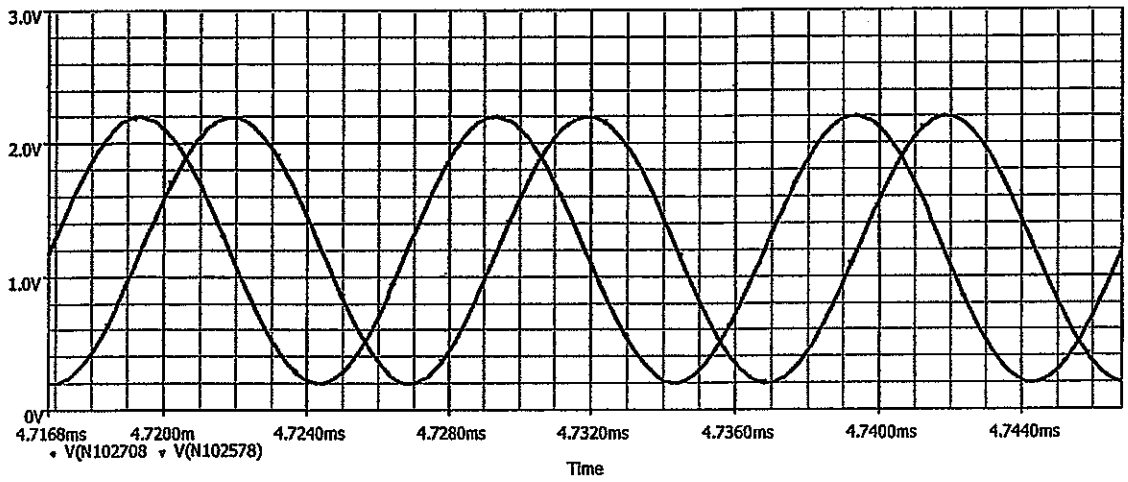
3.0V
2.0V
1.0V
0V
4.7168ms
4.7200m
4.7240ms
4.7280ms
4.7320ms
4.7360ms
4.7400ms
4.7440ms
V(N102708)
V(N102578)
Time

Figure 15

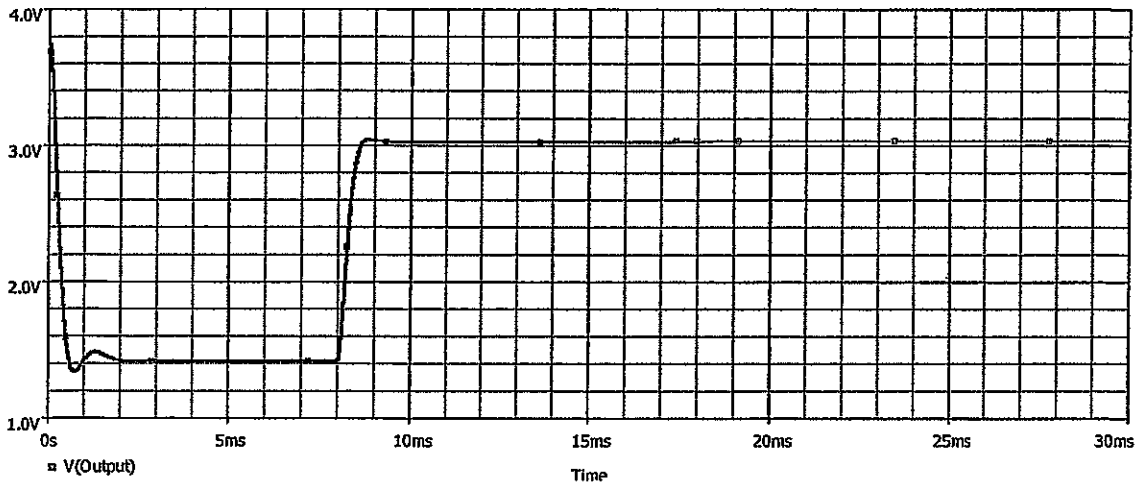

Figure 16

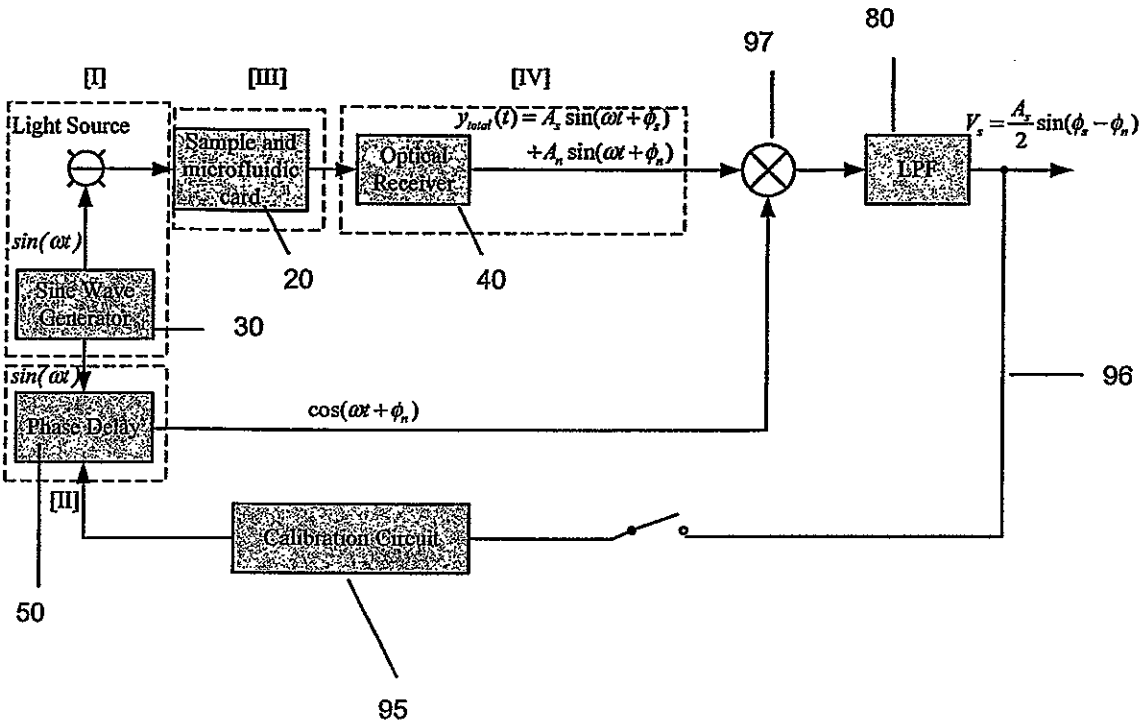
[I]
[III]
[IV]
Light Source
Sample and microfluidic card
Optical Receiver
$y_{total}(t) = A_s \sin(\omega t + \phi_s)$
$+A_n \sin(\omega t + \phi_n)$
97
80
LPF
$V_s = \frac{A_s}{2}\sin(\phi_s - \phi_n)$
$\sin(\omega t)$
Sine Wave Generator
20
40
30
$\sin(\omega t)$
Phase Delay
$\cos(\omega t + \phi_n)$
96
[II]
Calibration Circuit
50
95

Figure 17

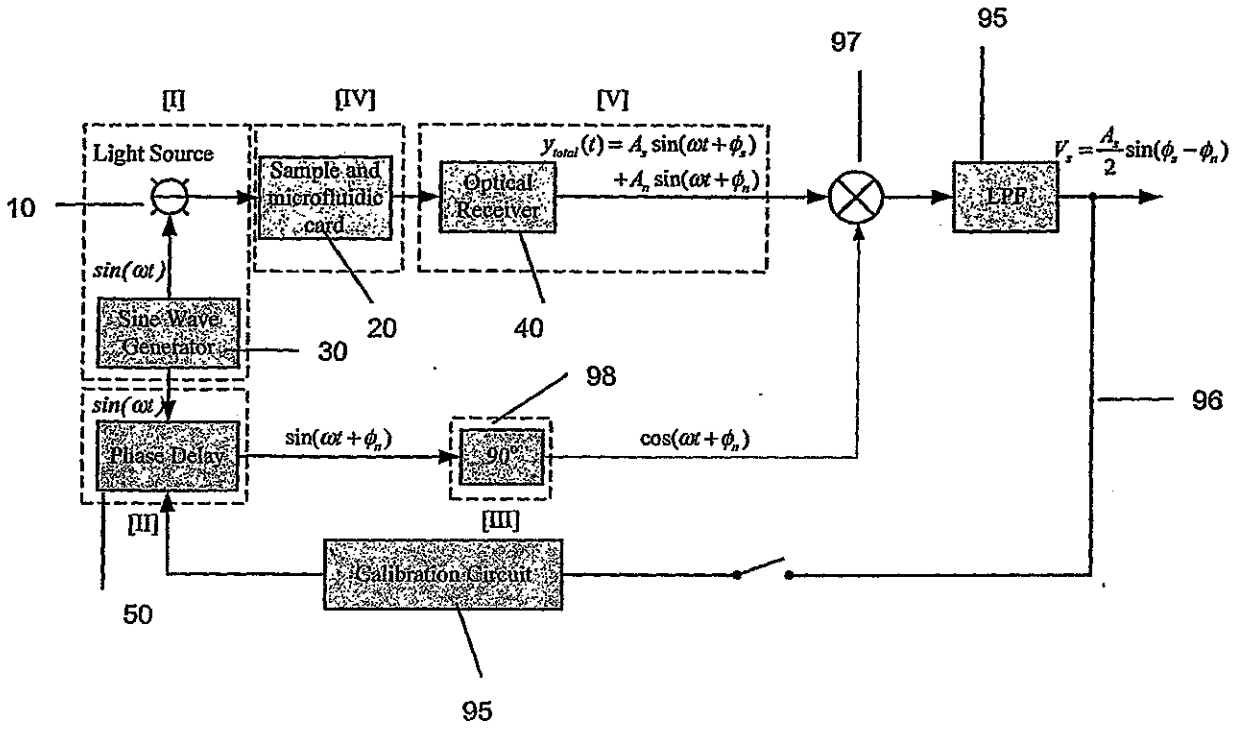
[I]
[IV]
[V]
Light Source
Sample and microfluidic card
Optical Receiver
$y_{total}(t) = A_s \sin(\omega t + \phi_s) + A_n \sin(\omega t + \phi_n)$
$V_s = \frac{A_s}{2} \sin(\phi_s - \phi_n)$
10
97
95
LPF
$sin(\omega t)$
Sine Wave Generator
20
40
30
98
96
$sin(\omega t)$
Phase Delay
$\sin(\omega t + \phi_n)$
90°
$\cos(\omega t + \phi_n)$
[II]
[III]
Calibration Circuit
50
95

Figure 18