REPLACEMENT SHEET
Date : 27 MAY 2005

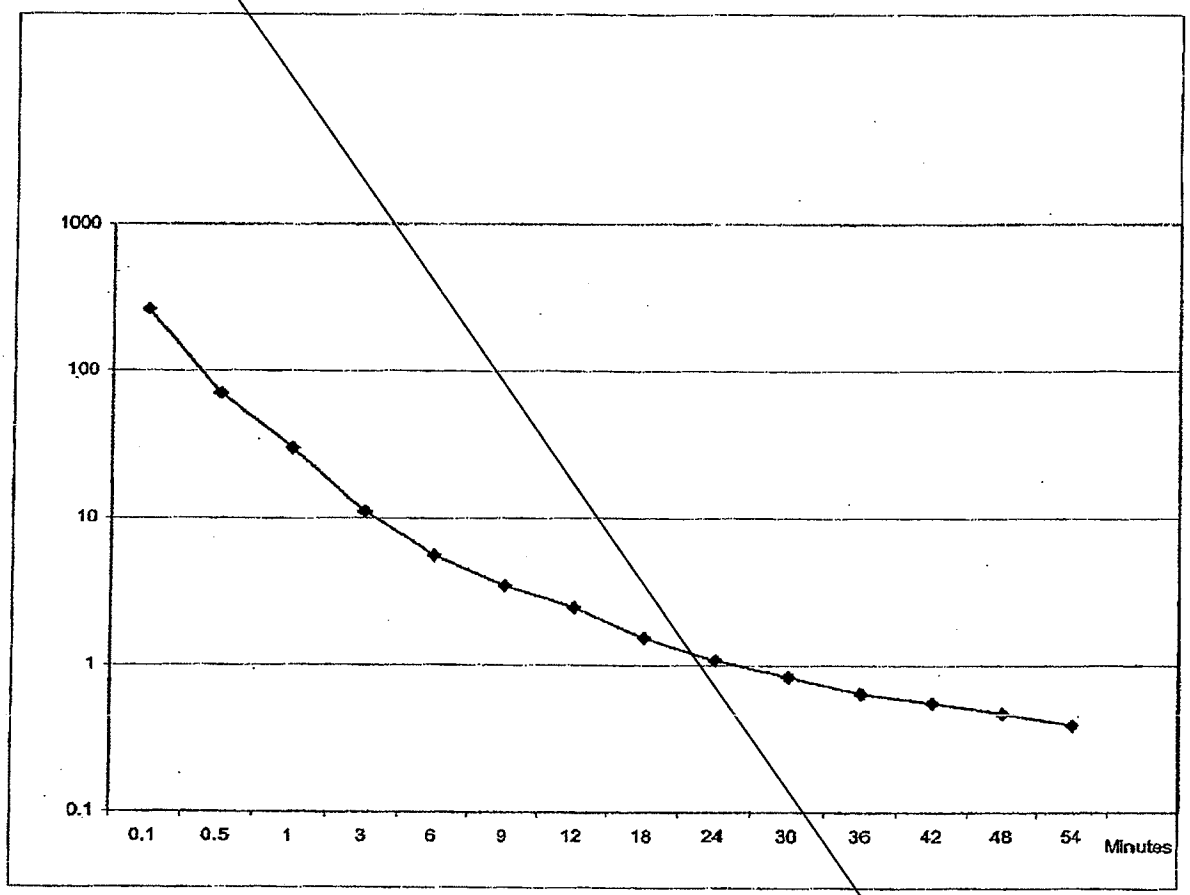

FIG. 1

REPLACEMENT SHEET
27 MAY 2005
Date :

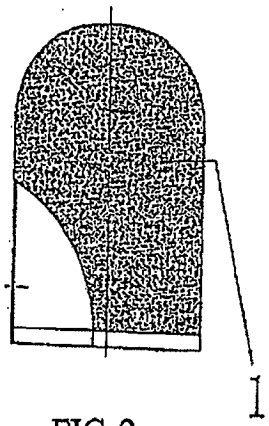

FIG. 2a

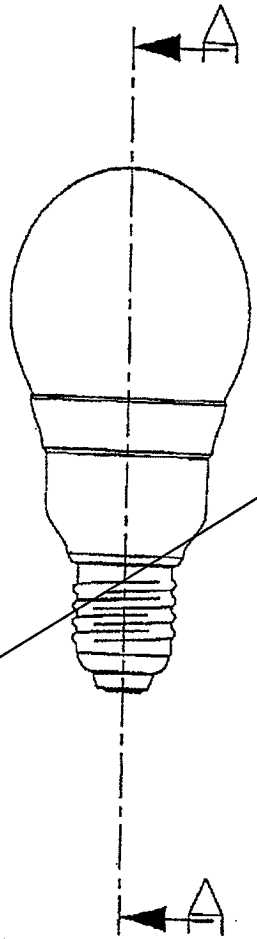

FIG. 2b

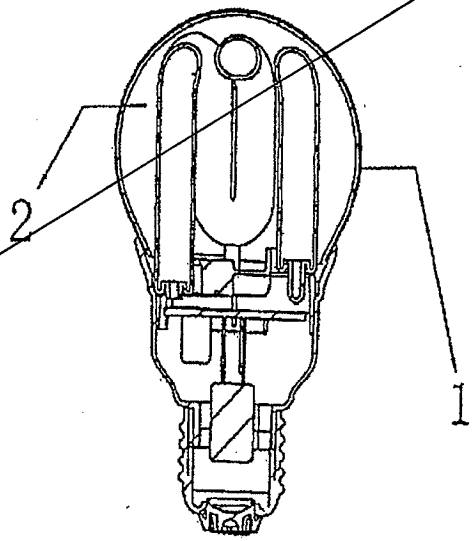

FIG. 2c

REPLACEMENT SHEET
27 MAY 2005
Date : .....

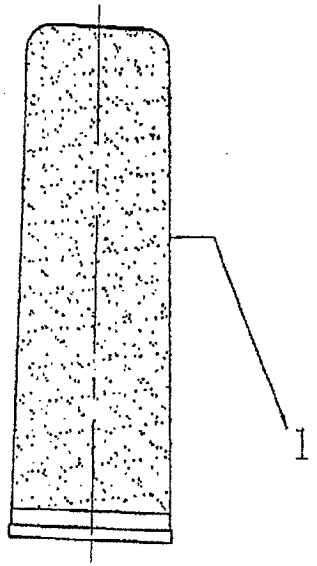

FIG. 3a

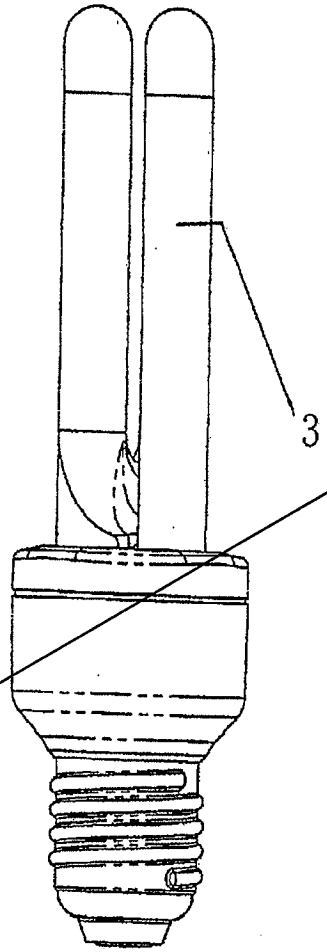

FIG. 3b

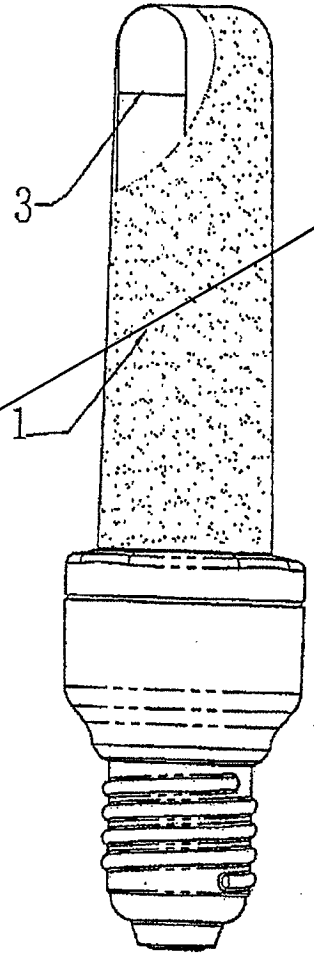

FIG. 3c

REPLACEMENT SHEET
17 MAY 2005
Date : .....

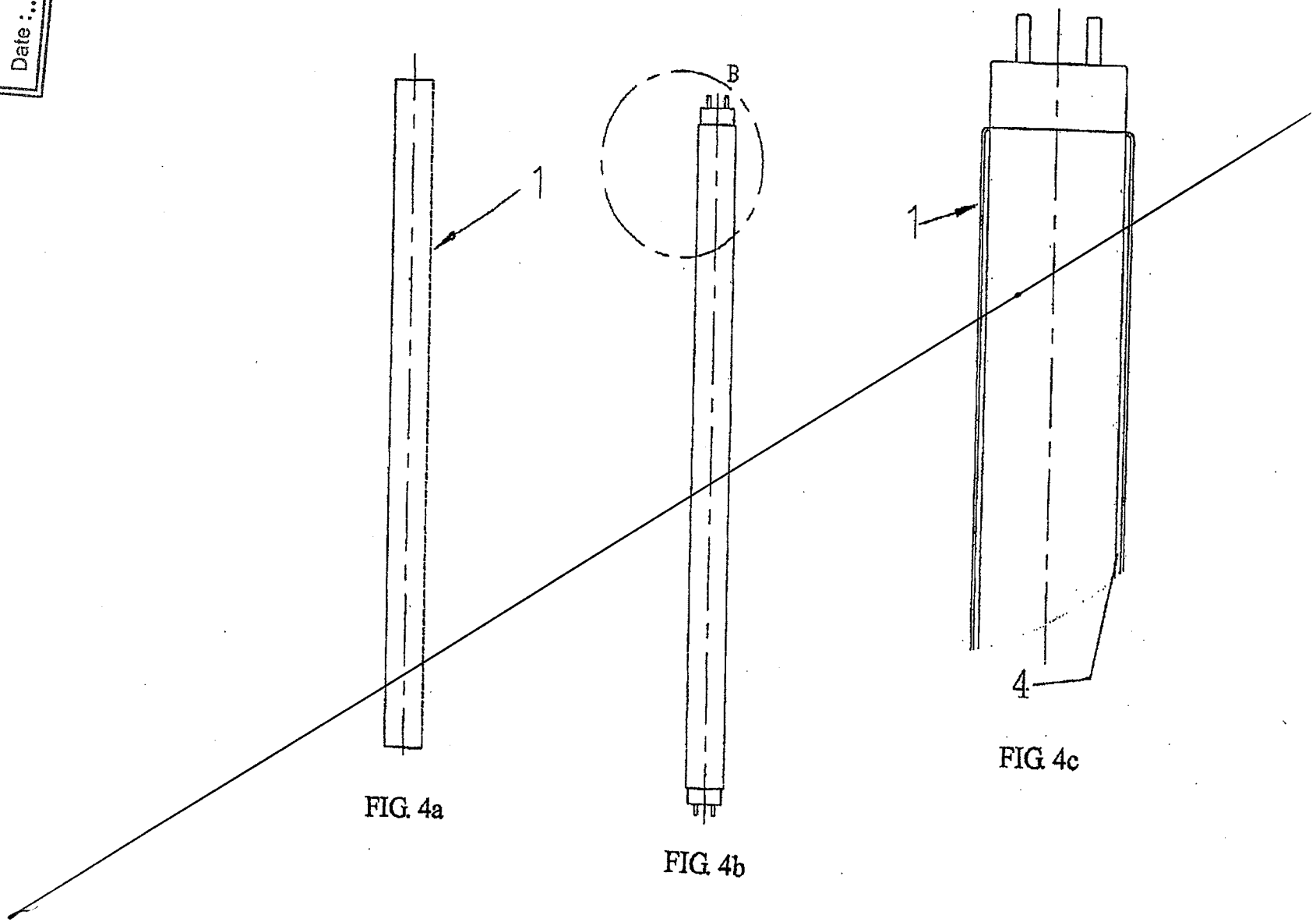

FIG. 4a

FIG. 4b

FIG. 4c

REPLACEMENT SHEET
27 MAY 2005
Date :.....

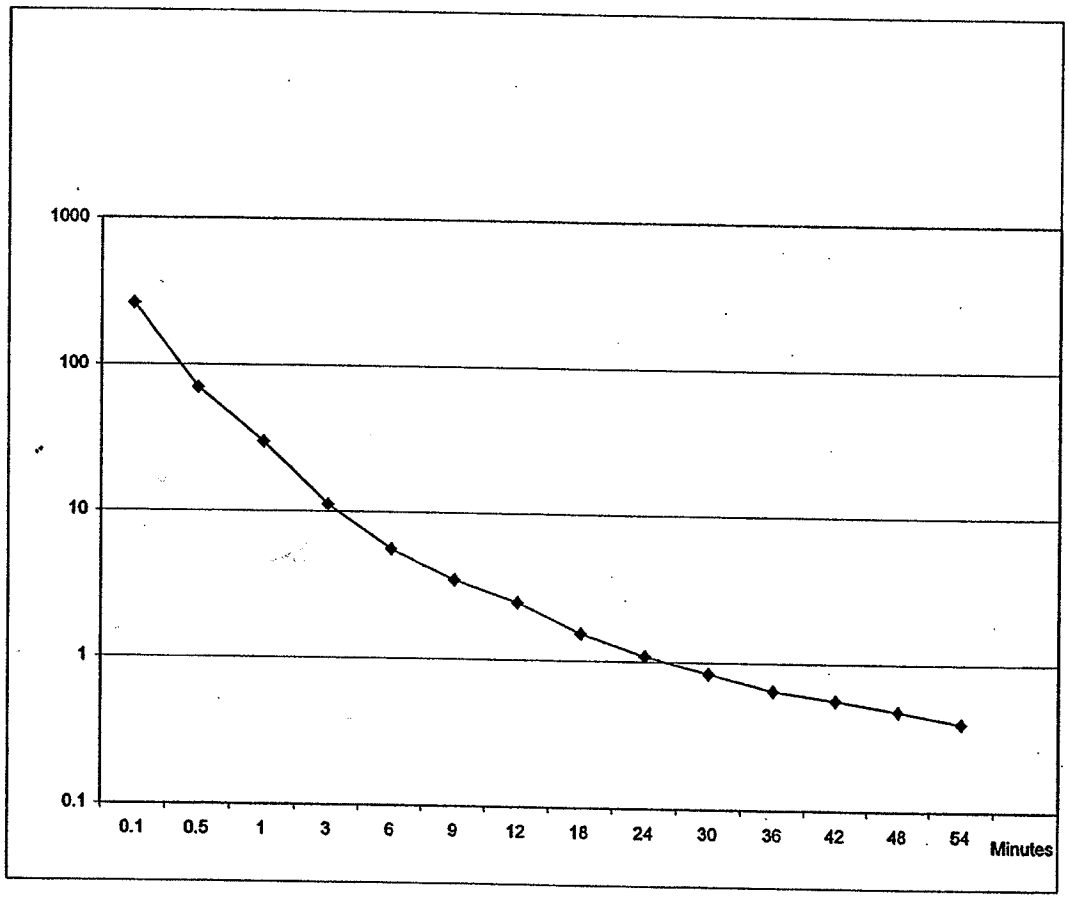

FIG. 1

REPLACEMENT SHEET
27 MAY 2005
Date :.....

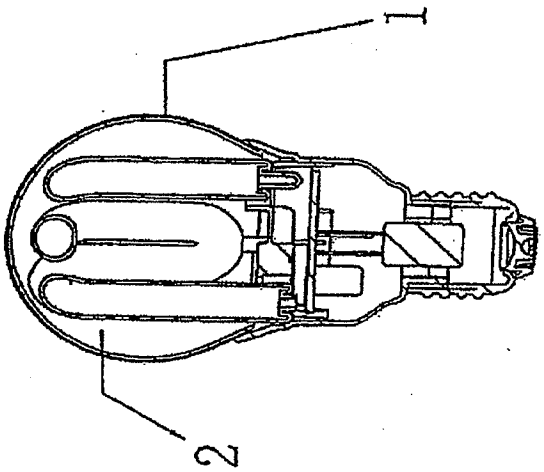

FIG. 2c

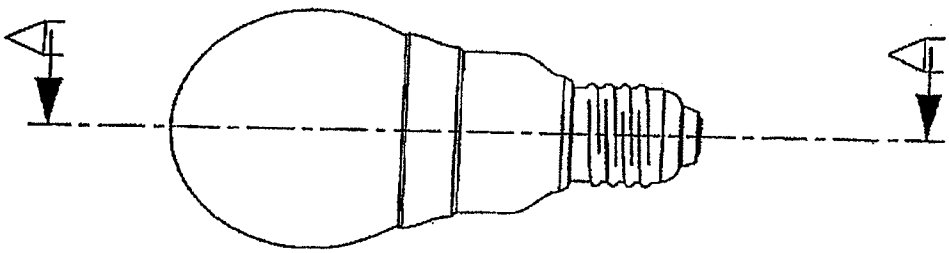

FIG. 2b

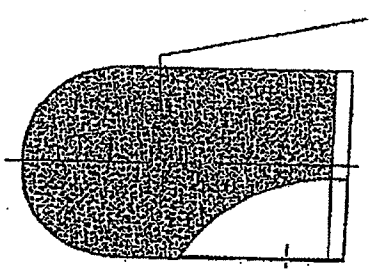

FIG. 2a

REPLACEMENT SHEET
27 MAY 2005
Date :.....

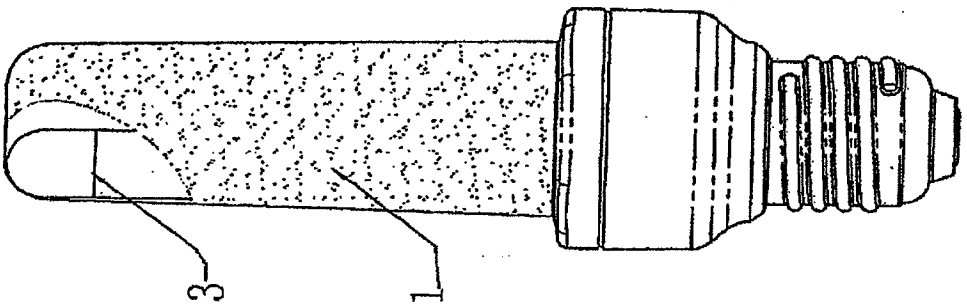

FIG 3c

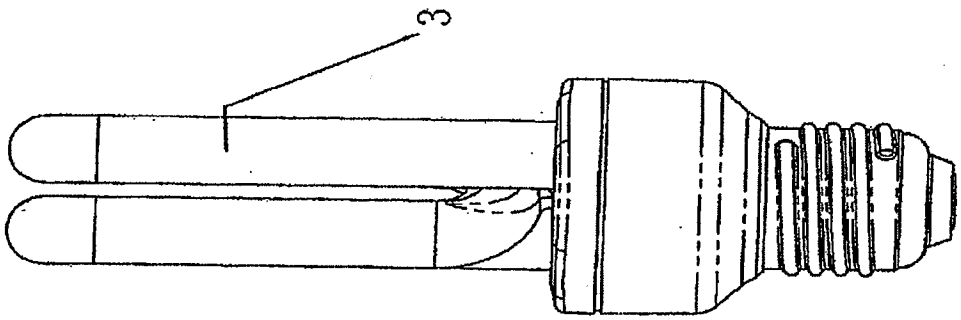

FIG 3b

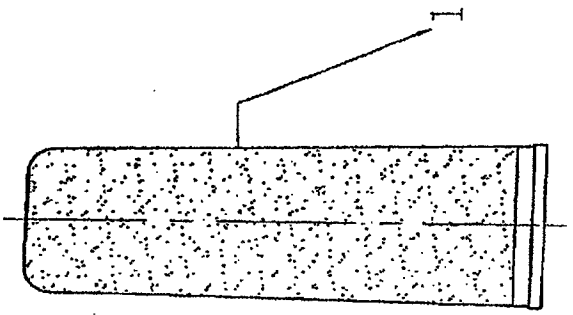

FIG 3a

REPLACEMENT SHEET
27 MAY 2005
Date :.....

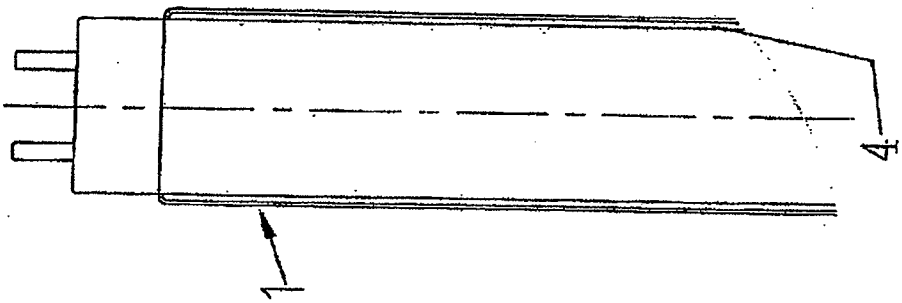

FIG 4c

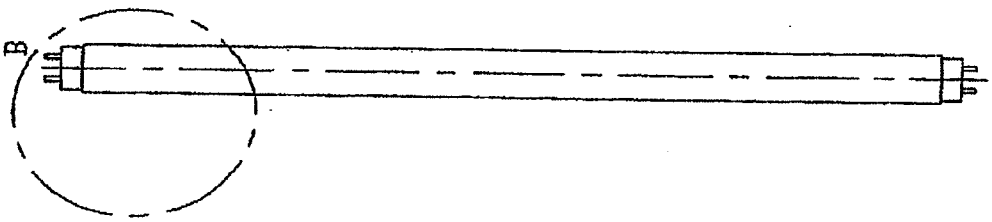

FIG 4b

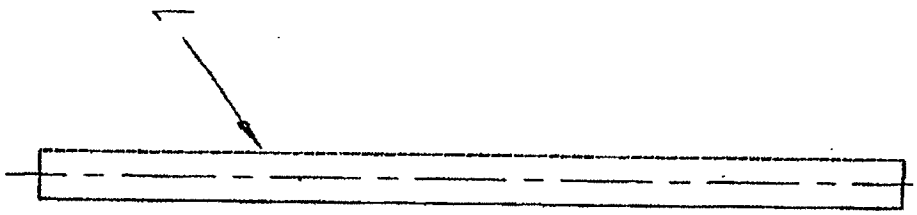

FIG 4a