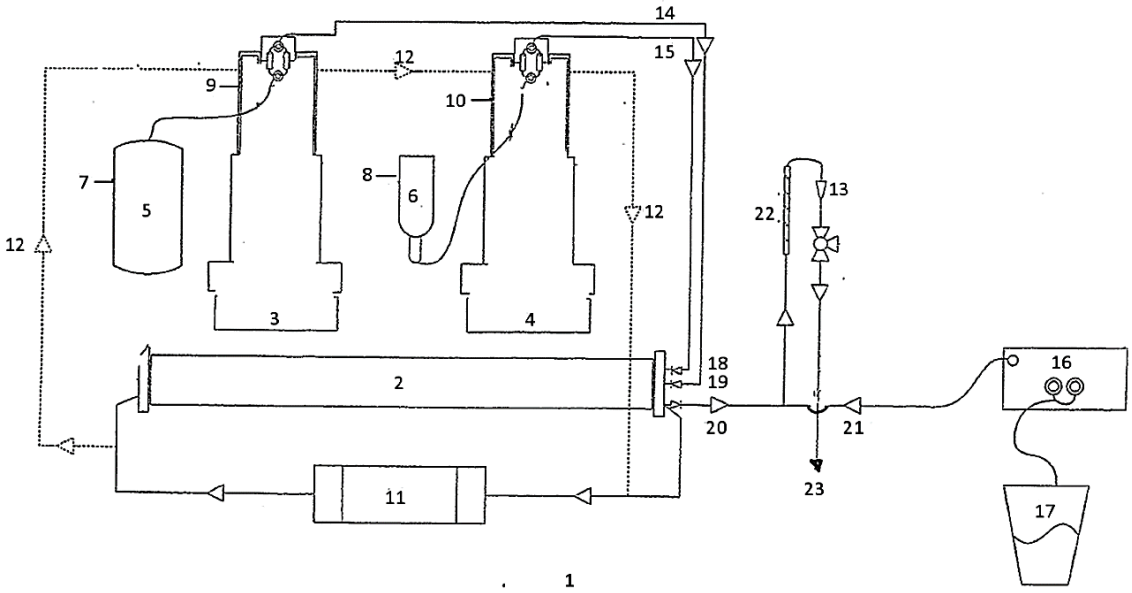

Figure 1

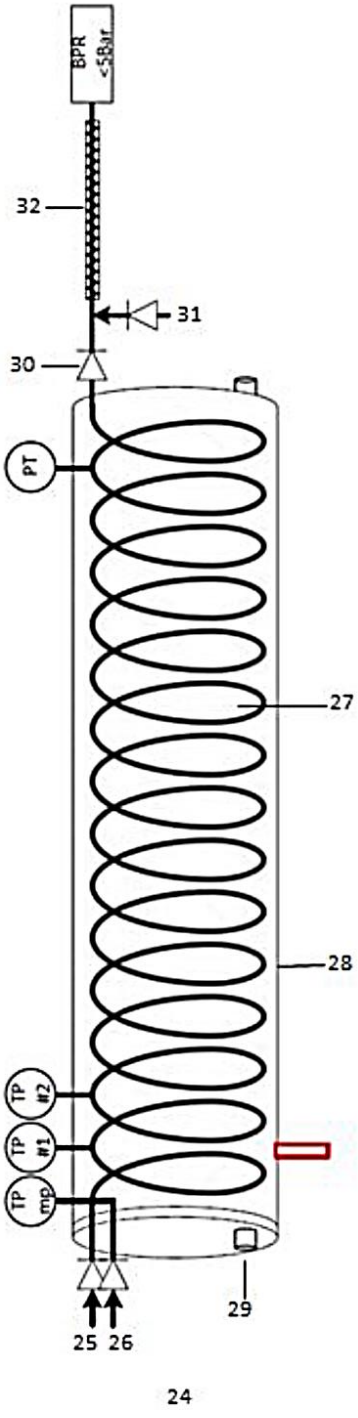

Figure 2

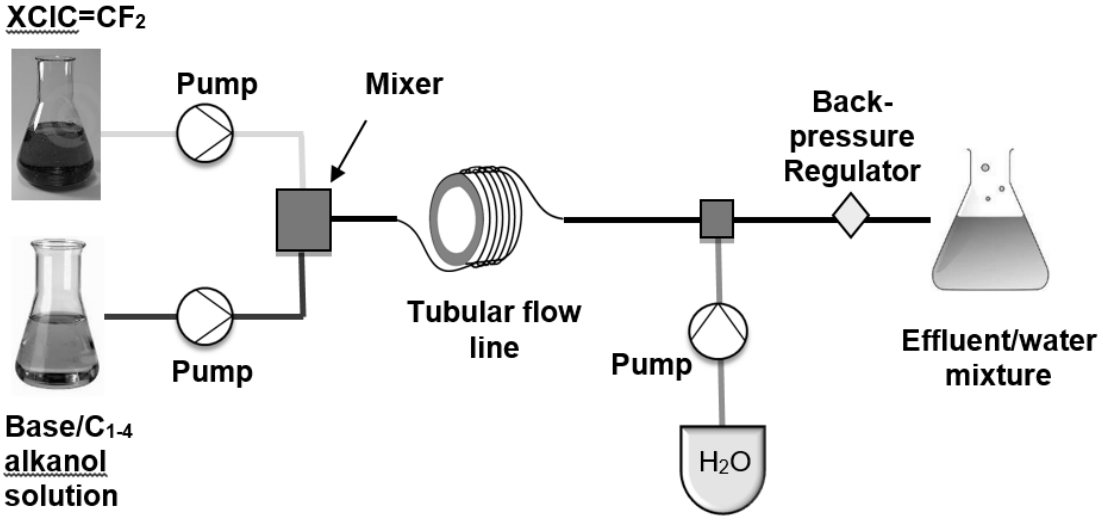
XClC=CF2
Pump
Mixer
Back-
pressure
Regulator
Tubular flow
line
Pump
Pump
Effluent/water
mixture
Base/C1-4
alkanol
solution
H2O

Figure 3

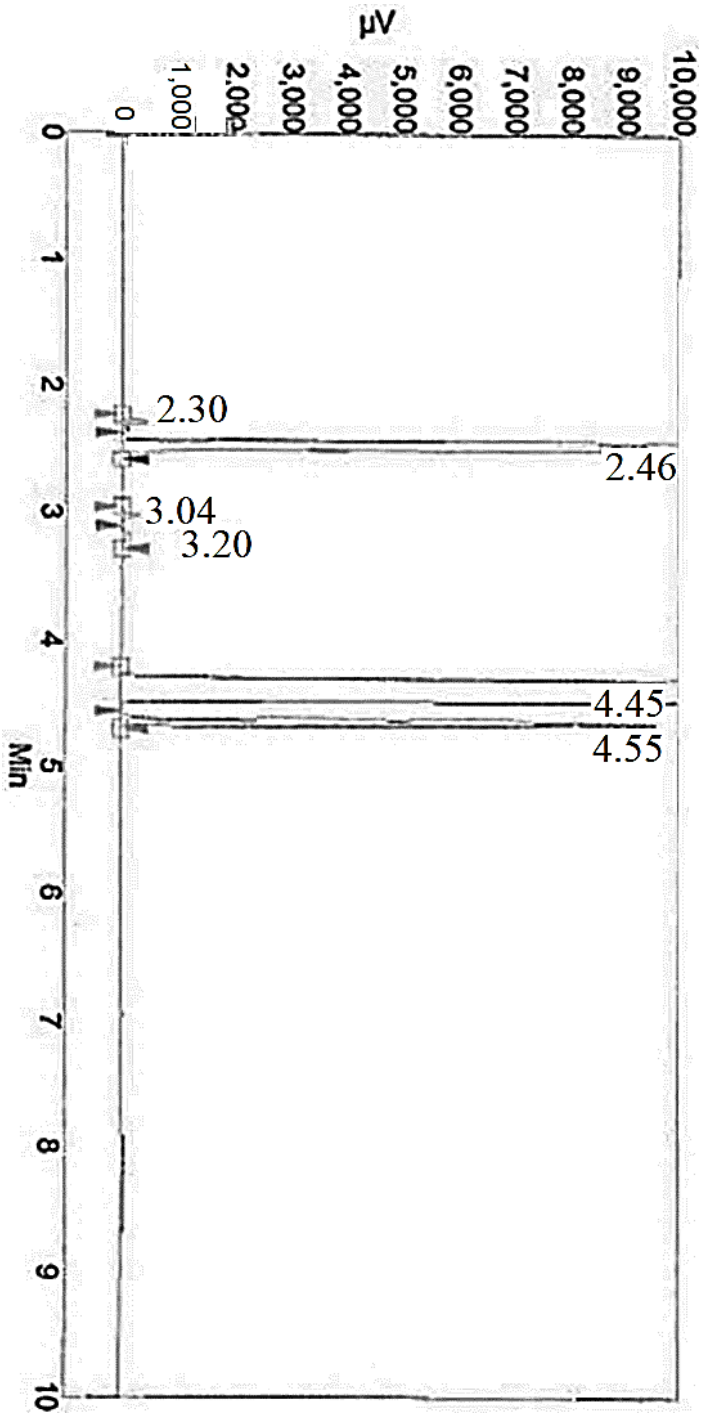
μV
0
1,000
2,000
3,000
4,000
5,000
6,000
7,000
8,000
9,000
10,000
Min
0
1
2
3
4
5
6
7
8
9
10
2.30
2.46
3.04
3.20
4.45
4.55

Figure 4

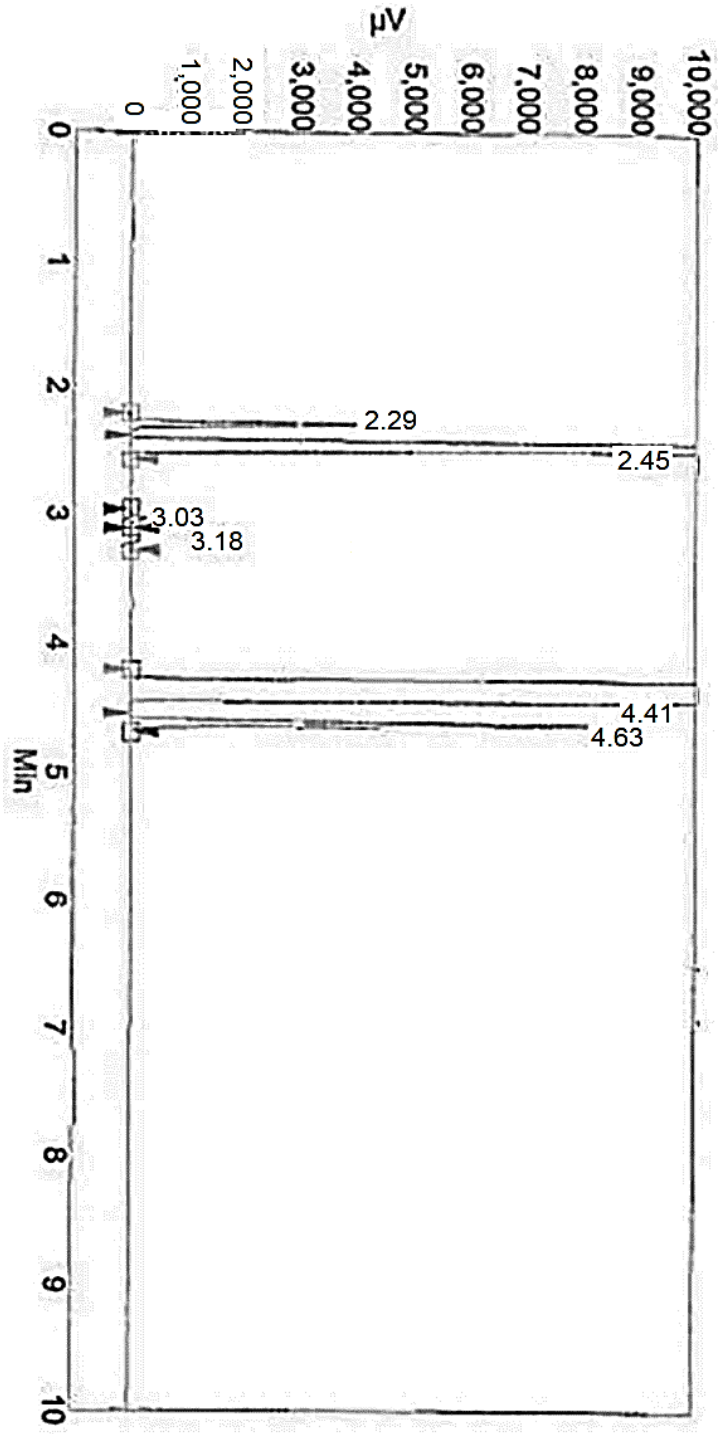
μV
0
1,000
2,000
3,000
4,000
5,000
6,000
7,000
8,000
9,000
10,000
Min
0
1
2
3
4
5
6
7
8
9
10
2.29
2.45
3.03
3.18
4.41
4.63

Figure 5

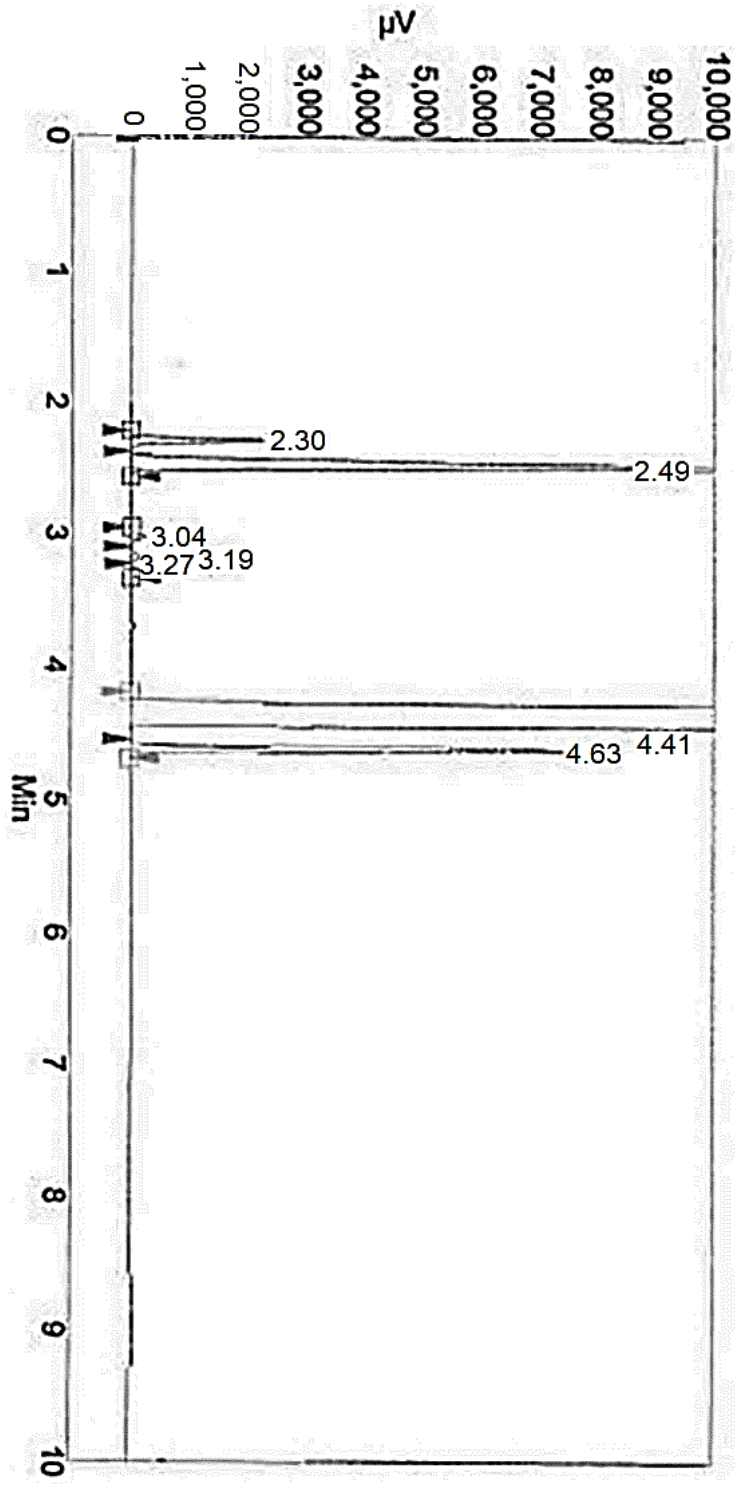
μV
0
1,000
2,000
3,000
4,000
5,000
6,000
7,000
8,000
9,000
10,000
Min
0
1
2
3
4
5
6
7
8
9
10
2.30
2.49
3.04
3.27
3.19
4.63
4.41

Figure 6