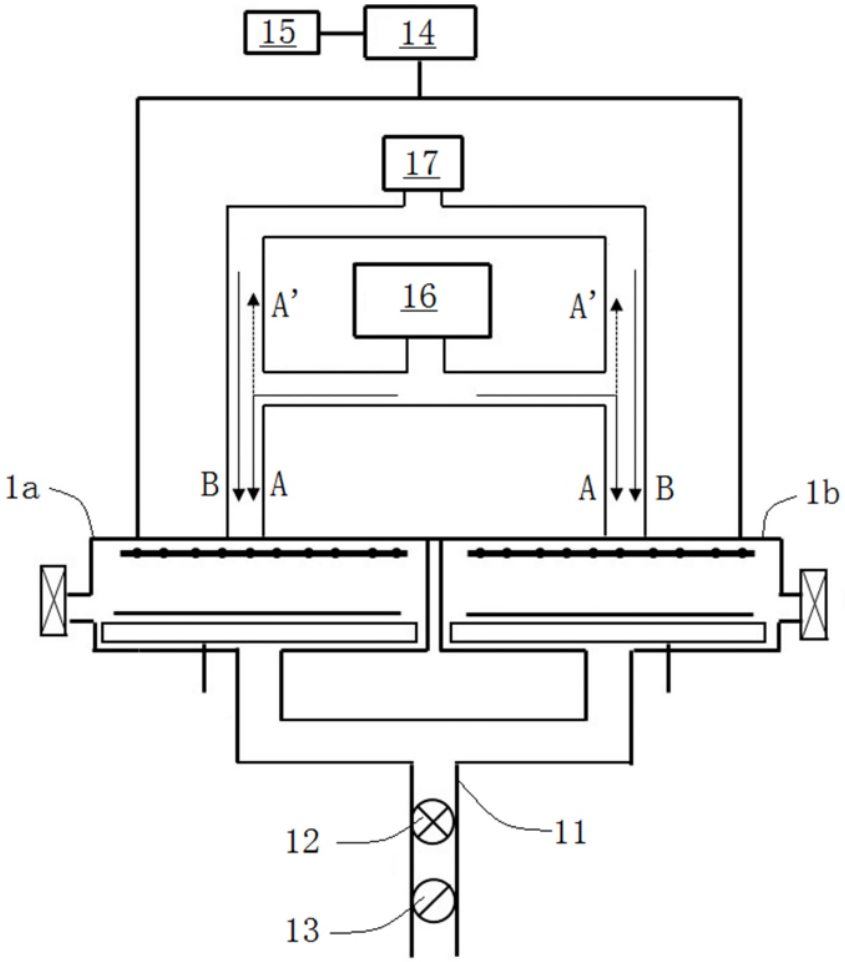

FIG. 1A

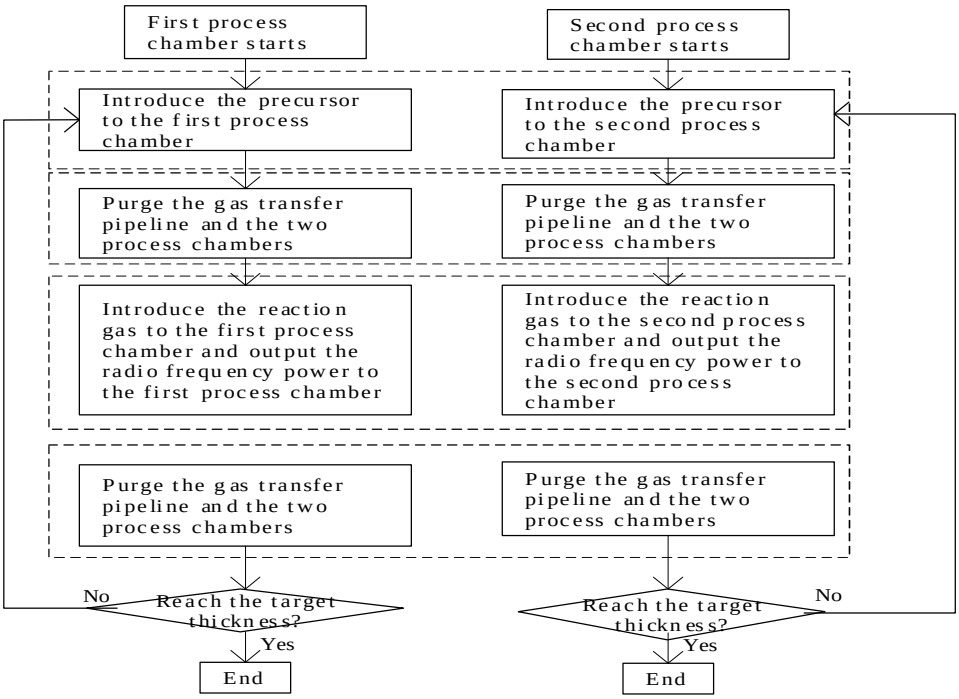
First process chamber starts
Second process chamber starts
Introduce the precursor to the first process chamber
Introduce the precursor to the second process chamber
Purge the gas transfer pipeline and the two process chambers
Purge the gas transfer pipeline and the two process chambers
Introduce the reaction gas to the first process chamber and output the radio frequency power to the first process chamber
Introduce the reaction gas to the second process chamber and output the radio frequency power to the second process chamber
Purge the gas transfer pipeline and the two process chambers
Purge the gas transfer pipeline and the two process chambers
No
Reach the target thickness?
Yes
End
Reach the target thickness?
No
Yes
End

FIG. 1B

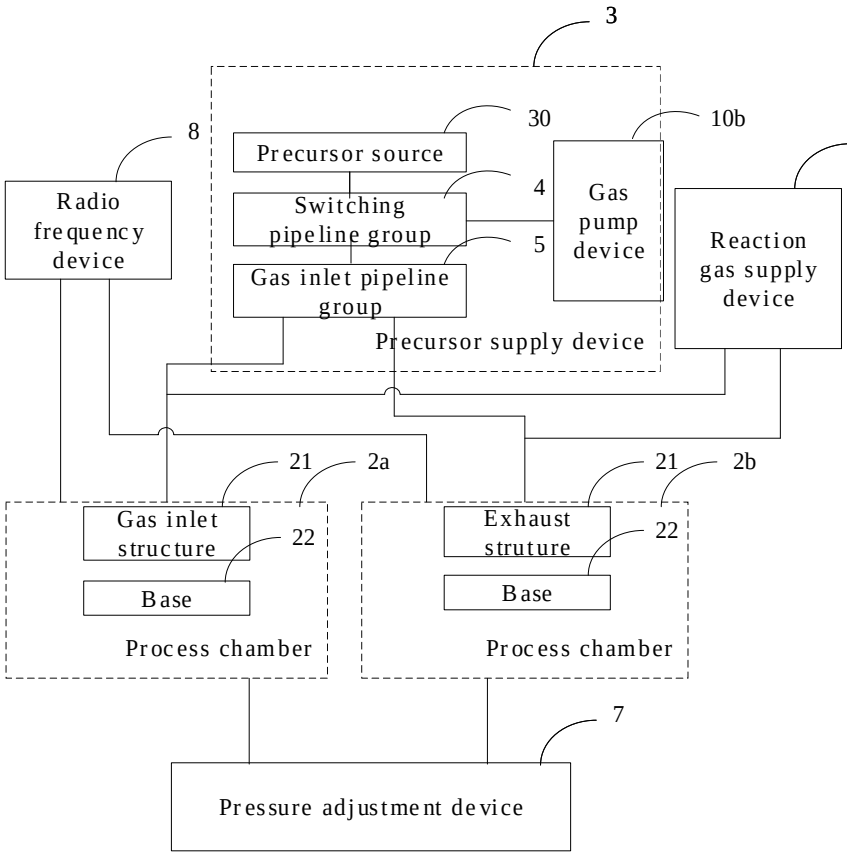
3
30
10b
8
Precursor source
4
Switching pipeline group
5
Gas inlet pipeline group
Gas pump device
Reaction gas supply device
Radio frequency device
Precursor supply device
21
2a
21
2b
Gas inlet structure
22
Exhaust struture
22
Base
Base
Process chamber
Process chamber
7
Pressure adjustment device

FIG. 2

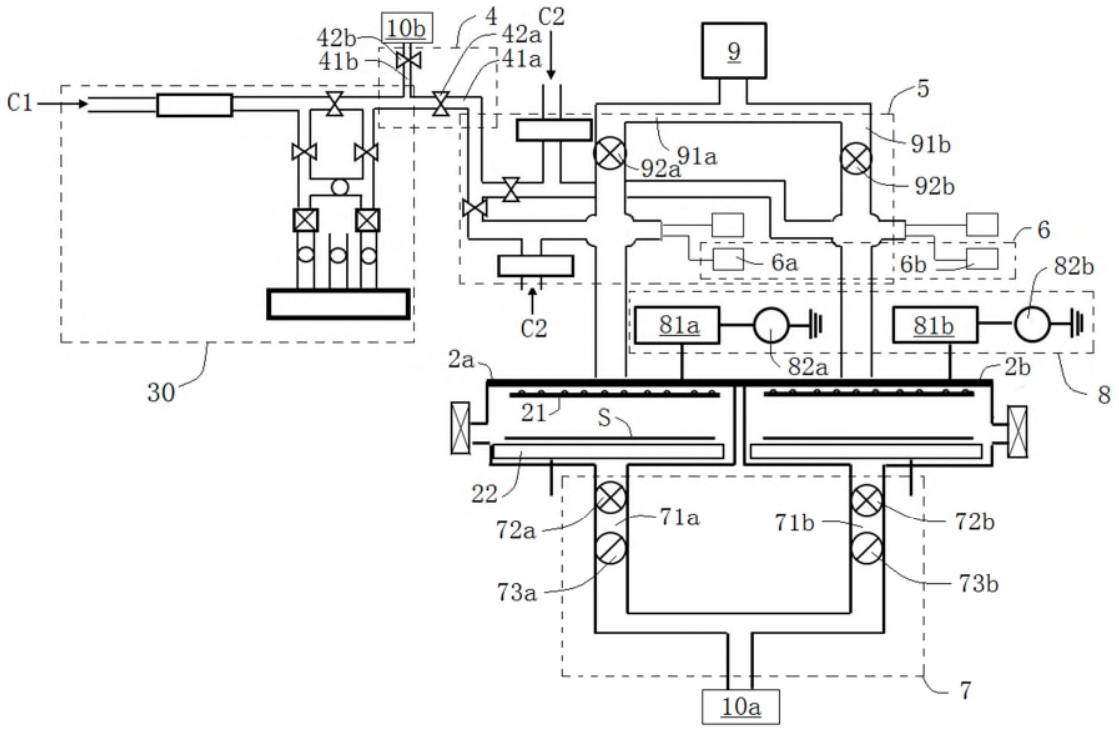
C1
42b
41b
10b
4
42a
41a
C2
9
5
91a
91b
92a
92b
6
6a
6b
82b
C2
81a
81b
82a
30
2a
2b
8
21
S
22
72a
71a
71b
72b
73a
73b
7
10a

FIG. 3

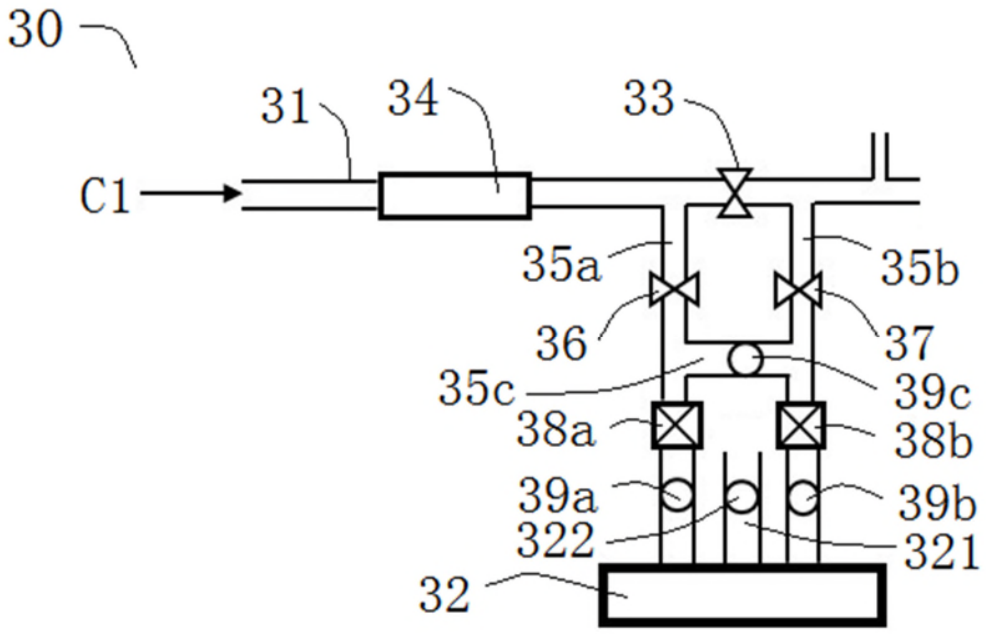

FIG. 4

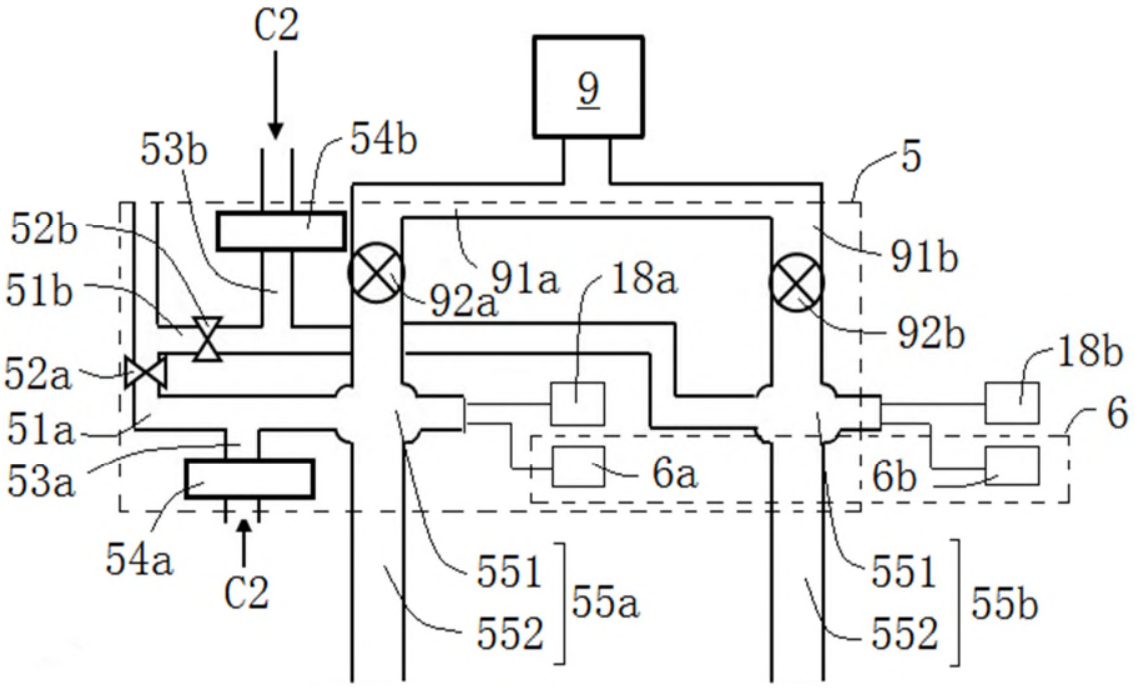
C2
9
53b
54b
5
52b
91b
51b
91a
18a
92a
92b
18b
52a
6
51a
6a
6b
53a
54a
C2
551
552
55a
551
552
55b

FIG. 5

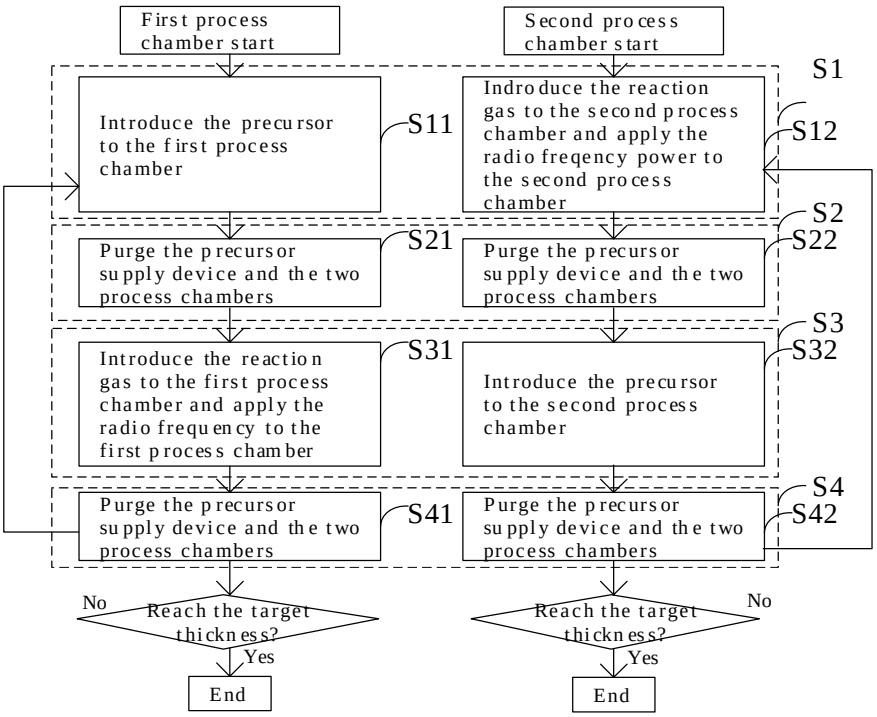
First process chamber start
Second process chamber start
S1
Introduce the precursor to the first process chamber
S11
Indroduce the reaction gas to the second process chamber and apply the radio freqency power to the second process chamber
S12
S2
Purge the precursor supply device and the two process chambers
S21
Purge the precursor supply device and the two process chambers
S22
S3
Introduce the reaction gas to the first process chamber and apply the radio frequency to the first process chamber
S31
Introduce the precursor to the second process chamber
S32
S4
Purge the precursor supply device and the two process chambers
S41
Purge the precursor supply device and the two process chambers
S42
No
Reach the target thickness?
Yes
End
No
Reach the target thickness?
Yes
End

FIG. 6

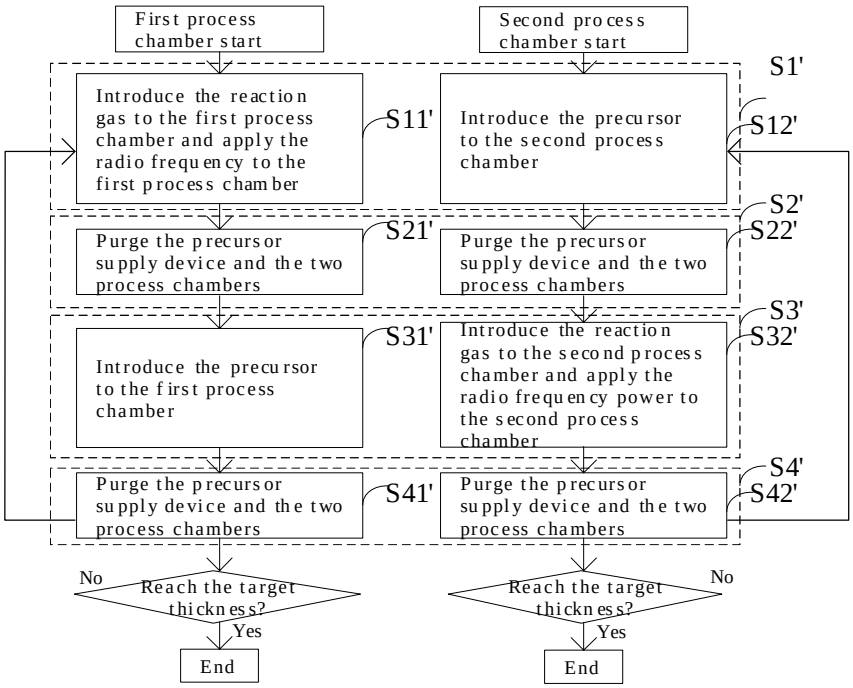
First process chamber start
Second process chamber start
S1'
Introduce the reaction gas to the first process chamber and apply the radio frequency to the first process chamber
S11'
Introduce the precursor to the second process chamber
S12'
S2'
Purge the precursor supply device and the two process chambers
S21'
Purge the precursor supply device and the two process chambers
S22'
S3'
Introduce the precursor to the first process chamber
S31'
Introduce the reaction gas to the second process chamber and apply the radio frequency power to the second process chamber
S32'
S4'
Purge the precursor supply device and the two process chambers
S41'
Purge the precursor supply device and the two process chambers
S42'
No
Reach the target thickness?
Yes
End
No
Reach the target thickness?
Yes
End

FIG. 7