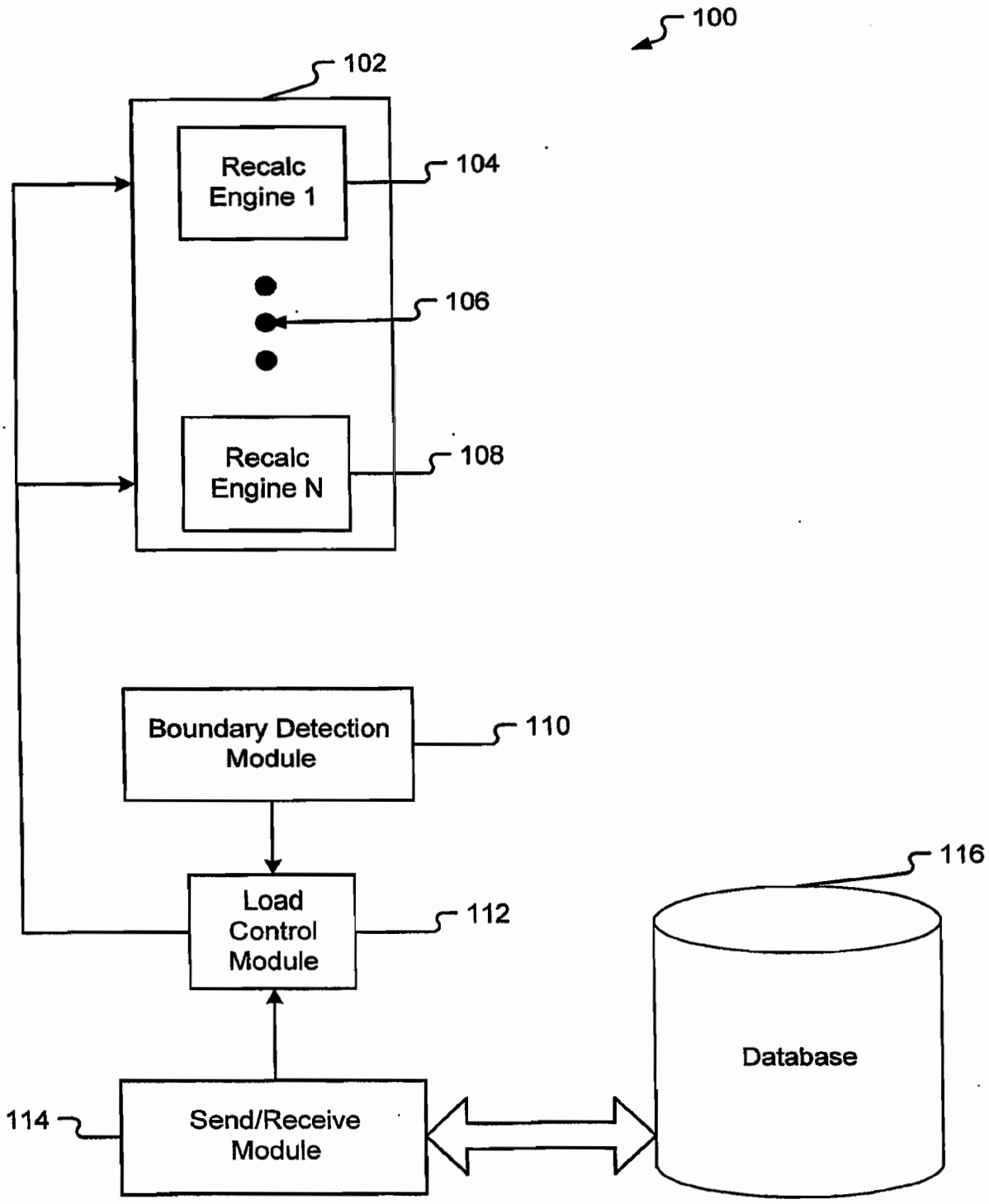
100
102
Recalc Engine 1
104
106
Recalc Engine N
108
Boundary Detection Module
110
Load Control Module
112
116
Database
114
Send/Receive Module

Fig. 1

~~2/15~~

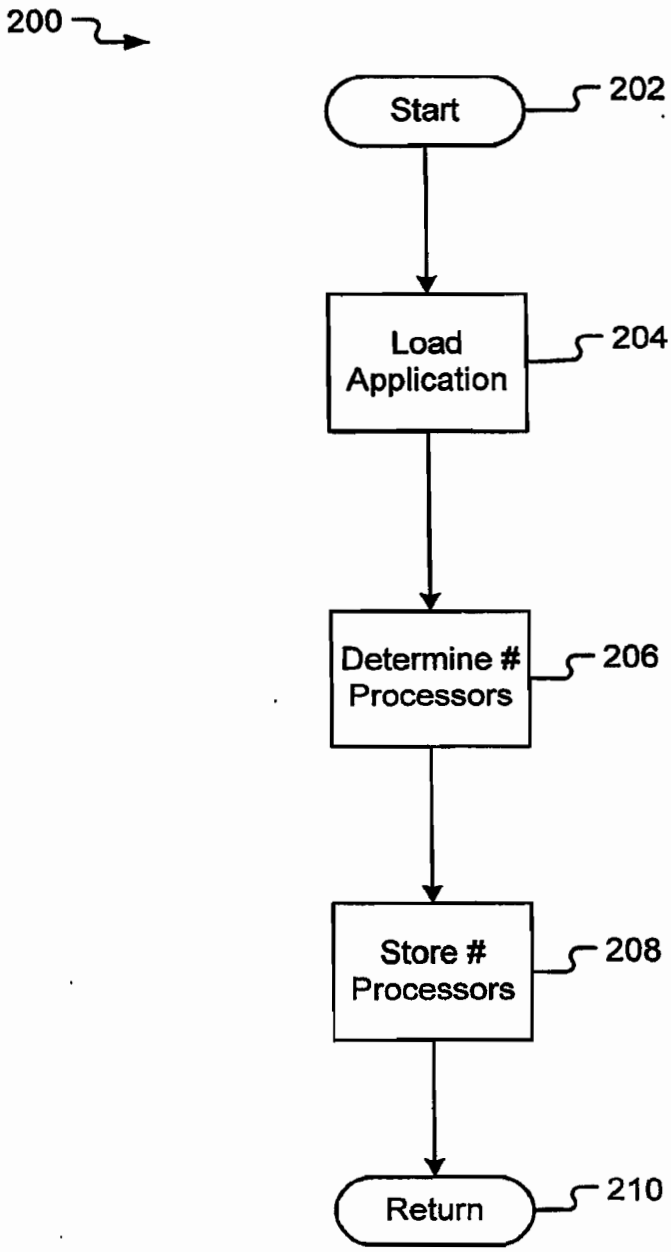
200
Start
202
Load Application
204
Determine # Processors
206
Store # Processors
208
Return
210

Fig. 2

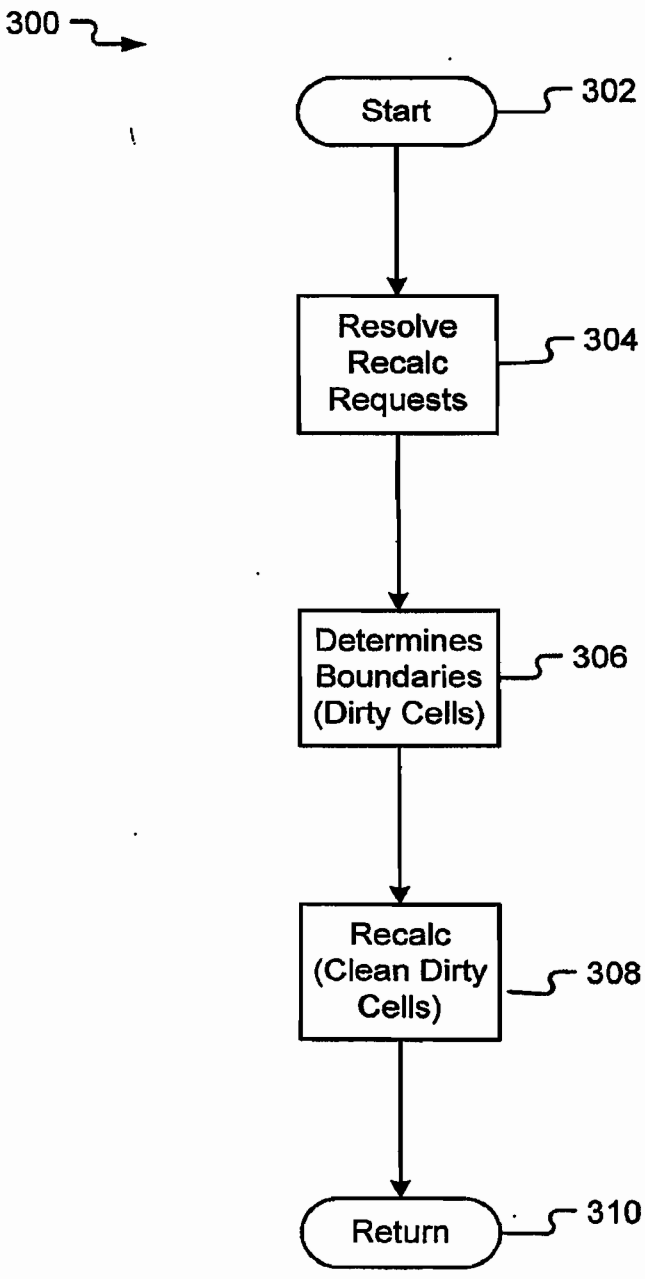
300
Start
302
Resolve Recalc Requests
304
Determines Boundaries (Dirty Cells)
306
Recalc (Clean Dirty Cells)
308
Return
310

Fig. 3

400

	A	B	C
1	=1	=1	
2	=A1	=B1	
3	=A2	=B2	=A3+B3

402 404 406

Fig. 4

500

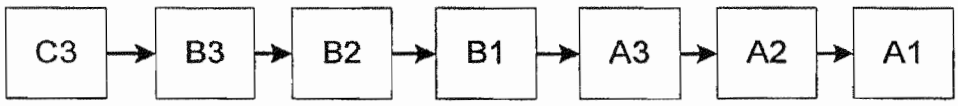

Fig. 5

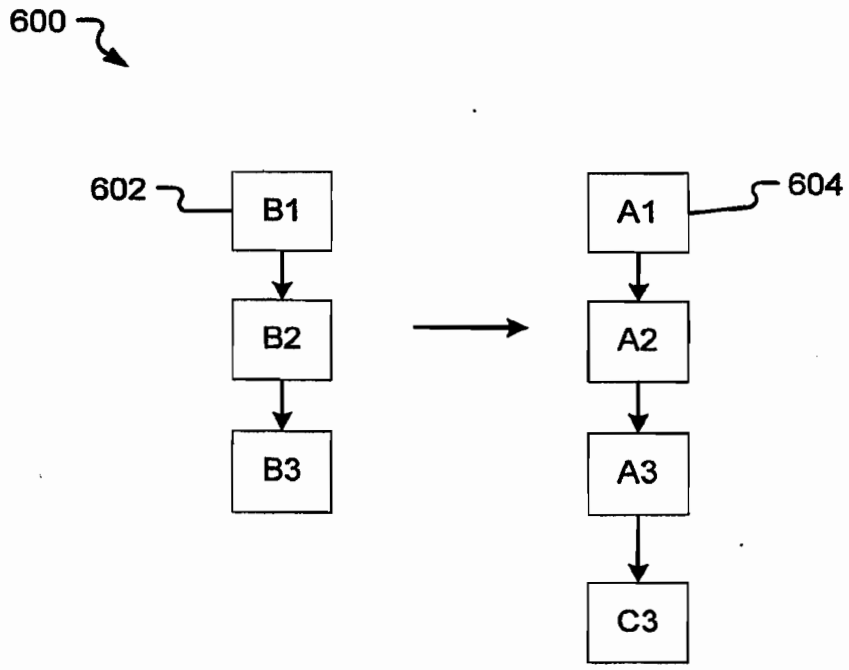

Fig. 6A

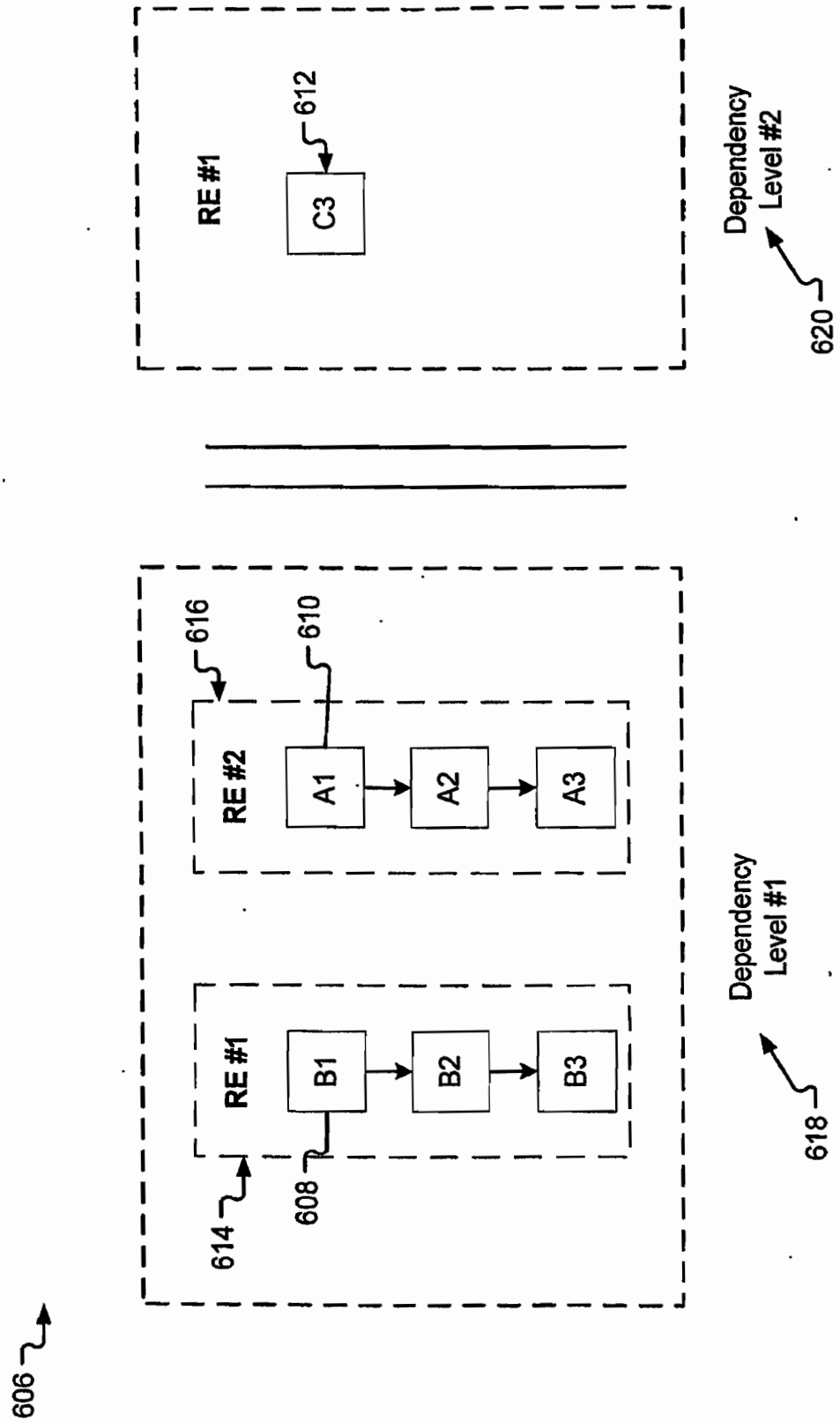
606
RE #1
C3
612
Dependency Level #2
620
RE #2
A1
A2
A3
616
610
RE #1
B1
B2
B3
608
614
Dependency Level #1
618

Fig. 6B

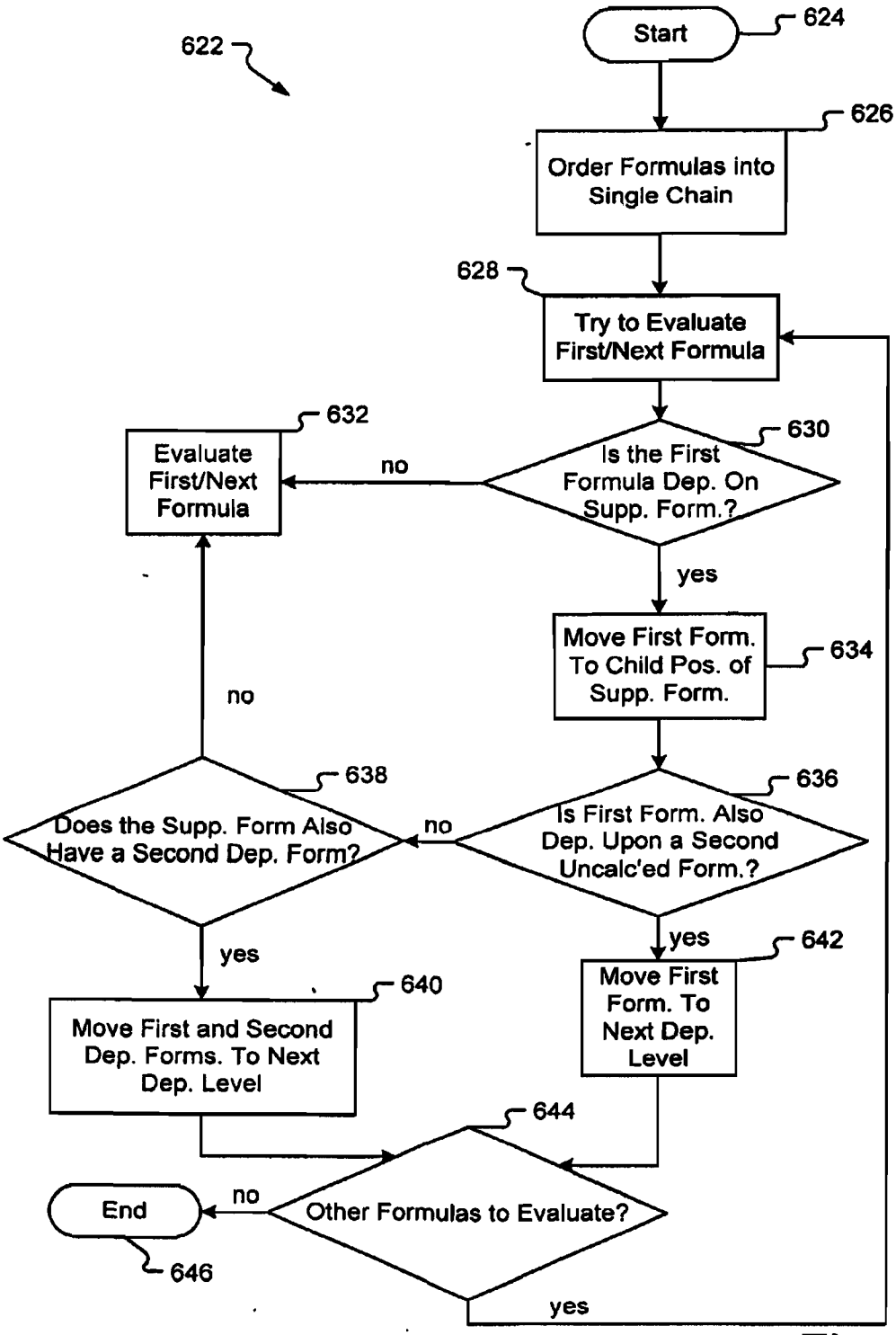
622
Start
624
Order Formulas into Single Chain
626
628
Try to Evaluate First/Next Formula
Is the First Formula Dep. On Supp. Form.?
630
no
Evaluate First/Next Formula
632
yes
Move First Form. To Child Pos. of Supp. Form.
634
Is First Form. Also Dep. Upon a Second Uncalc'ed Form.?
636
no
Does the Supp. Form Also Have a Second Dep. Form?
638
no
yes
Move First Form. To Next Dep. Level
642
yes
Move First and Second Dep. Forms. To Next Dep. Level
640
Other Formulas to Evaluate?
644
no
End
646
yes

Fig. 6C

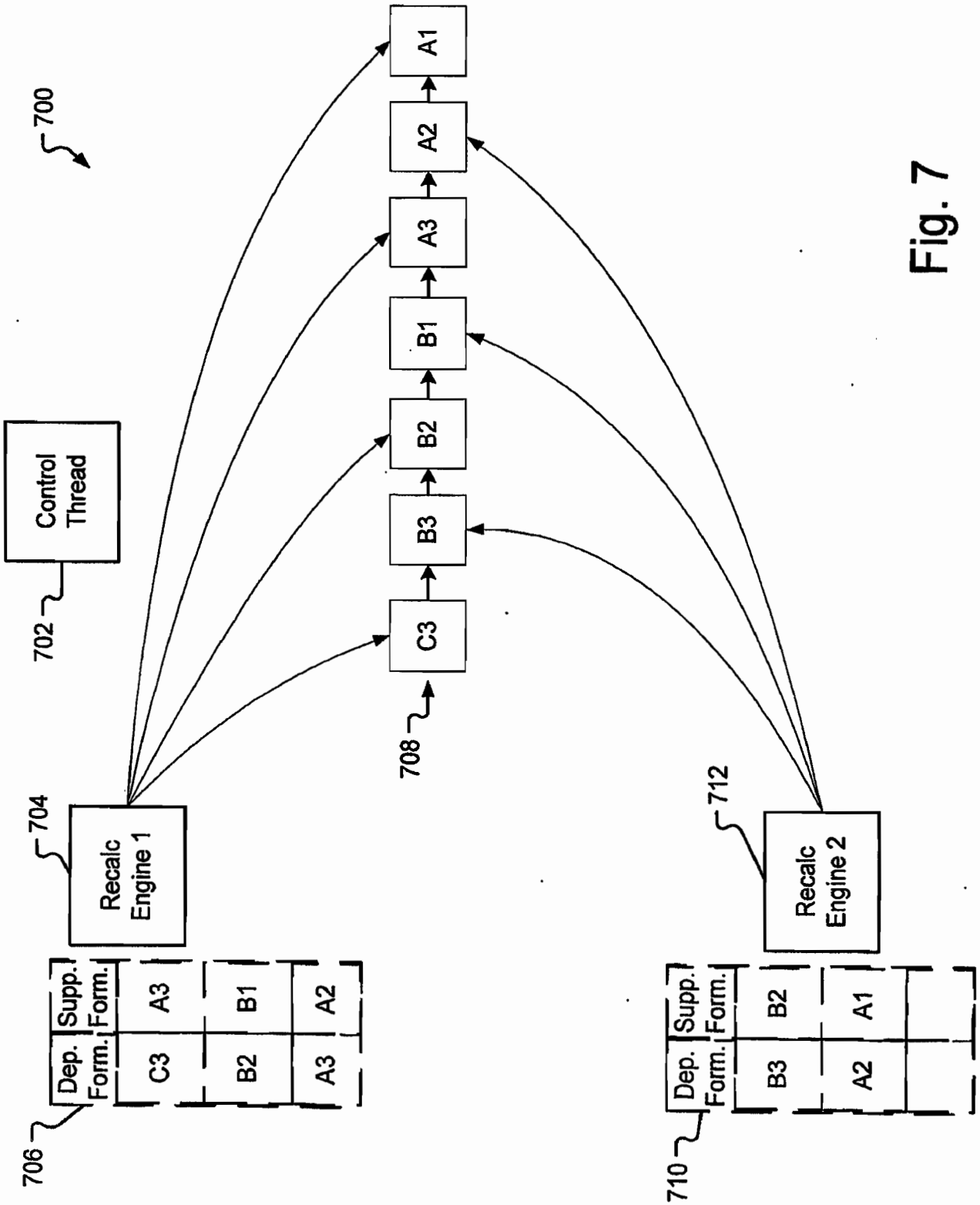
700
Control Thread
702
704
Recalc Engine 1
706
Dep. Form.
Supp. Form.
C3
A3
B2
B1
A3
A2
708
C3
B3
B2
B1
A3
A2
A1
710
Dep. Form.
Supp. Form.
B3
B2
A2
A1
712
Recalc Engine 2

Fig. 7

~~8/15~~

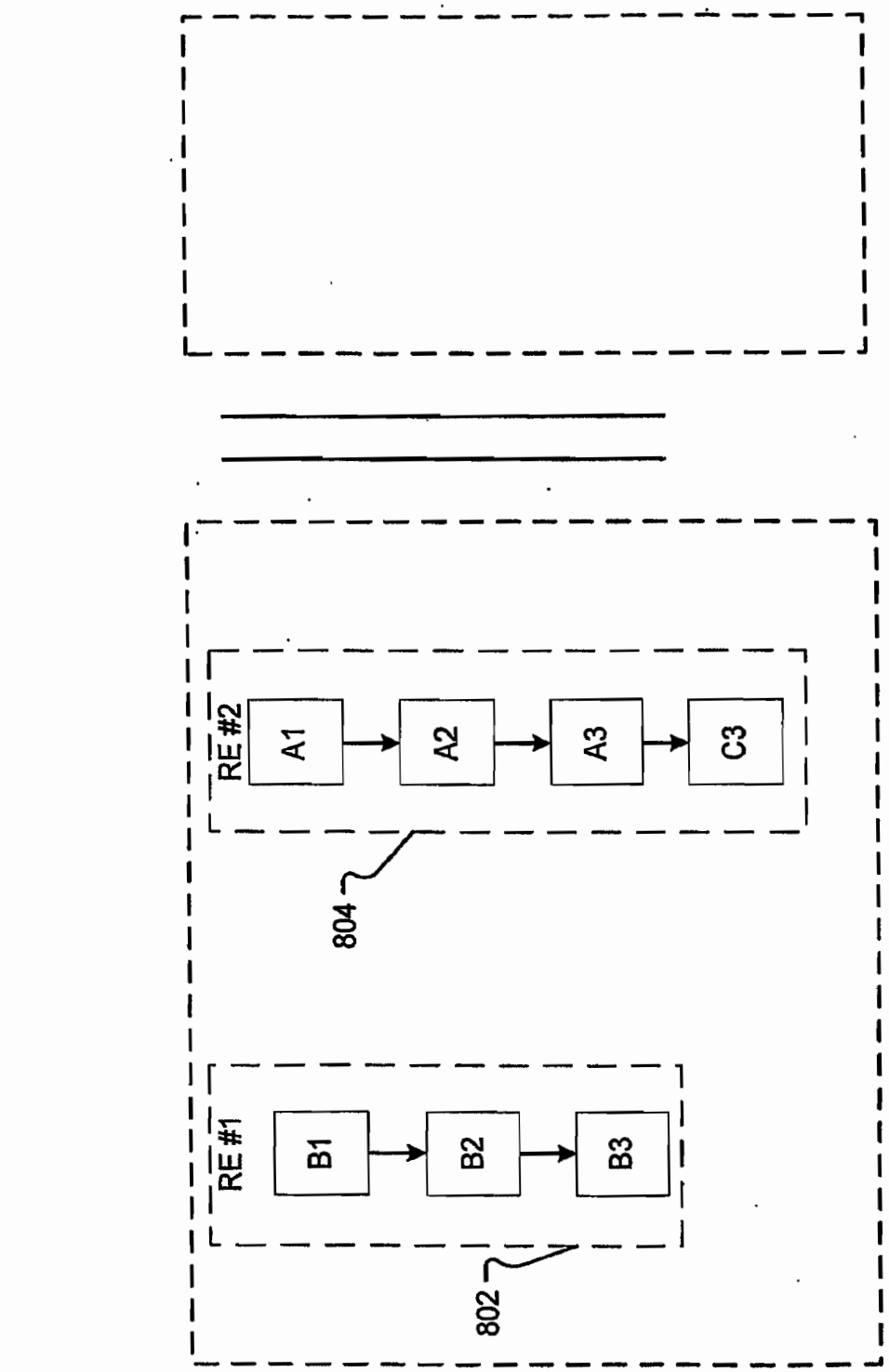
Dependency Level #2
808
RE #2
A1
A2
A3
C3
804
Dependency Level #1
806
RE #1
B1
B2
B3
802
800

Fig. 8

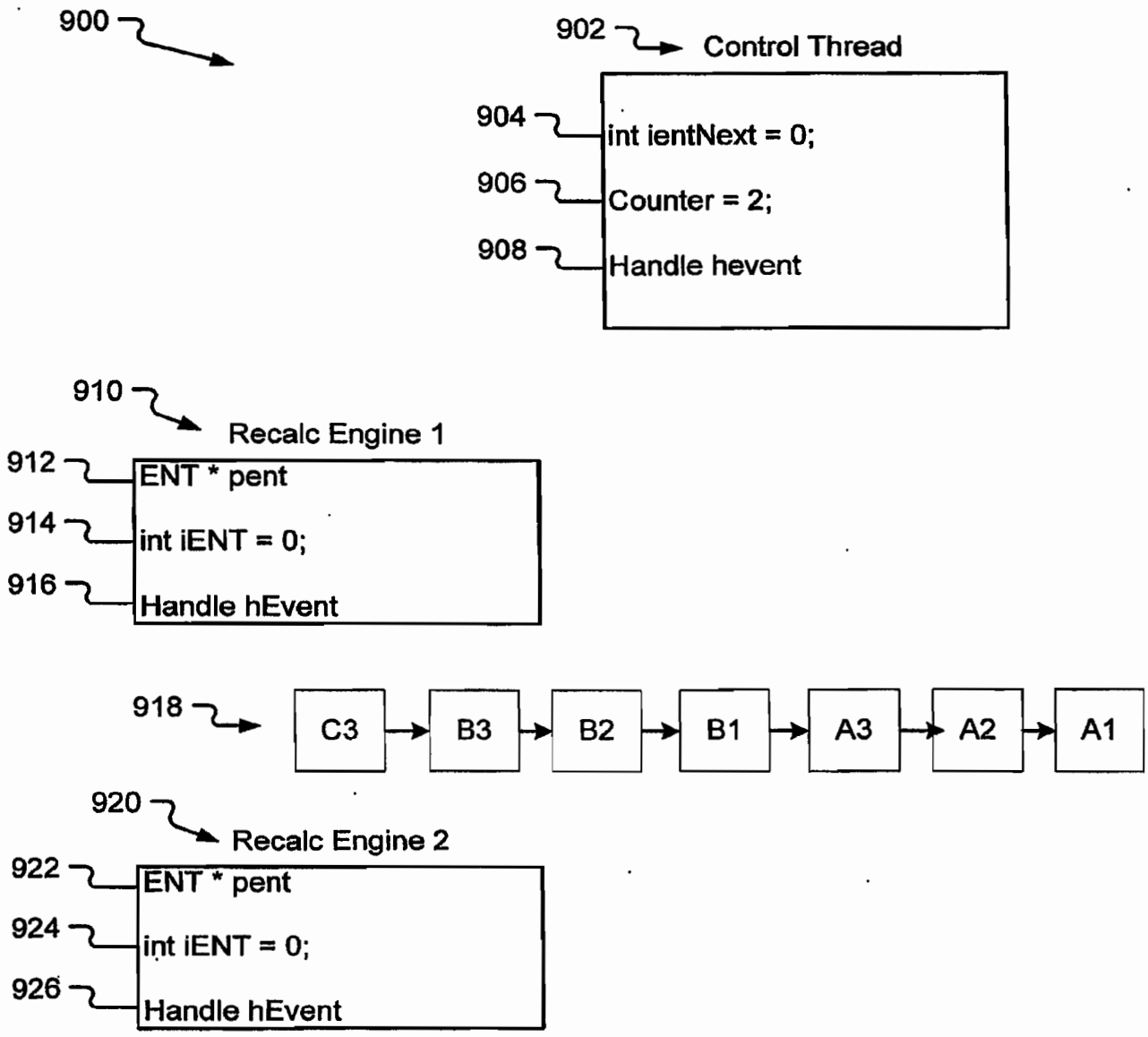
900
902
Control Thread
904
int ientNext = 0;
906
Counter = 2;
908
Handle hevent
910
Recalc Engine 1
912
ENT * pent
914
int iENT = 0;
916
Handle hEvent
918
C3
B3
B2
B1
A3
A2
A1
920
Recalc Engine 2
922
ENT * pent
924
int iENT = 0;
926
Handle hEvent

Fig. 9

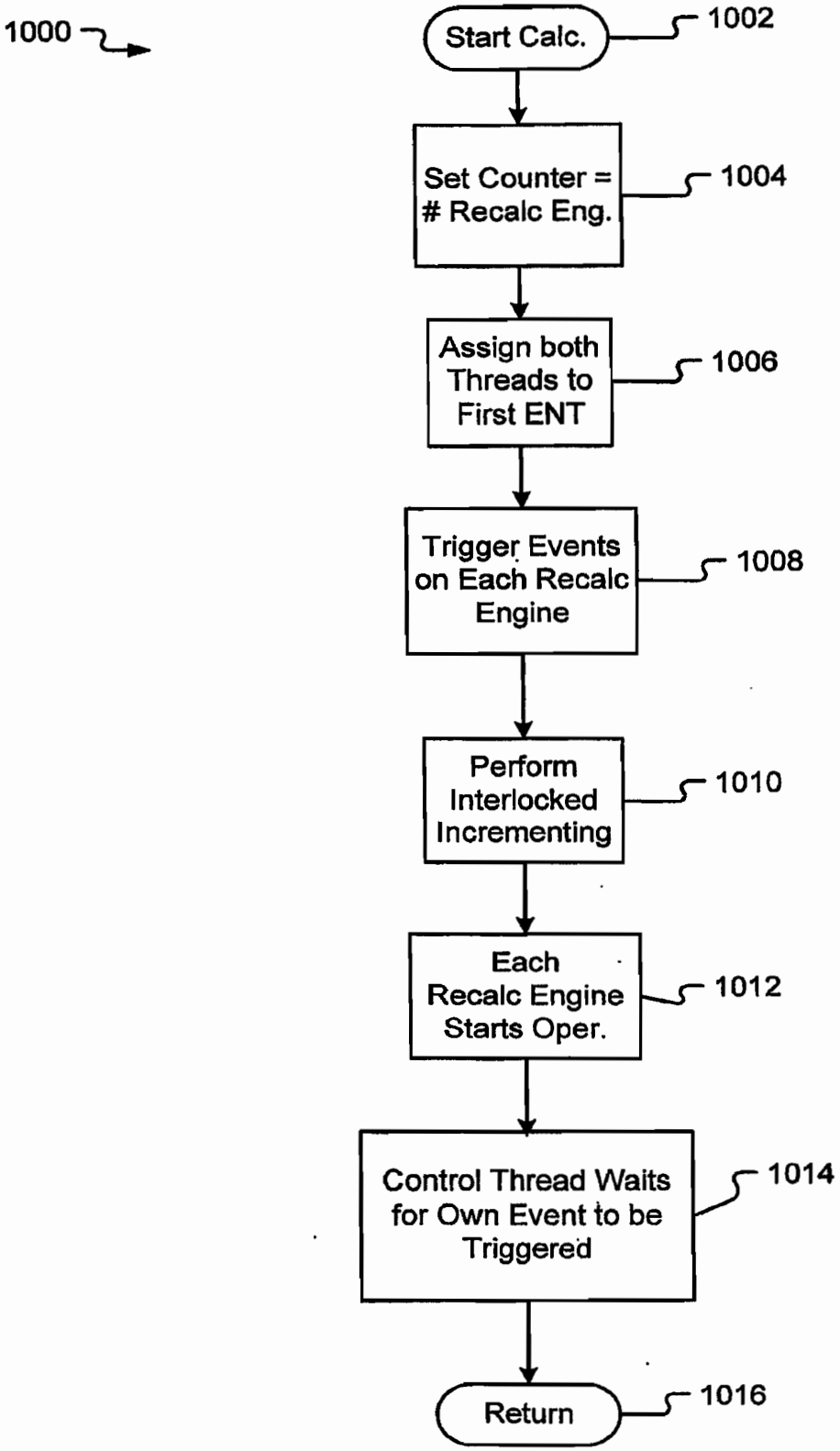
1000
Start Calc.
1002
Set Counter = # Recalc Eng.
1004
Assign both Threads to First ENT
1006
Trigger Events on Each Recalc Engine
1008
Perform Interlocked Incrementing
1010
Each Recalc Engine Starts Oper.
1012
Control Thread Waits for Own Event to be Triggered
1014
Return
1016

Fig. 10A

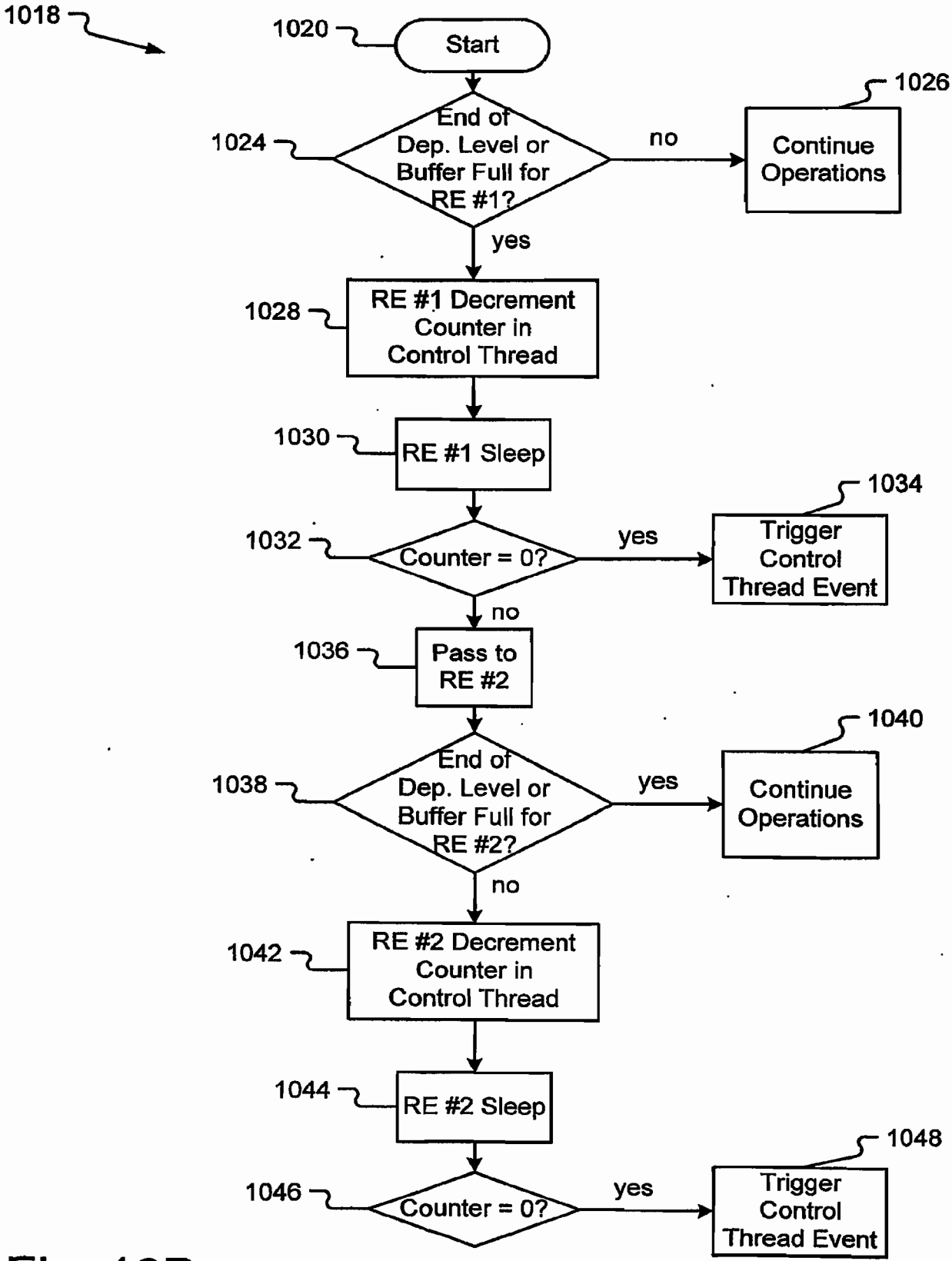
1018
1020
Start
1024
End of Dep. Level or Buffer Full for RE #1?
no
1026
Continue Operations
yes
1028
RE #1 Decrement Counter in Control Thread
1030
RE #1 Sleep
1032
Counter = 0?
yes
1034
Trigger Control Thread Event
no
1036
Pass to RE #2
1038
End of Dep. Level or Buffer Full for RE #2?
yes
1040
Continue Operations
no
1042
RE #2 Decrement Counter in Control Thread
1044
RE #2 Sleep
1046
Counter = 0?
yes
1048
Trigger Control Thread Event

Fig. 10B

~~11/15~~

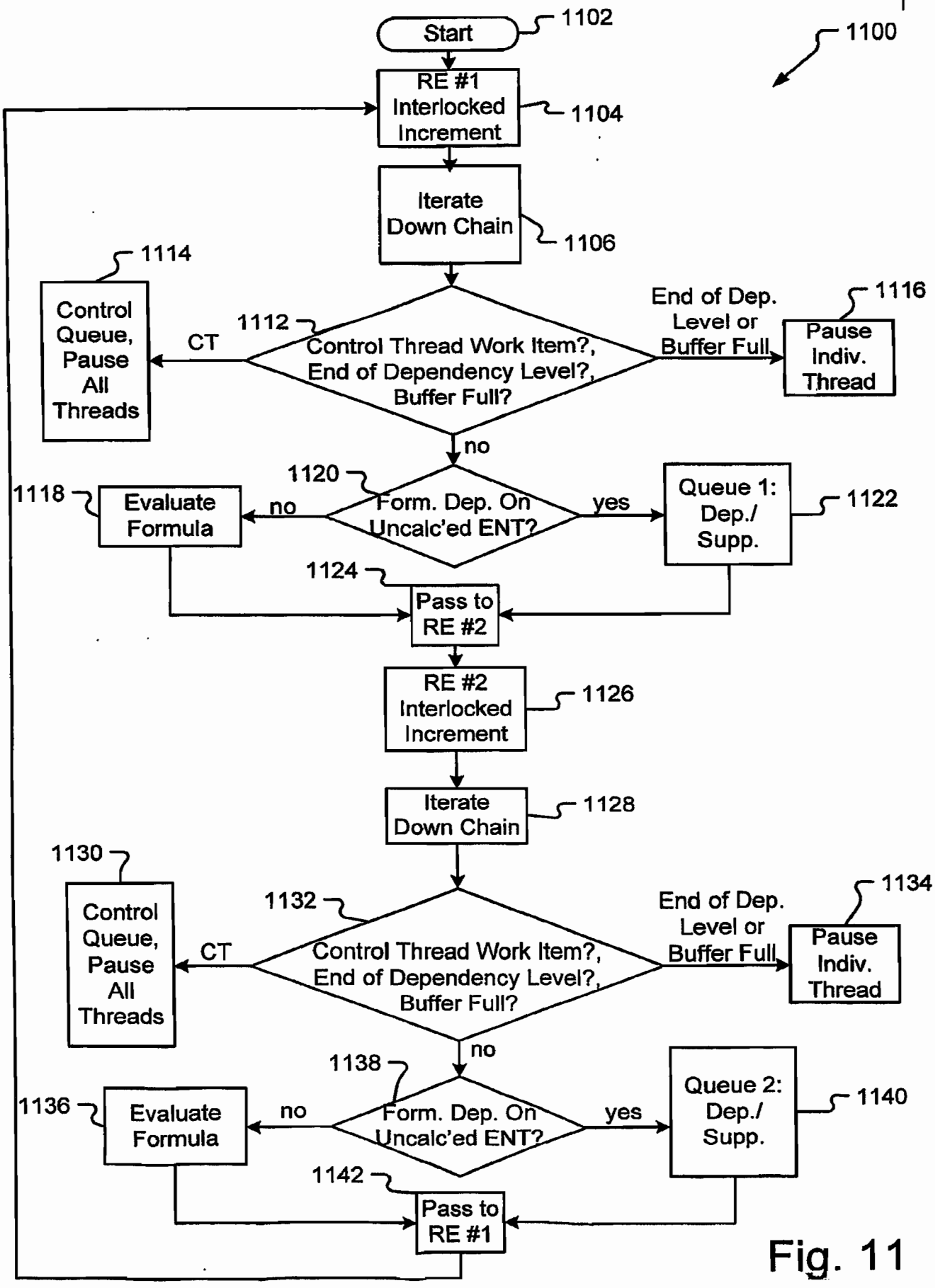
1100
Start
1102
RE #1 Interlocked Increment
1104
Iterate Down Chain
1106
1114
Control Queue, Pause All Threads
CT
1112
Control Thread Work Item?, End of Dependency Level?, Buffer Full?
End of Dep. Level or Buffer Full
1116
Pause Indiv. Thread
no
1120
Form. Dep. On Uncalc'ed ENT?
1118
Evaluate Formula
no
yes
Queue 1: Dep./ Supp.
1122
1124
Pass to RE #2
RE #2 Interlocked Increment
1126
Iterate Down Chain
1128
1130
Control Queue, Pause All Threads
CT
1132
Control Thread Work Item?, End of Dependency Level?, Buffer Full?
End of Dep. Level or Buffer Full
1134
Pause Indiv. Thread
no
1138
Form. Dep. On Uncalc'ed ENT?
1136
Evaluate Formula
no
yes
Queue 2: Dep./ Supp.
1140
1142
Pass to RE #1

Fig. 11

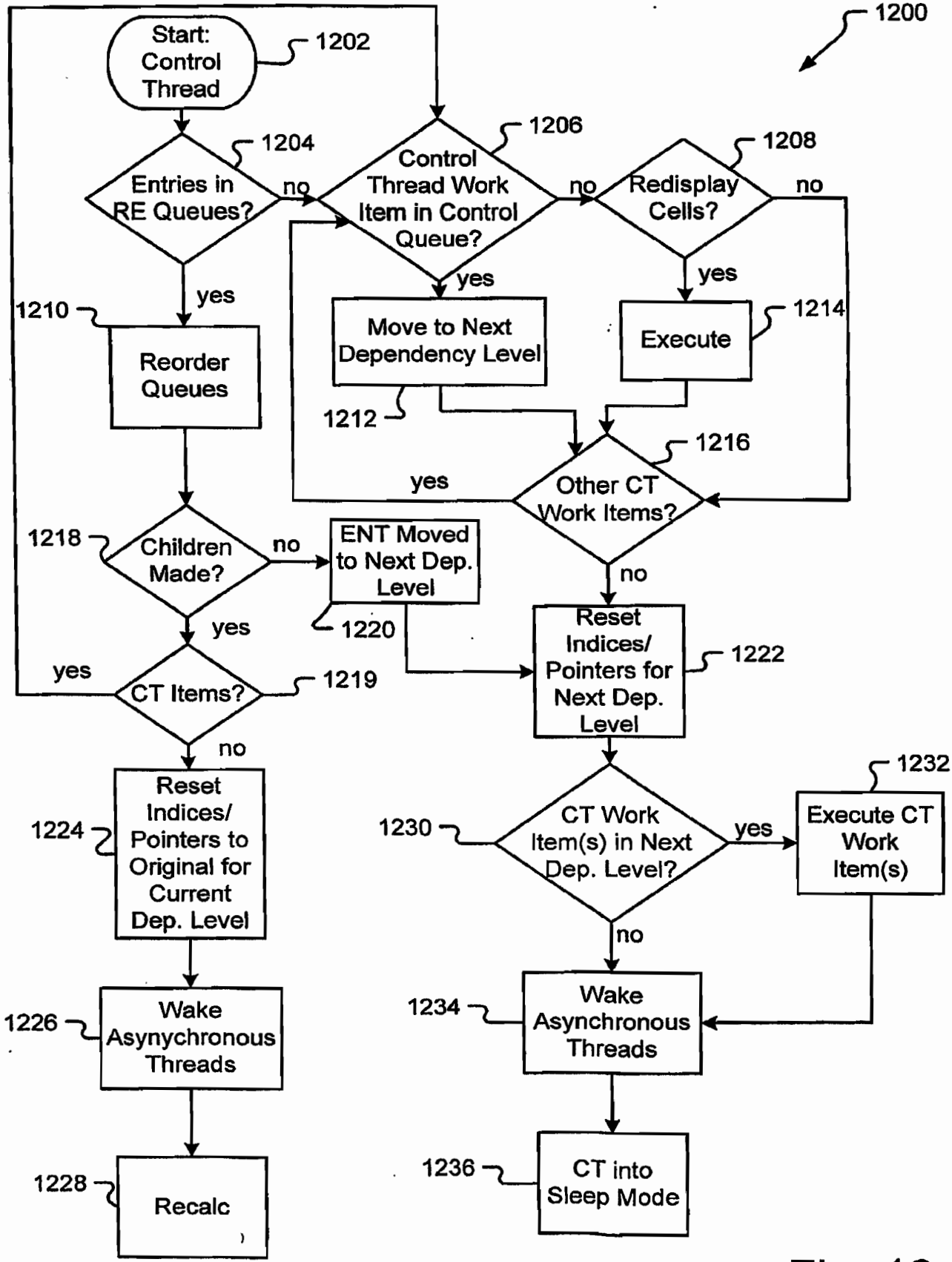
1200
Start: Control Thread
1202
1204
Entries in RE Queues?
no
yes
1206
Control Thread Work Item in Control Queue?
no
yes
1208
Redisplay Cells?
no
yes
1210
Reorder Queues
Move to Next Dependency Level
1212
Execute
1214
1216
Other CT Work Items?
yes
no
1218
Children Made?
no
yes
ENT Moved to Next Dep. Level
1220
yes
CT Items?
1219
no
Reset Indices/ Pointers for Next Dep. Level
1222
1224
Reset Indices/ Pointers to Original for Current Dep. Level
1230
CT Work Item(s) in Next Dep. Level?
yes
1232
Execute CT Work Item(s)
no
1226
Wake Asynychronous Threads
1234
Wake Asynchronous Threads
1228
Recalc
1236
CT into Sleep Mode

Fig. 12

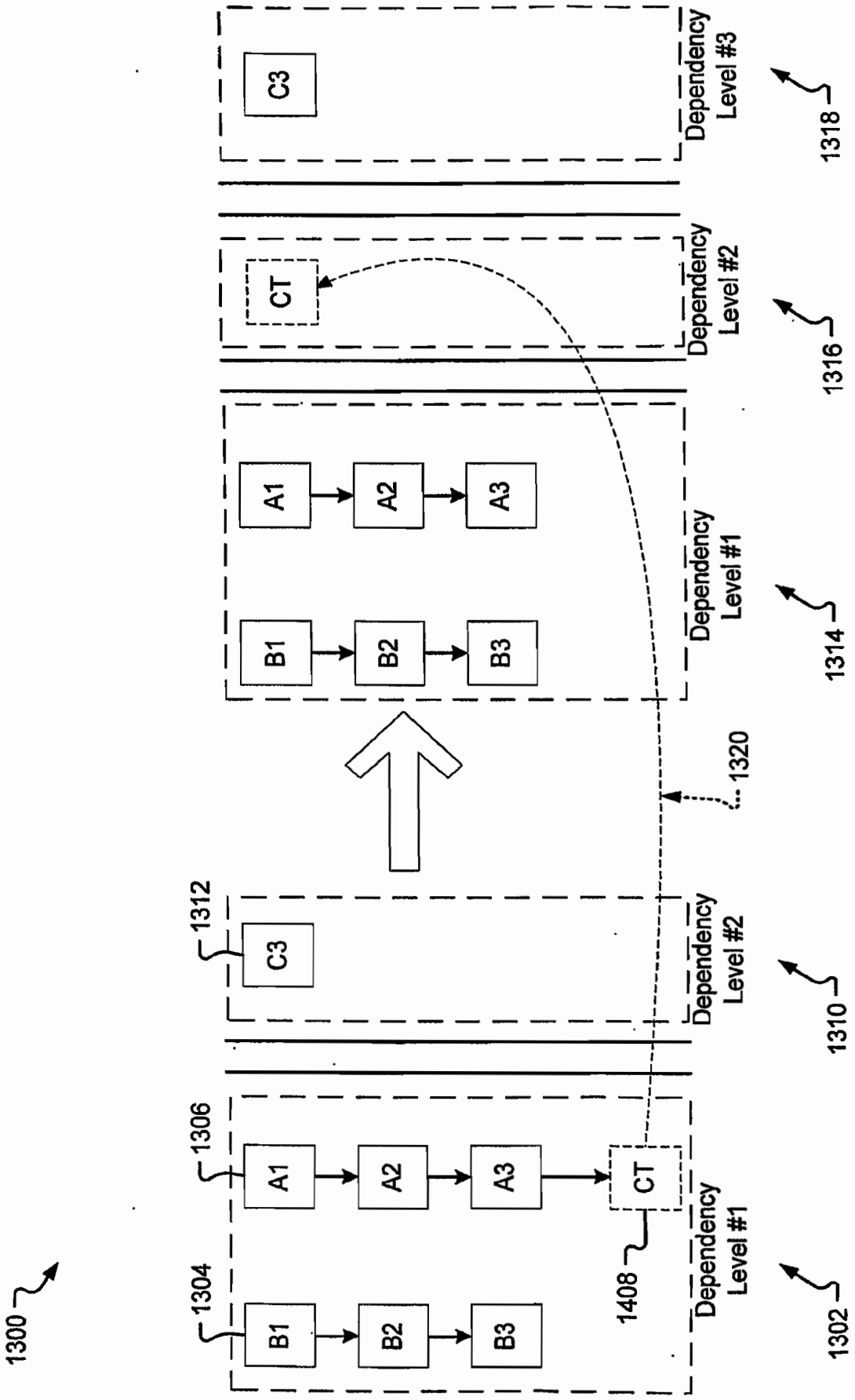
1300
1302
Dependency Level #1
1304
B1
B2
B3
1306
A1
A2
A3
CT
1408
1310
Dependency Level #2
1312
C3
1314
Dependency Level #1
A1
A2
A3
B1
B2
B3
1316
Dependency Level #2
CT
1318
Dependency Level #3
C3
1320

Fig. 13

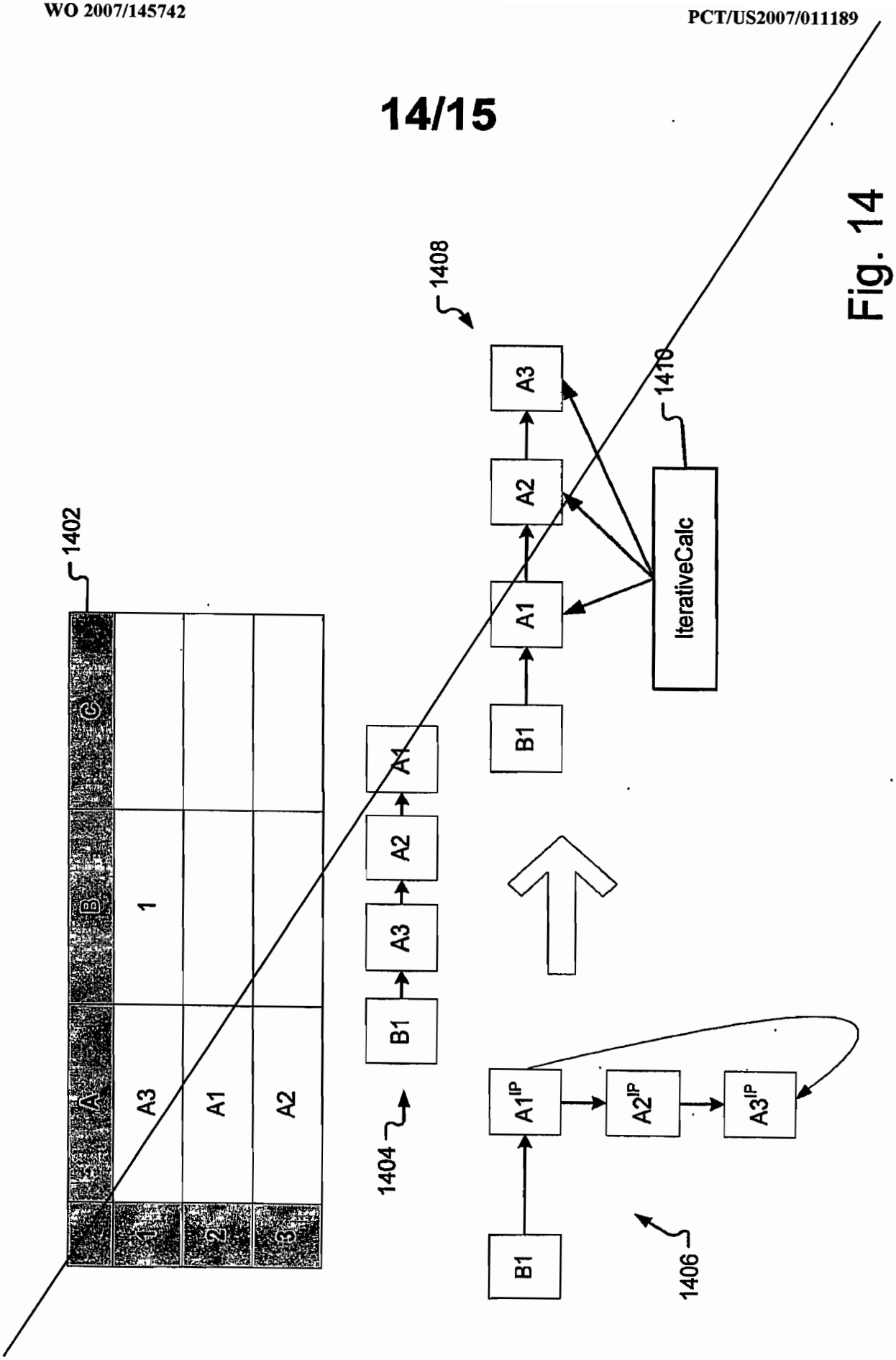
1402
A
B
C
1
2
3
A3
A1
A2
1404
B1
A3
A2
A1
1406
B1
A1IP
A2IP
A3IP
1408
B1
A1
A2
A3
1410
IterativeCalc

Fig. 14

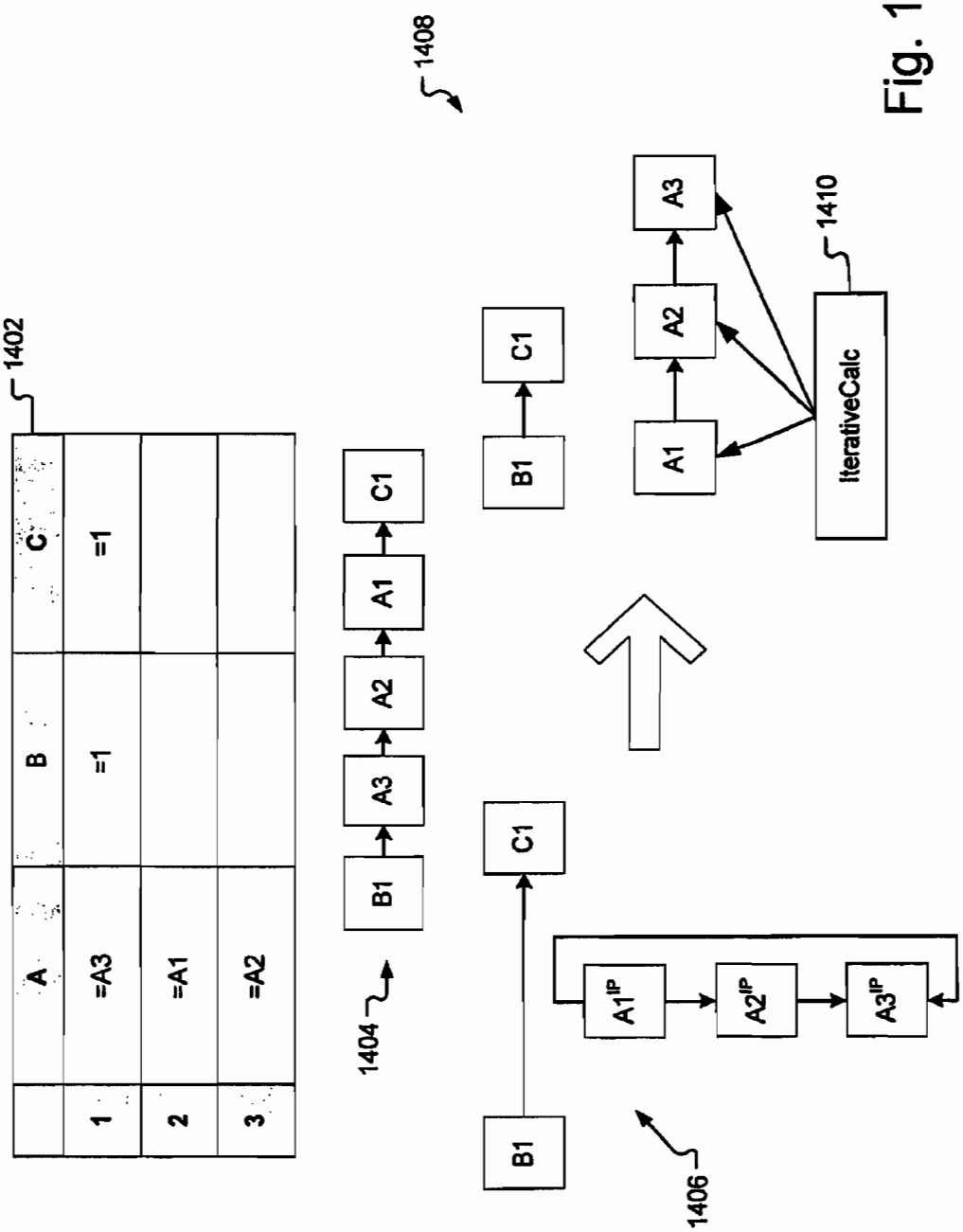
1402
A
B
C
1
=A3
=1
2
=A1
=1
3
=A2
1404
B1
A3
A2
A1
C1
1406
B1
C1
A1IP
A2IP
A3IP
1408
B1
C1
A1
A2
A3
1410
IterativeCalc

Fig. 14A

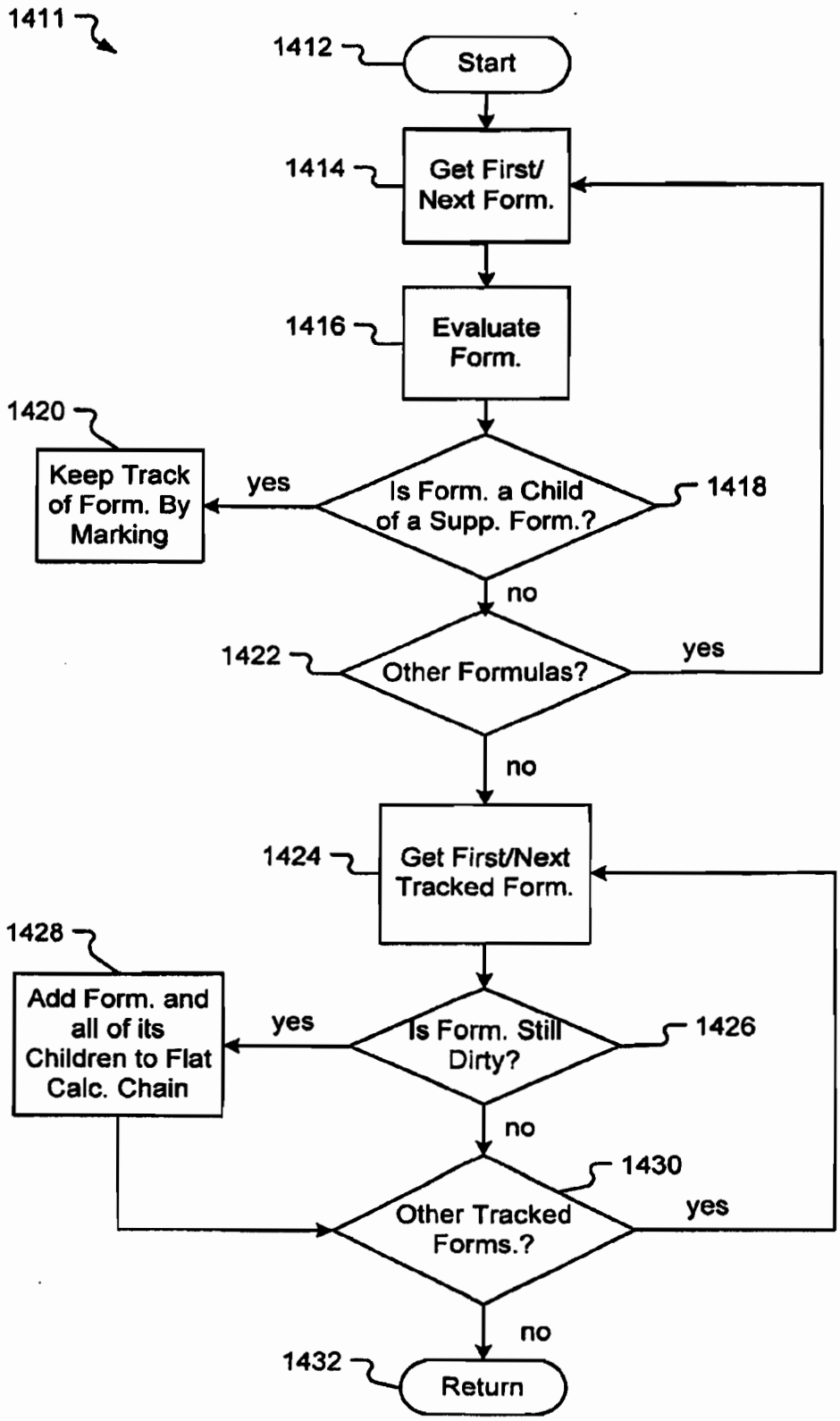
1411
1412
Start
1414
Get First/ Next Form.
1416
Evaluate Form.
1420
Keep Track of Form. By Marking
yes
Is Form. a Child of a Supp. Form.?
1418
no
1422
Other Formulas?
yes
no
1424
Get First/Next Tracked Form.
1428
Add Form. and all of its Children to Flat Calc. Chain
yes
Is Form. Still Dirty?
1426
no
1430
Other Tracked Forms.?
yes
no
1432
Return

Fig. 14B

~~15/15~~

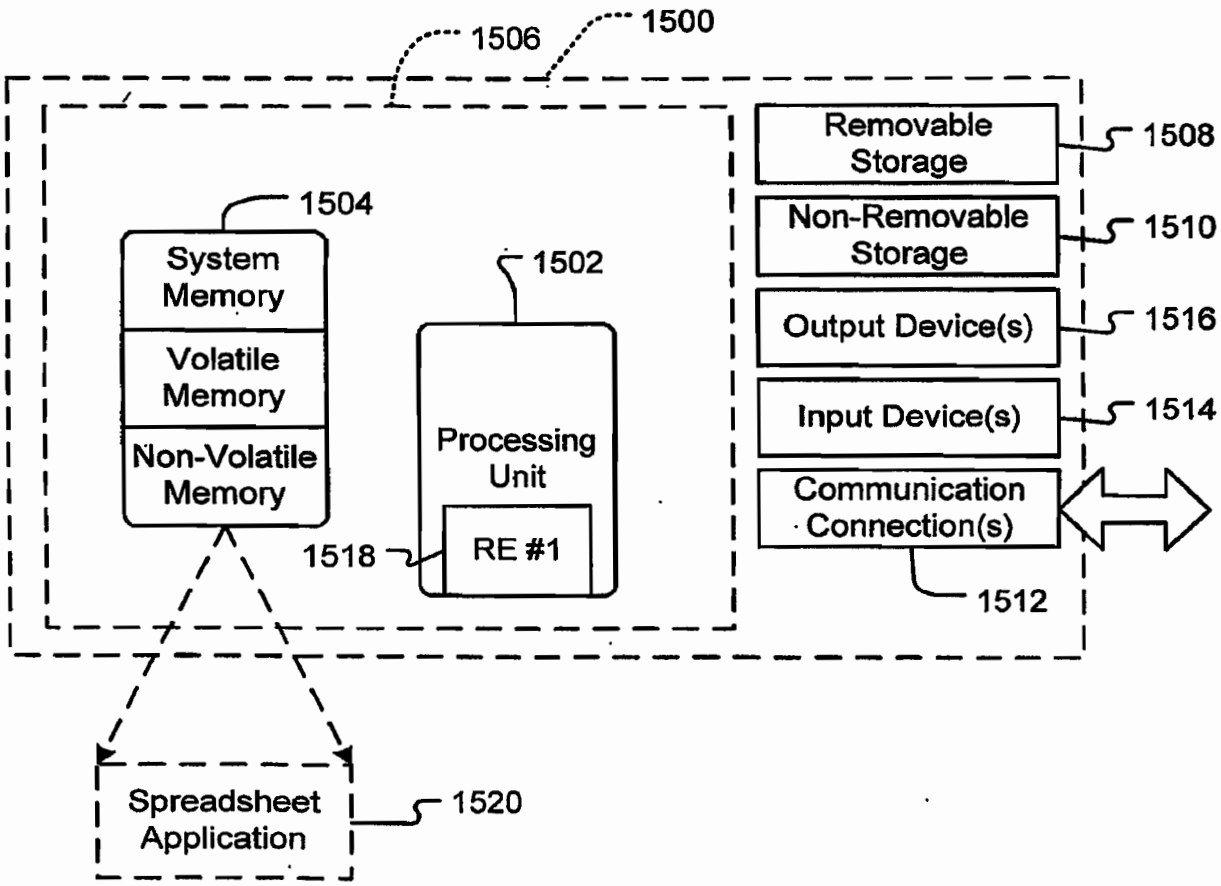
1506
1500
Removable Storage
1508
1504
System Memory
Volatile Memory
Non-Volatile Memory
1502
Processing Unit
RE #1
1518
Non-Removable Storage
1510
Output Device(s)
1516
Input Device(s)
1514
Communication Connection(s)
1512
Spreadsheet Application
1520

Fig. 15