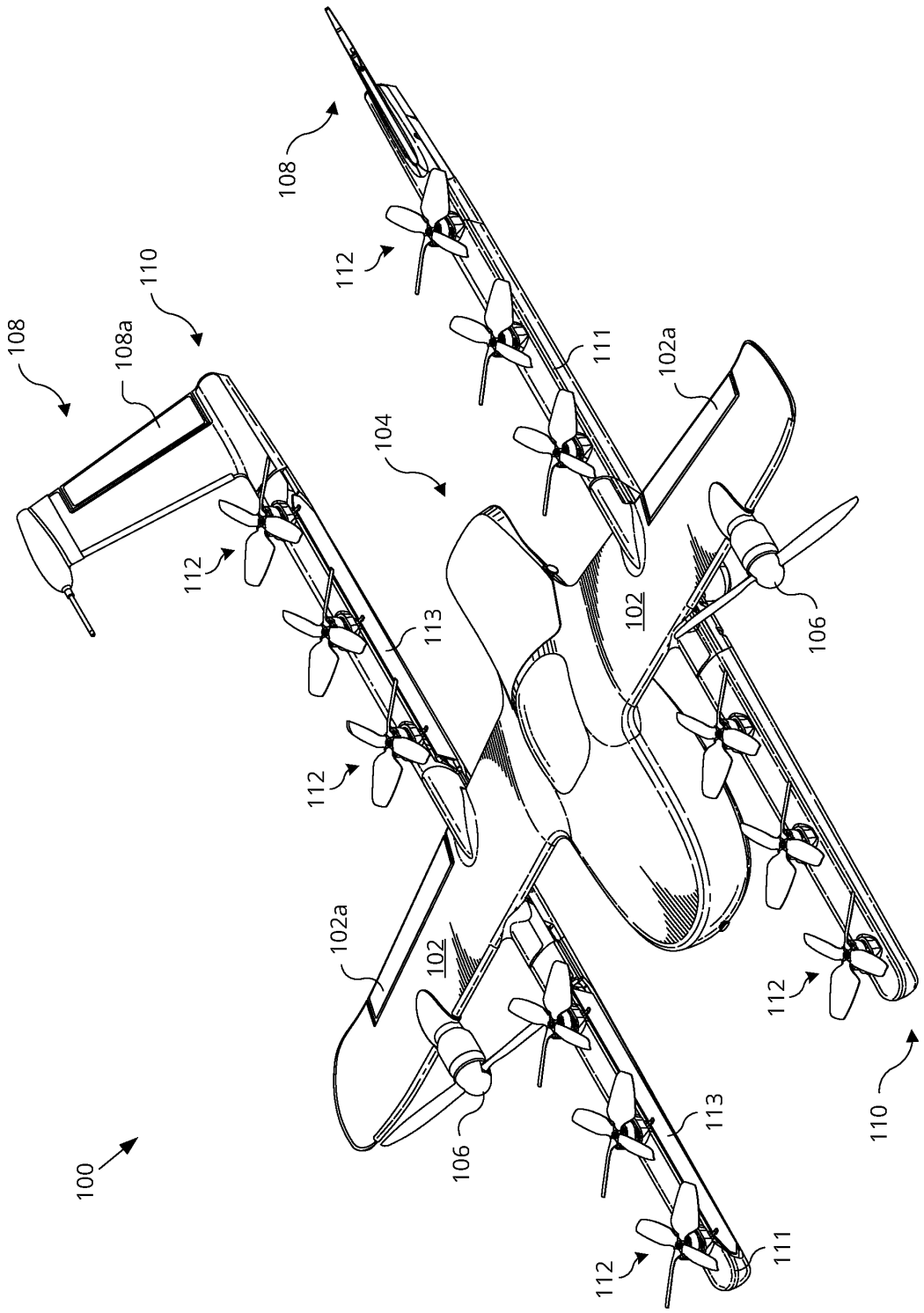

FIG. 1A

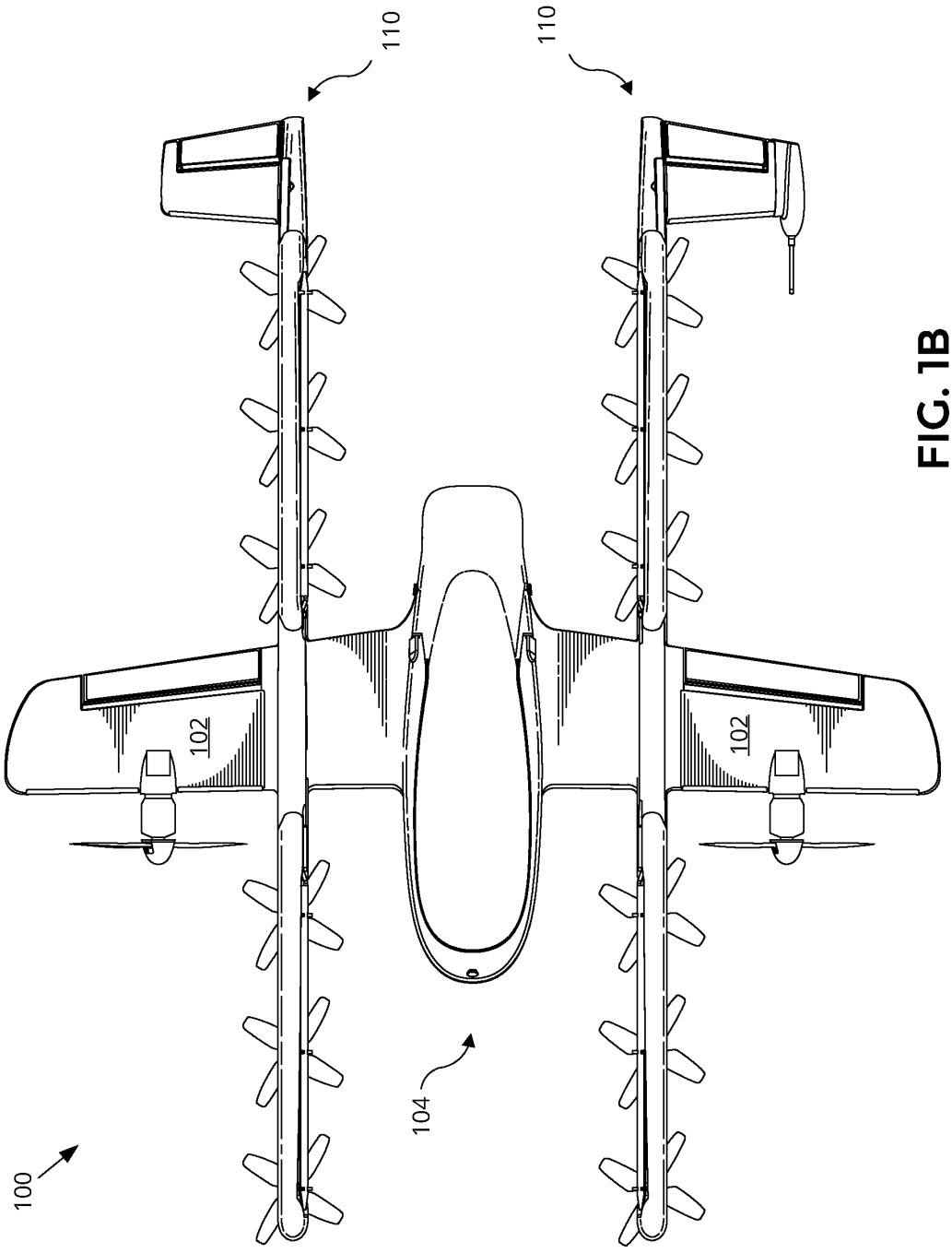

FIG. 1B

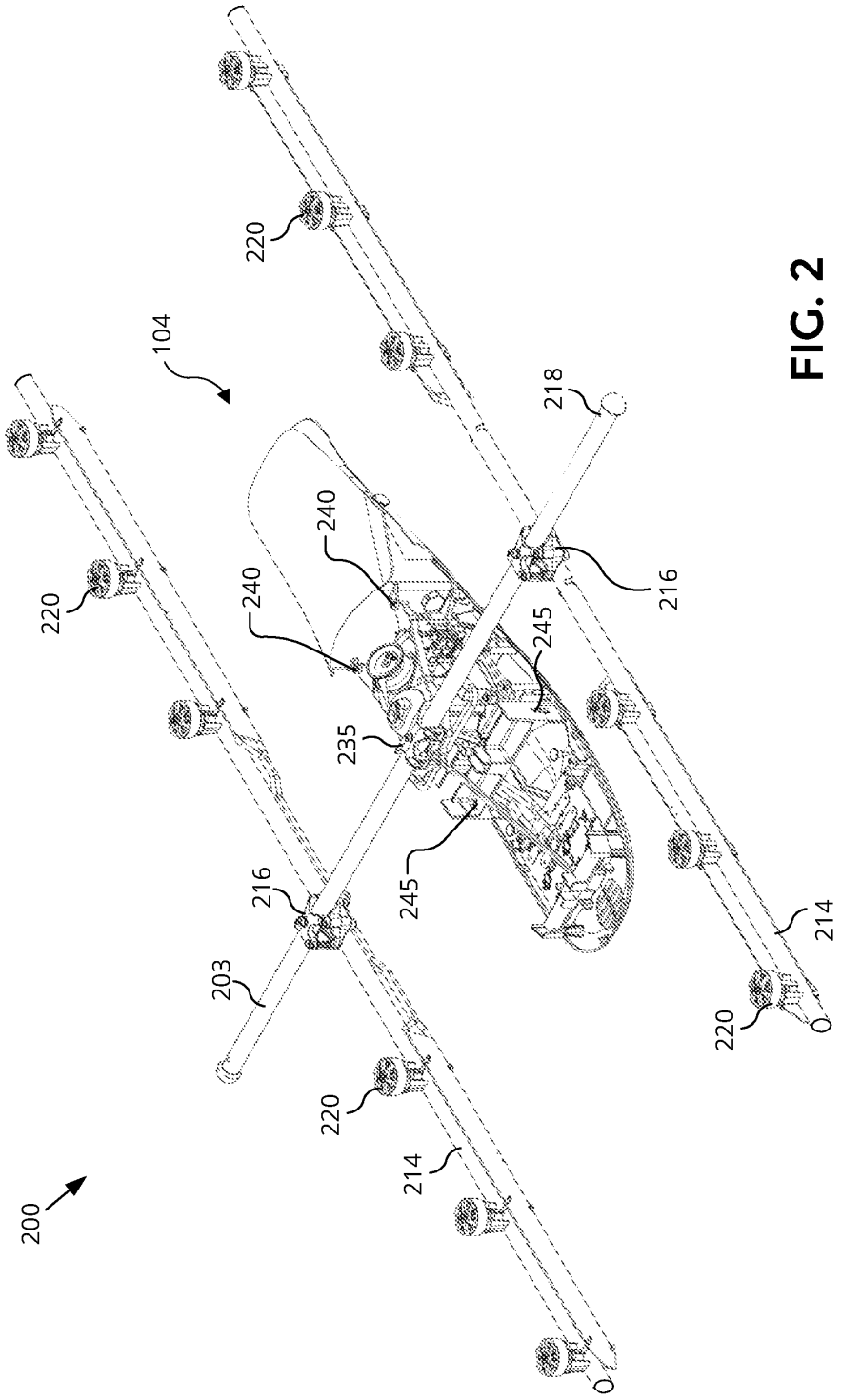
200
104
220
220
220
220
214
214
216
216
218
203
235
240
240
245
245

FIG. 2

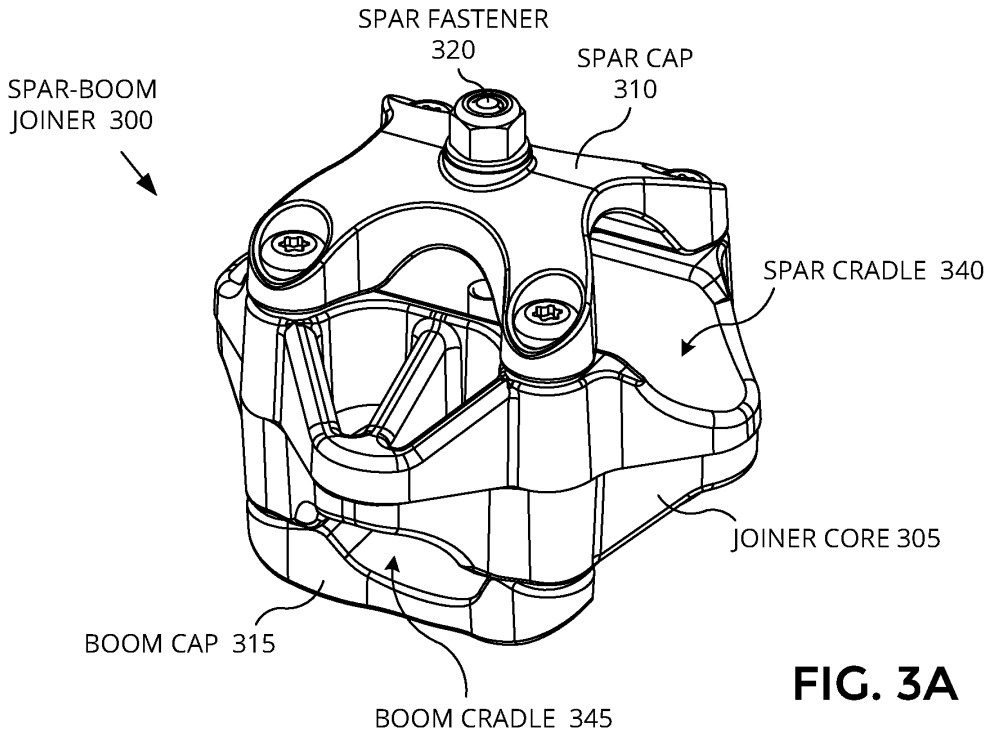
SPAR FASTENER
320
SPAR CAP
310
SPAR-BOOM
JOINER 300
SPAR CRADLE 340
JOINER CORE 305
BOOM CAP 315
BOOM CRADLE 345

FIG. 3A

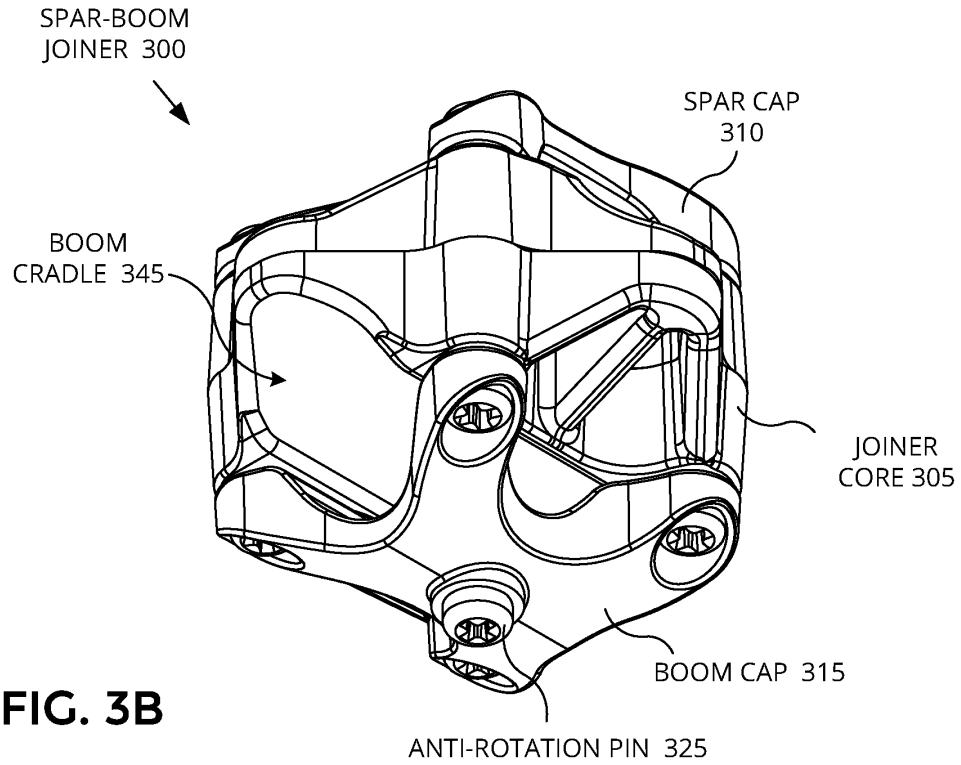
SPAR-BOOM
JOINER 300
SPAR CAP
310
BOOM
CRADLE 345
JOINER
CORE 305
BOOM CAP 315
ANTI-ROTATION PIN 325

FIG. 3B

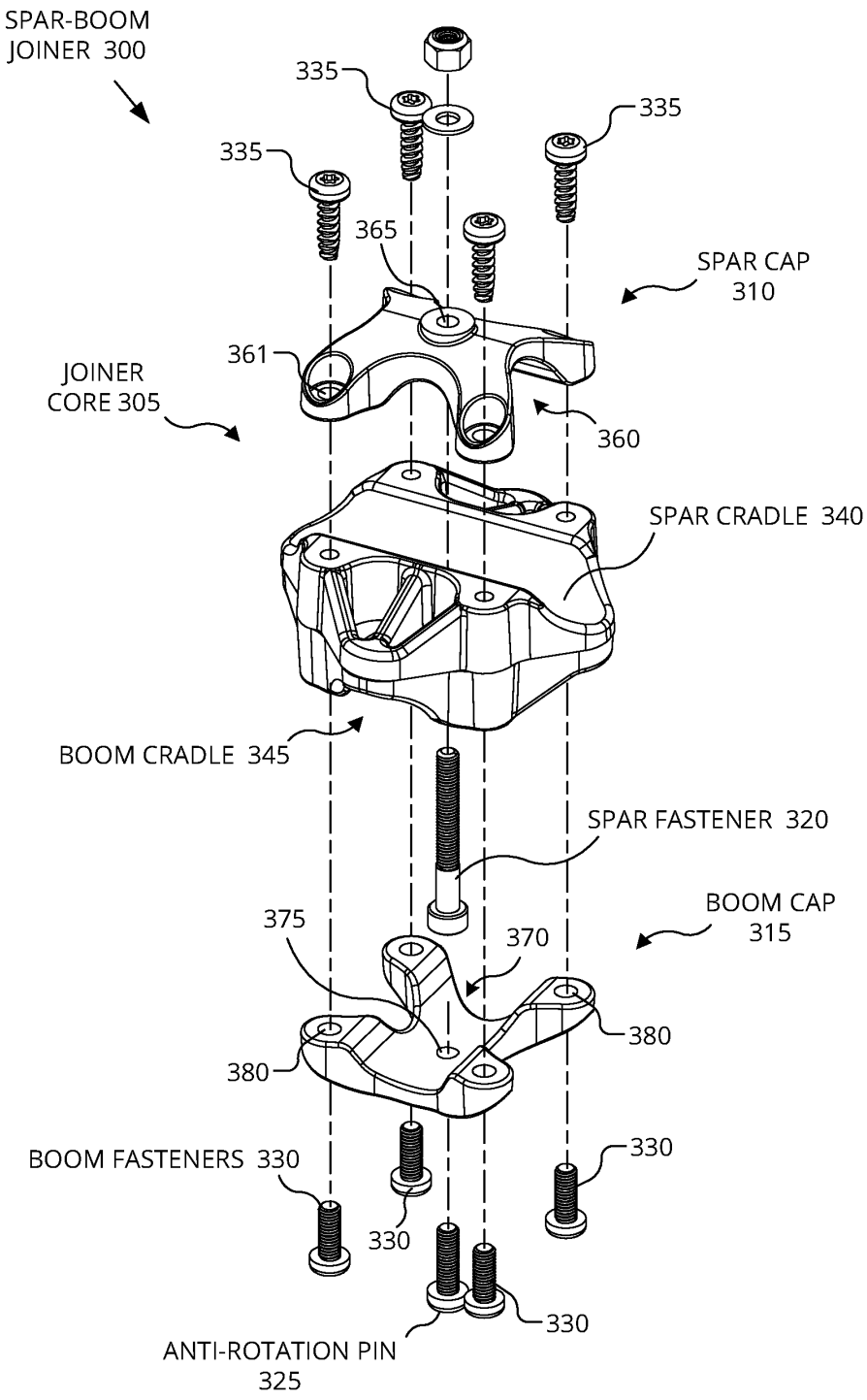
SPAR-BOOM JOINER 300
335
335
335
365
SPAR CAP 310
361
JOINER CORE 305
360
SPAR CRADLE 340
BOOM CRADLE 345
SPAR FASTENER 320
BOOM CAP 315
375
370
380
380
BOOM FASTENERS 330
330
330
330
ANTI-ROTATION PIN 325

FIG. 3C

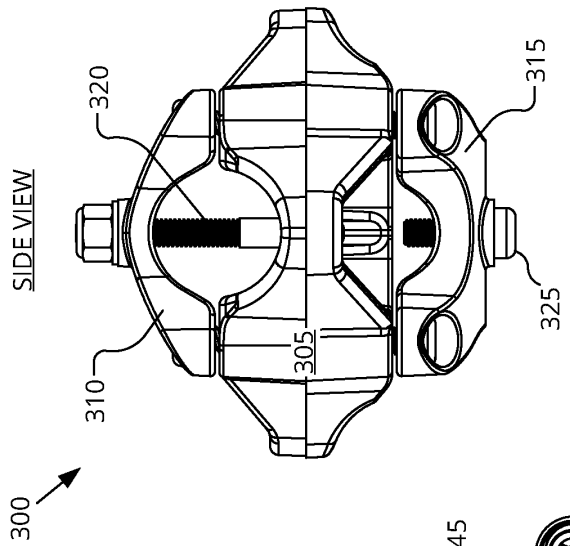

FIG. 3F

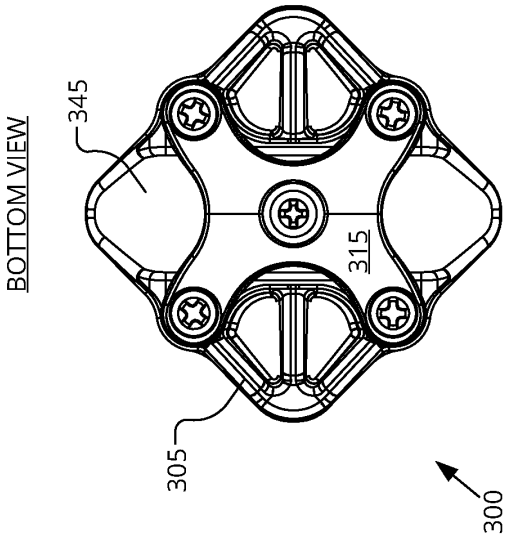

FIG. 3E

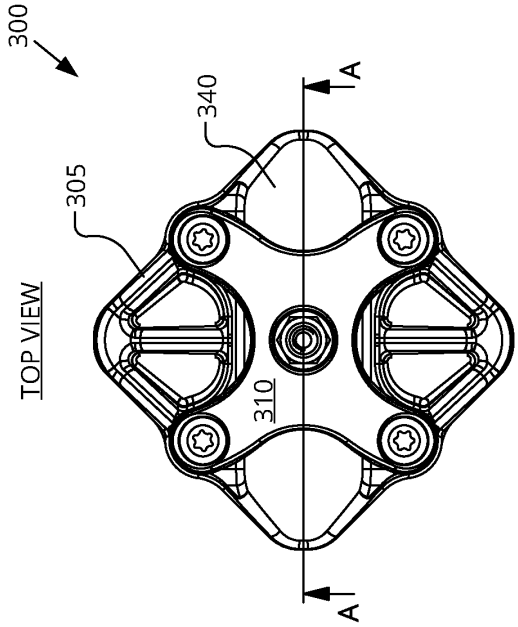

FIG. 3D

CROSS-SECTION (A-A)

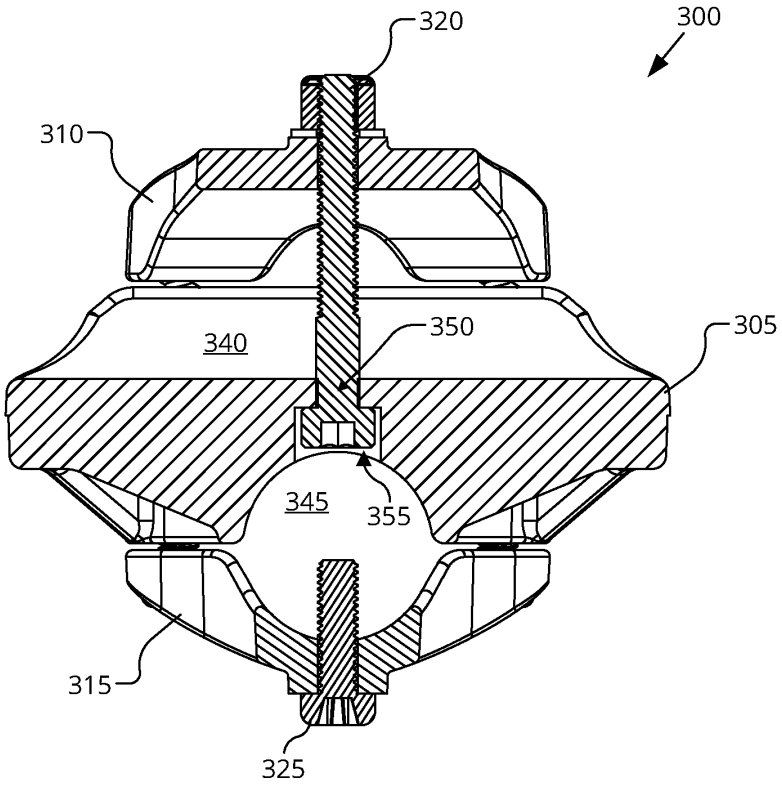

FIG. 3G