(12) INTERNATIONAL APPLICATION PUBLISHED UNDER THE PATENT COOPERATION TREATY (PCT)

(19) World Intellectual Property Organization
International Bureau

(43) International Publication Date
2 October 2008 (02.10.2008)

PCT

(10) International Publication Number
WO 2008/118576 A1

(51) International Patent Classification:
C08F 210/12 (2006.01) *C08F 2/12* (2006.01)
C08F 2/04 (2006.01)

(21) International Application Number:
PCT/US2008/054567

(22) International Filing Date:
21 February 2008 (21.02.2008)

(25) Filing Language: English

(26) Publication Language: English

(30) Priority Data:
11/728,306 23 March 2007 (23.03.2007) US

(71) Applicant *(for all designated States except US)*: **EXXONMOBIL CHEMICAL PATENTS INC.** [US/US]; 5200 Bayway Drive, Baytown, TX 77520-2101 (US).

(72) Inventors; and

(75) Inventors/Applicants *(for US only)*: **SHAFFER, Timothy, D.** [US/US]; 99 Russling Road, Hackettstown, NJ 07840 (US). **MCDONALD, Michael, F.** [US/US]; 5634 Spring Lodge, Kingwood, TX 77345 (US). **CHUNG, David, Y.** [US/US]; 8802 Croes Drive, Houston, TX 77055 (US). **WEBB, Robert, N.** [US/US]; 5902 Rapid Creek Court, Kingwood, TX 77345 (US). **DAVIS, Deborah, Jean** [US/US]; 7642 Rainbow Bend Drive, Pasadena, TX 77505 (US). **WRIGHT, Pamela, J.** [US/US]; 910 Meco Road, Easton, PA 18040 (US).

(74) Agents: **KRAWCZYK, Nancy, T.** et al.; Exxonmobil Chemical Company, Law Technology, P.o. Box 2149, Baytown, TX 77522-2149 (US).

(81) Designated States *(unless otherwise indicated, for every kind of national protection available)*: AE, AG, AL, AM, AO, AT, AU, AZ, BA, BB, BG, BH, BR, BW, BY, BZ, CA, CH, CN, CO, CR, CU, CZ, DE, DK, DM, DO, DZ, EC, EE, EG, ES, FI, GB, GD, GE, GH, GM, GT, HN, HR, HU, ID, IL, IN, IS, JP, KE, KG, KM, KN, KP, KR, KZ, LA, LC, LK, LR, LS, LT, LU, LY, MA, MD, ME, MG, MK, MN, MW, MX, MY, MZ, NA, NG, NI, NO, NZ, OM, PG, PH, PL, PT, RO, RS, RU, SC, SD, SE, SG, SK, SL, SM, SV, SY, TJ, TM, TN, TR, TT, TZ, UA, UG, US, UZ, VC, VN, ZA, ZM, ZW.

(84) Designated States *(unless otherwise indicated, for every kind of regional protection available)*: ARIPO (BW, GH, GM, KE, LS, MW, MZ, NA, SD, SL, SZ, TZ, UG, ZM, ZW), Eurasian (AM, AZ, BY, KG, KZ, MD, RU, TJ, TM), European (AT, BE, BG, CH, CY, CZ, DE, DK, EE, ES, FI, FR, GB, GR, HR, HU, IE, IS, IT, LT, LU, LV, MC, MT, NL, NO, PL, PT, RO, SE, SI, SK, TR), OAPI (BF, BJ, CF, CG, CI, CM, GA, GN, GQ, GW, ML, MR, NE, SN, TD, TG).

[Continued on next page]

(54) Title: POLYDISPERSITY-CONTROLLED ISOOLEFIN POLYMERIZATION WITH POLYMORPHOGENATES

Fig. 1

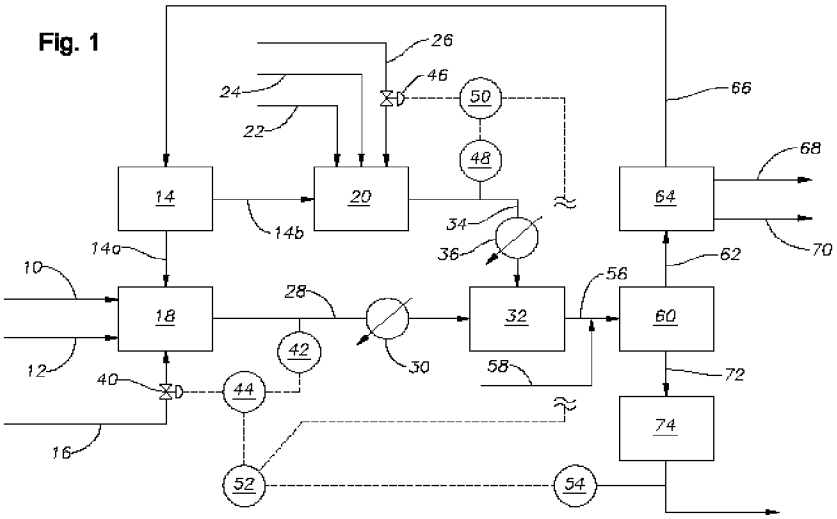

(57) Abstract: The disclosure provides for a process and polymerization system to produce isoolefin polymers (72) utilizing polymorphogenates (16, 26) in the catalyst system to control polydispersity (MWD). The disclosure also provides a catalyst system (20) comprising a plurality of active catalyst complex species (34) formed by combination of a Lewis acid (24), an initiator (22) and a polymorphogenate (26), as well as polymers made using the catalyst system or process. The polymorphogenate (16, 26) can promote or mimic the formation of different active catalyst complex species (34) having different polymerization rates, i.e. different rates of propagation, chain transfer, or termination, as observed by different polydispersities resulting from the presence of relatively different proportions of the polymorphogenate.

WO 2008/118576 A1

Published:
— *with international search report*