(12) INTERNATIONAL APPLICATION PUBLISHED UNDER THE PATENT COOPERATION TREATY (PCT)

(19) World Intellectual Property Organization
International Bureau

(43) International Publication Date
30 March 2023 (30.03.2023)

WIPO | PCT

(10) International Publication Number
WO 2023/049576 A1

(51) International Patent Classification:
B01D 53/14 (2006.01)

(21) International Application Number:
PCT/US2022/075284

(22) International Filing Date:
22 August 2022 (22.08.2022)

(25) Filing Language: English

(26) Publication Language: English

(30) Priority Data:
17/484,068 24 September 2021 (24.09.2021) US

(71) Applicant: **EXXONMOBIL CHEMICAL PATENTS INC.** [US/US]; 5200 Bayway Drive, Baytown, TX 77520 (US).

(72) Inventors: **SPICER, David**; 5319 Del Monte Drive, Houston, TX 77056 (US). **KENDALL, James, L.**; 14203 Caprock Cove Lane, Humble, TX 77396 (US). **SLACK, Steven, M.**; 9711 Justin Ridge Lane, Humble, TX 77396 (US).

(74) Agent: **CHEN, Siwen** et al.; ExxonMobil Chemical Company, Law Department, P.O. Box 2149, Baytown, TX 77522-2149 (US).

(81) Designated States *(unless otherwise indicated, for every kind of national protection available)*: AE, AG, AL, AM, AO, AT, AU, AZ, BA, BB, BG, BH, BN, BR, BW, BY, BZ, CA, CH, CL, CN, CO, CR, CU, CV, CZ, DE, DJ, DK, DM, DO, DZ, EC, EE, EG, ES, FI, GB, GD, GE, GH, GM, GT, HN, HR, HU, ID, IL, IN, IQ, IR, IS, IT, JM, JO, JP, KE, KG, KH, KN, KP, KR, KW, KZ, LA, LC, LK, LR, LS, LU, LY, MA, MD, ME, MG, MK, MN, MW, MX, MY, MZ, NA, NG, NI, NO, NZ, OM, PA, PE, PG, PH, PL, PT, QA, RO, RS, RU, RW, SA, SC, SD, SE, SG, SK, SL, ST, SV, SY, TH, TJ, TM, TN, TR, TT, TZ, UA, UG, US, UZ, VC, VN, WS, ZA, ZM, ZW.

(84) Designated States *(unless otherwise indicated, for every kind of regional protection available)*: ARIPO (BW, GH, GM, KE, LR, LS, MW, MZ, NA, RW, SD, SL, ST, SZ, TZ, UG, ZM, ZW), Eurasian (AM, AZ, BY, KG, KZ, RU, TJ, TM), European (AL, AT, BE, BG, CH, CY, CZ, DE, DK, EE, ES, FI, FR, GB, GR, HR, HU, IE, IS, IT, LT, LU, LV, MC, MK, MT, NL, NO, PL, PT, RO, RS, SE, SI, SK, SM,

(54) Title: AMINE CO_2 SEPARATION PROCESS INTEGRATED WITH HYDROCARBONS PROCESSING

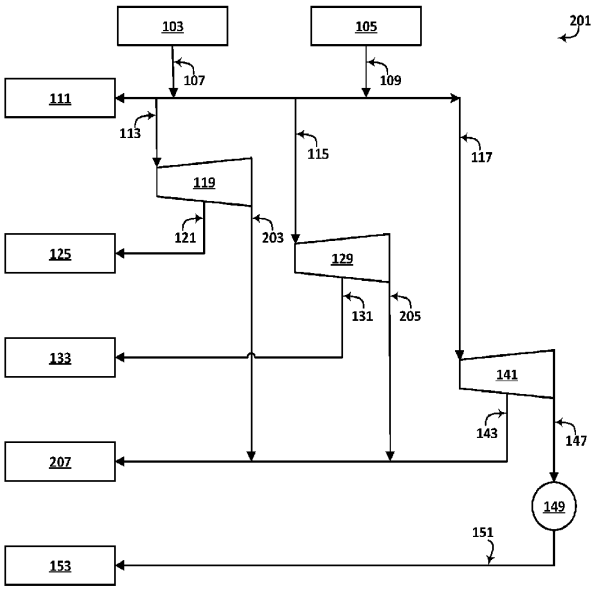

FIG. 2

(57) Abstract: An exhaust steam stream having an absolute pressure from 200 kPa to 1,050 kPa and shaft power are produced from an extraction turbine and/or a back-pressure turbine. Tire exhaust steam stream can be supplied to an amine regenerator of an amine CO_2, separation process. The shaft power can be utilized to drive equipment in a hydrocarbon processing plant such as an olefins production plant.

[Continued on next page]

WO 2023/049576 A1

TR), OAPI (BF, BJ, CF, CG, CI, CM, GA, GN, GQ, GW, KM, ML, MR, NE, SN, TD, TG).

Declarations under Rule 4.17:

— *as to applicant's entitlement to apply for and be granted a patent (Rule 4.17(ii))*

— *as to the applicant's entitlement to claim the priority of the earlier application (Rule 4.17(iii))*

Published:

— *with international search report (Art. 21(3))*