FIG. 1

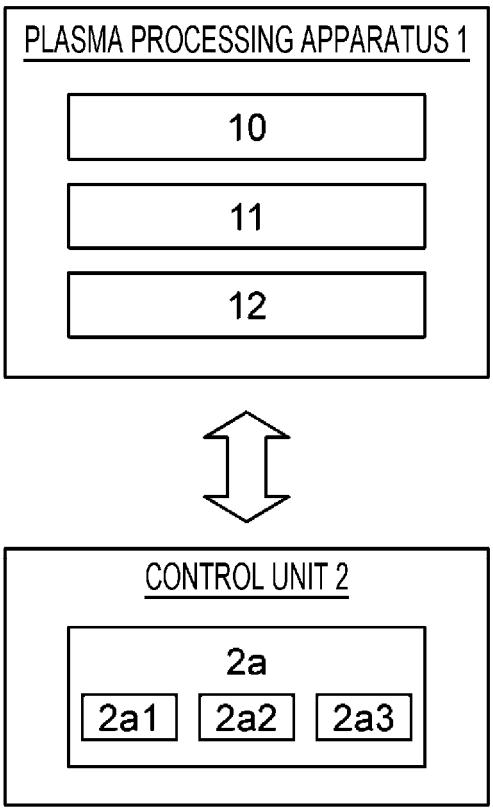
PLASMA PROCESSING APPARATUS 1
10
11
12
CONTROL UNIT 2
2a
2a1
2a2
2a3

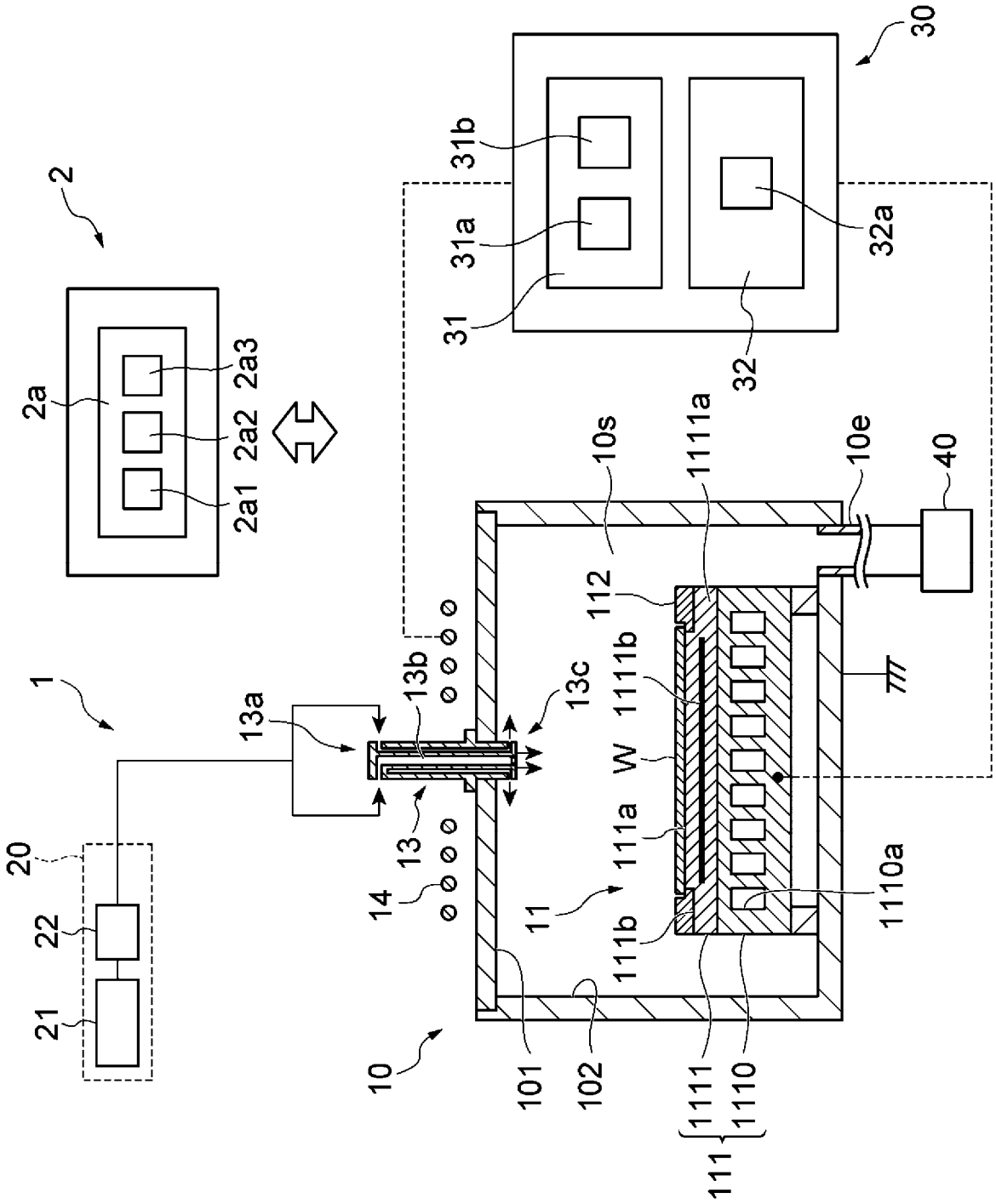
2
2a
2a3
2a2
2a1
30
31b
31a
31
32a
32
1
13a
13b
13c
13
14
20
22
21
10
10s
1111a
10e
40
112
1111b
W
111a
11
111b
1110a
101
102
1111
1110
111

FIG. 2

FIG. 3

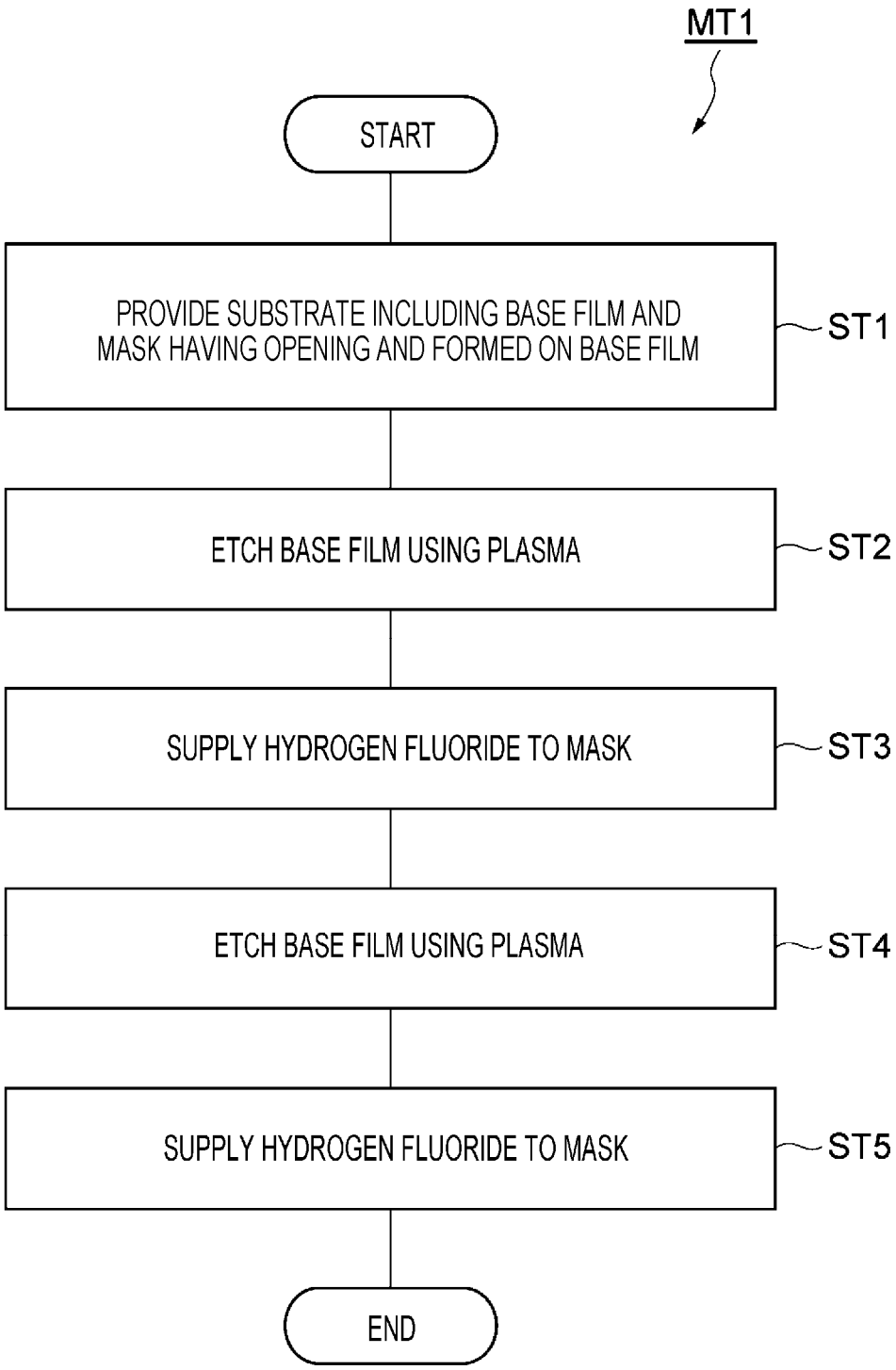
MT1
START
PROVIDE SUBSTRATE INCLUDING BASE FILM AND MASK HAVING OPENING AND FORMED ON BASE FILM
ST1
ETCH BASE FILM USING PLASMA
ST2
SUPPLY HYDROGEN FLUORIDE TO MASK
ST3
ETCH BASE FILM USING PLASMA
ST4
SUPPLY HYDROGEN FLUORIDE TO MASK
ST5
END

FIG. 4

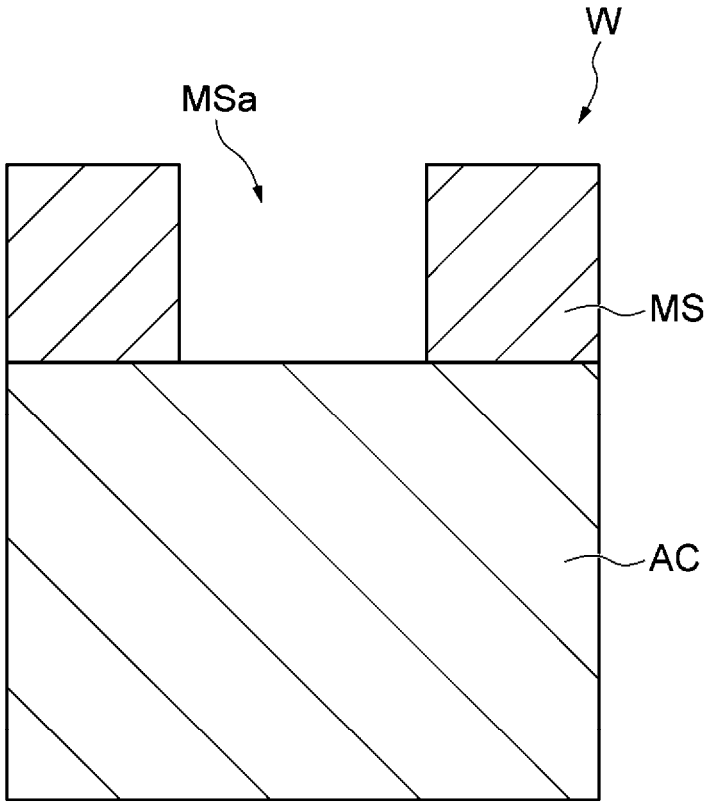

FIG. 5

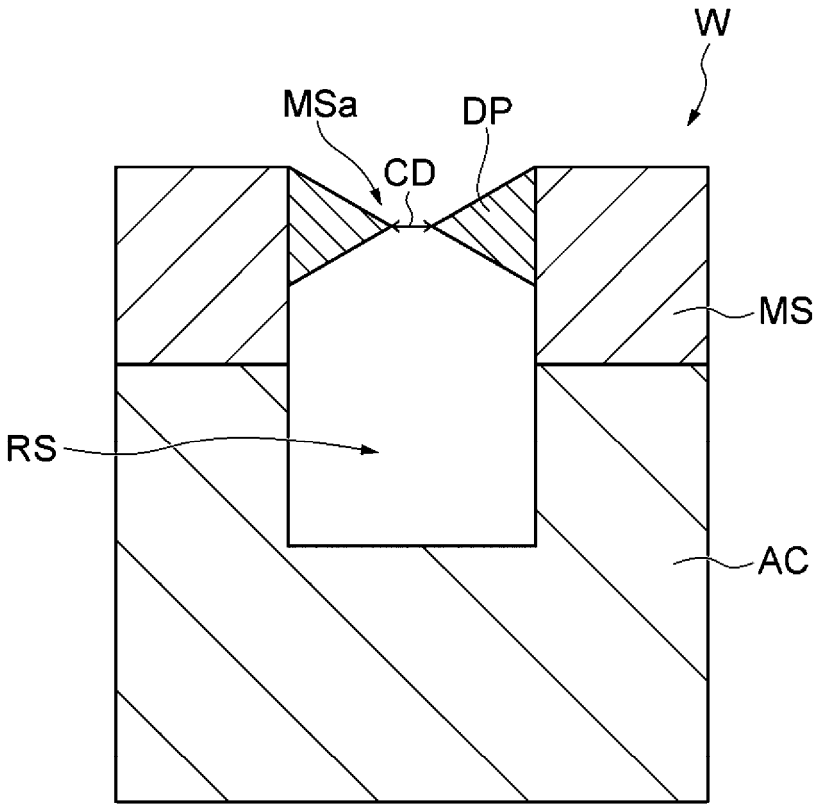

FIG. 6

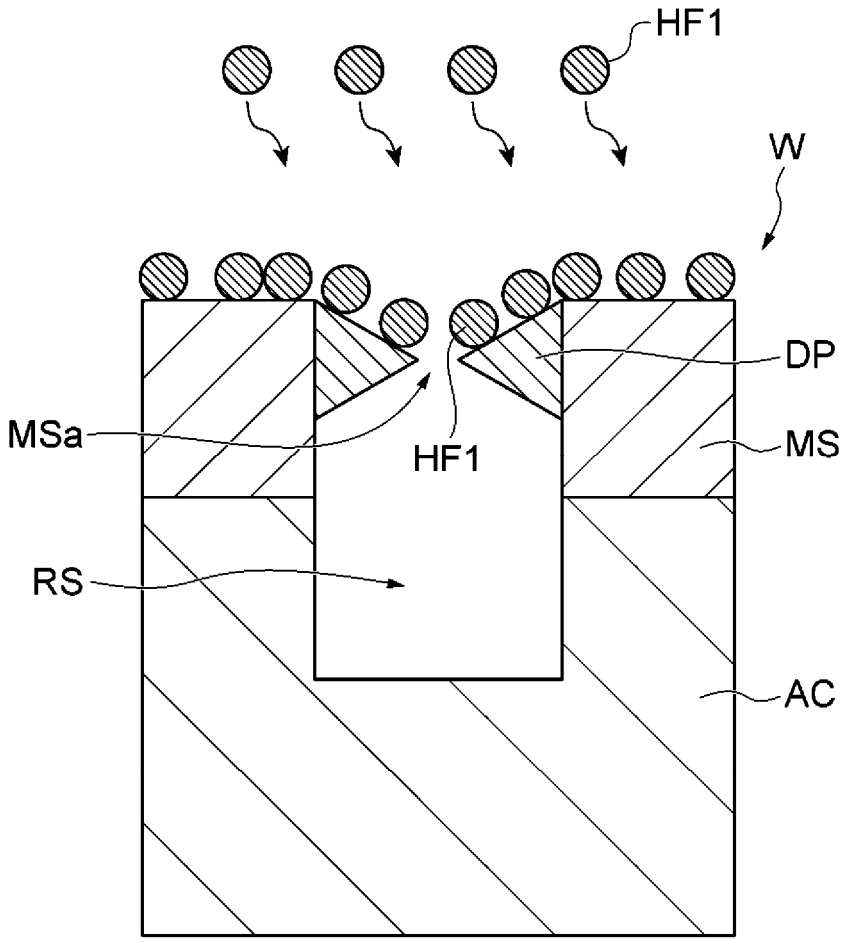

FIG. 7

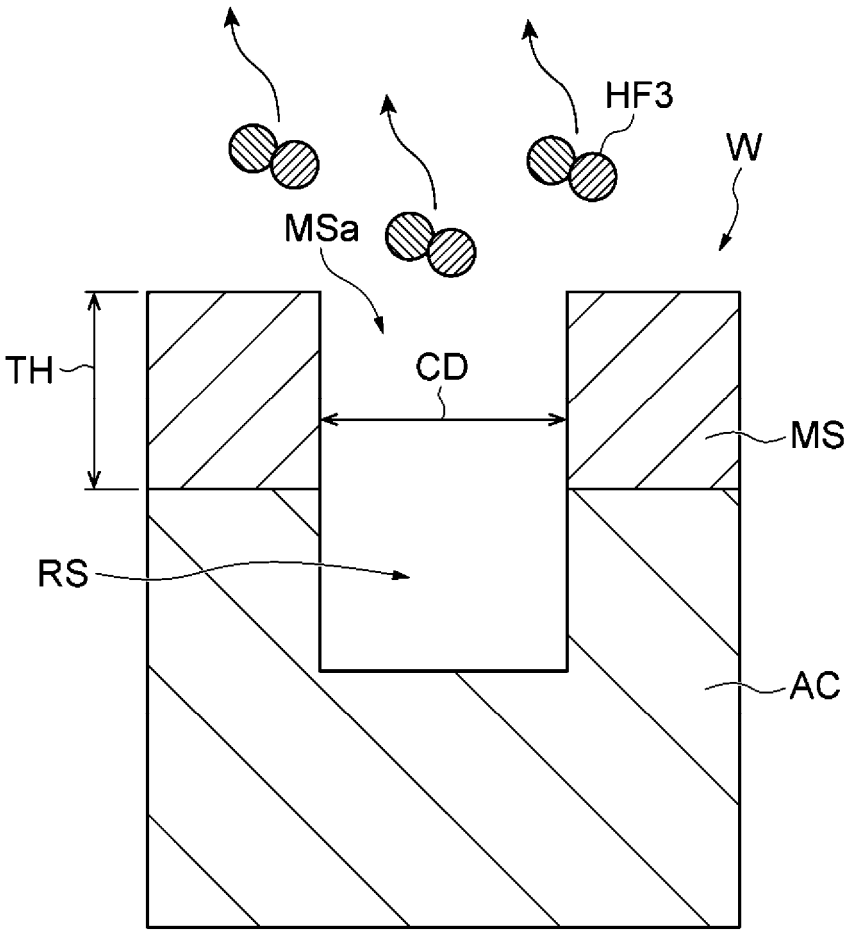

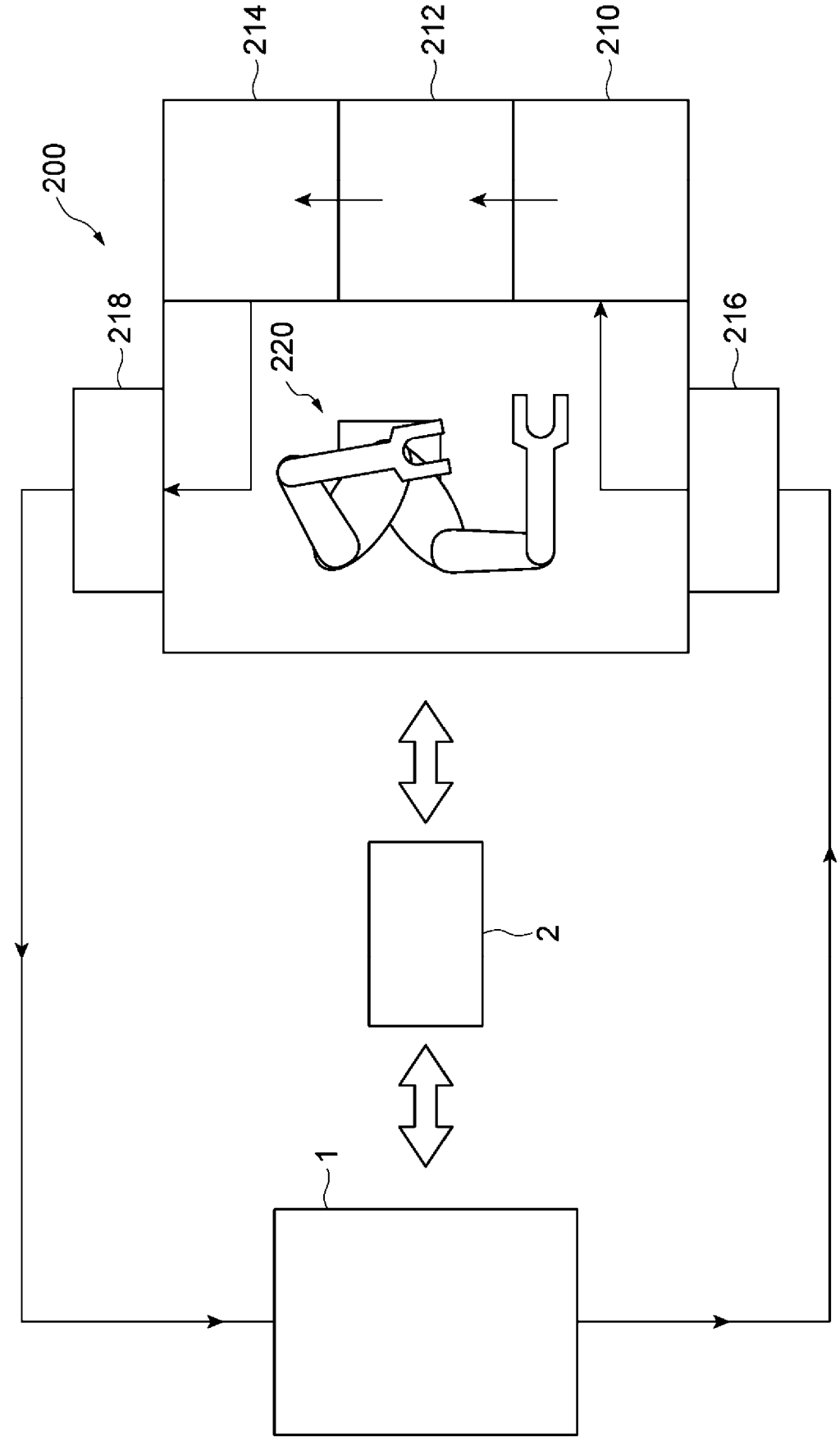

FIG. 8

FIG. 9

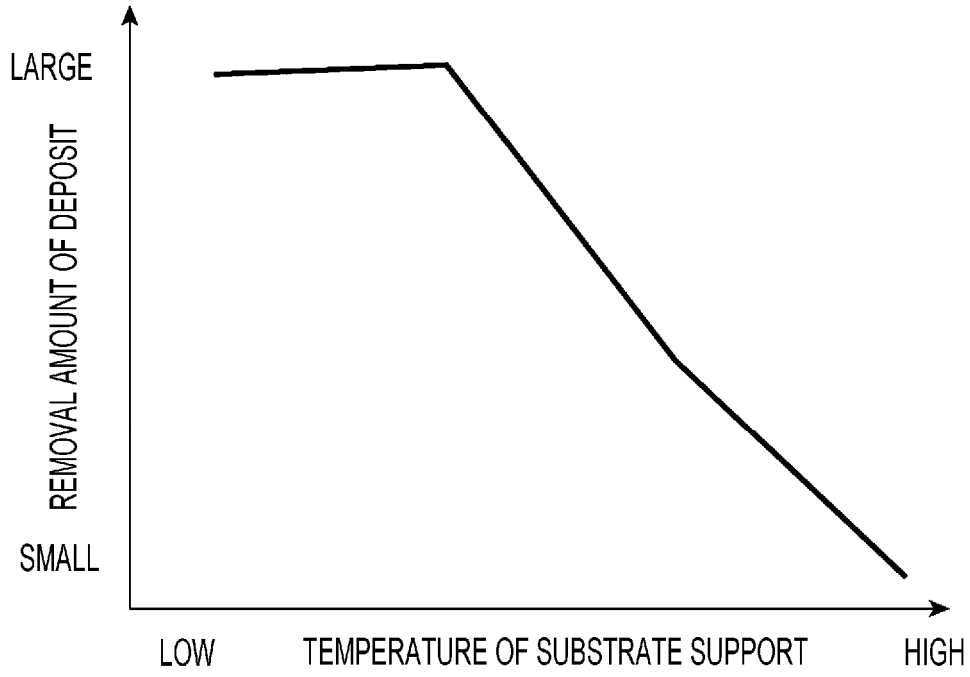
LARGE
REMOVAL AMOUNT OF DEPOSIT
SMALL
LOW
TEMPERATURE OF SUBSTRATE SUPPORT
HIGH

FIG. 10A

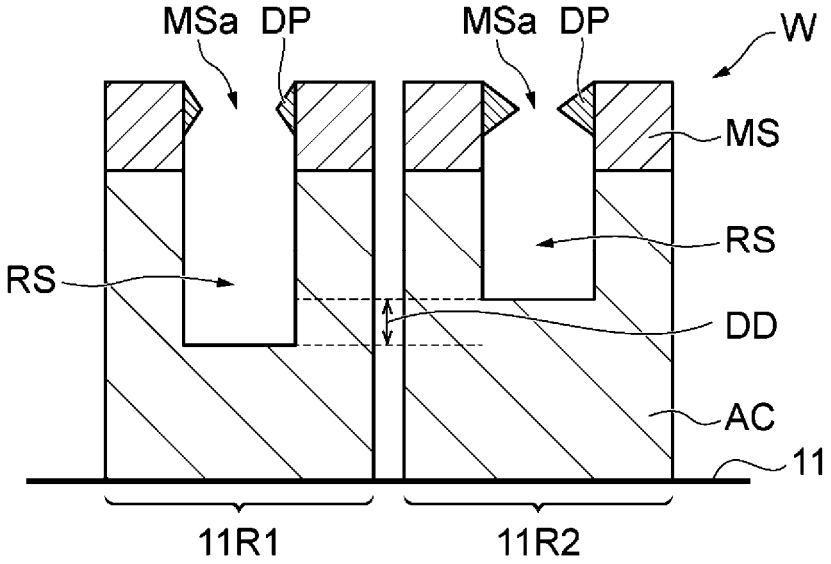

FIG. 10B

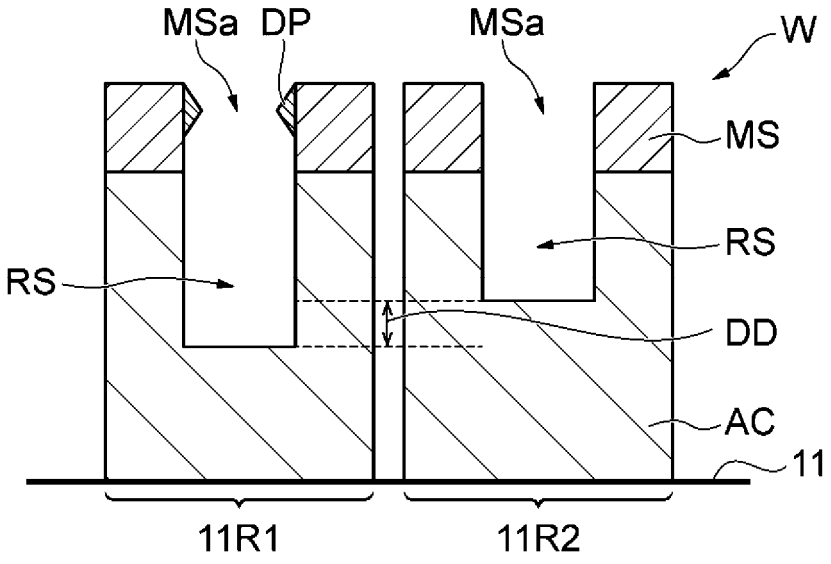

FIG. 10C

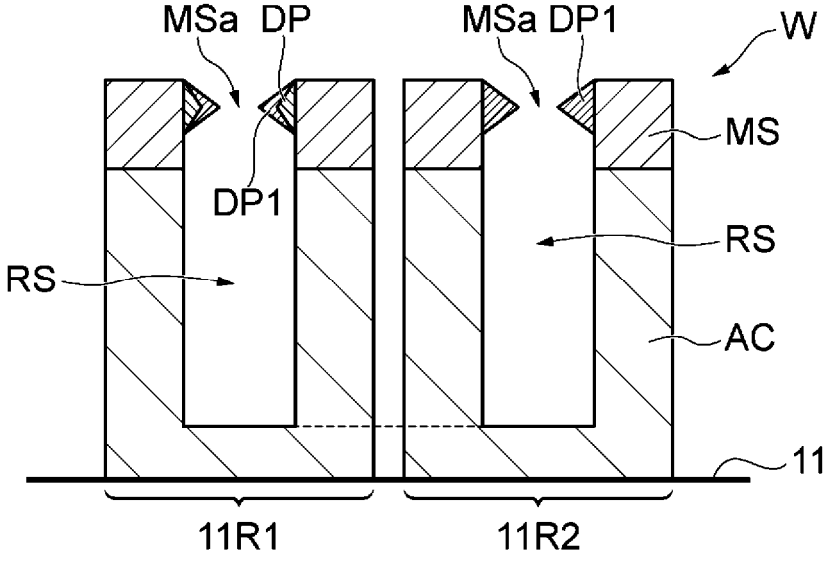

FIG. 11

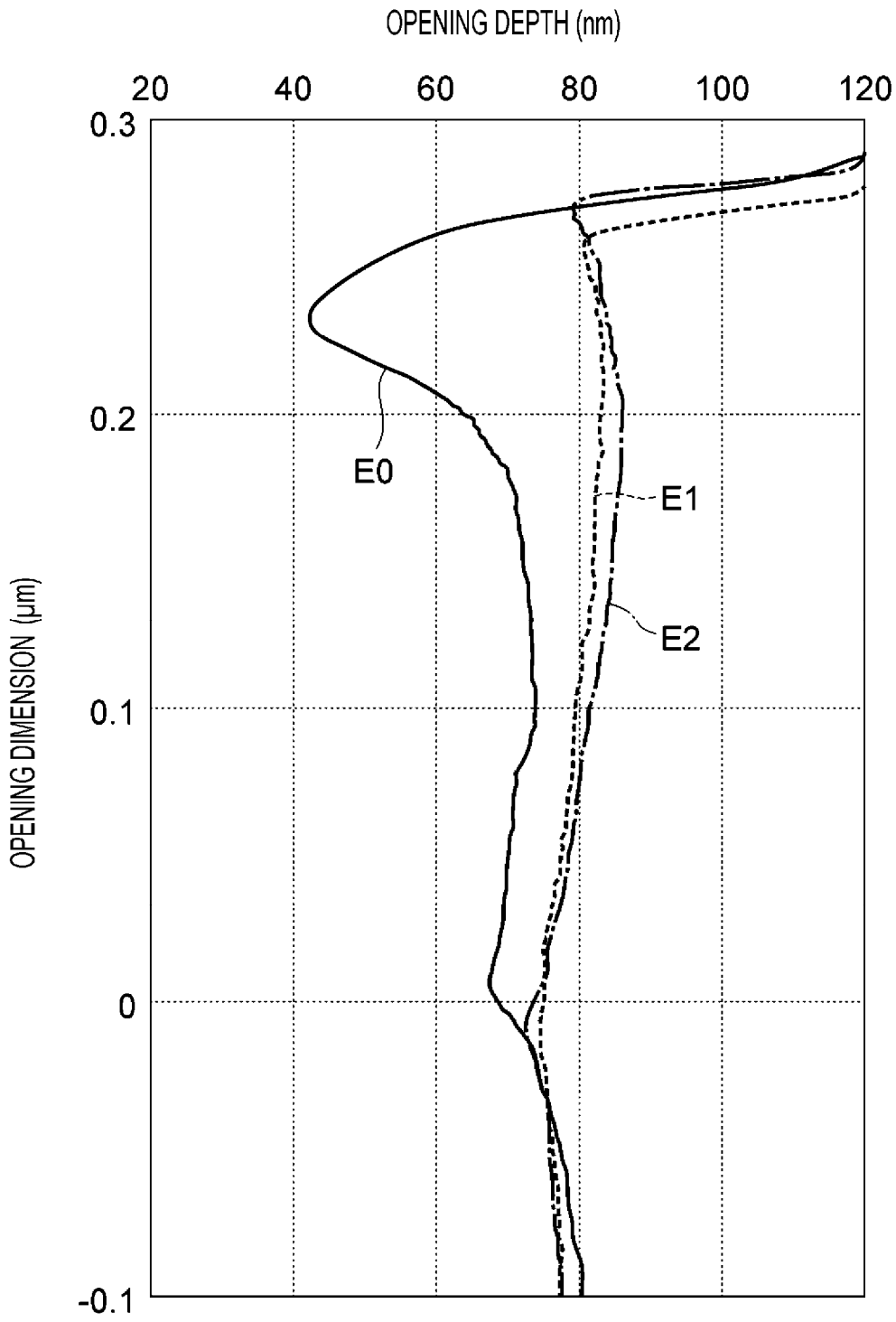
OPENING DEPTH (nm)
20
40
60
80
100
120
0.3
0.2
0.1
0
-0.1
OPENING DIMENSION (μm)
E0
E1
E2

FIG. 12

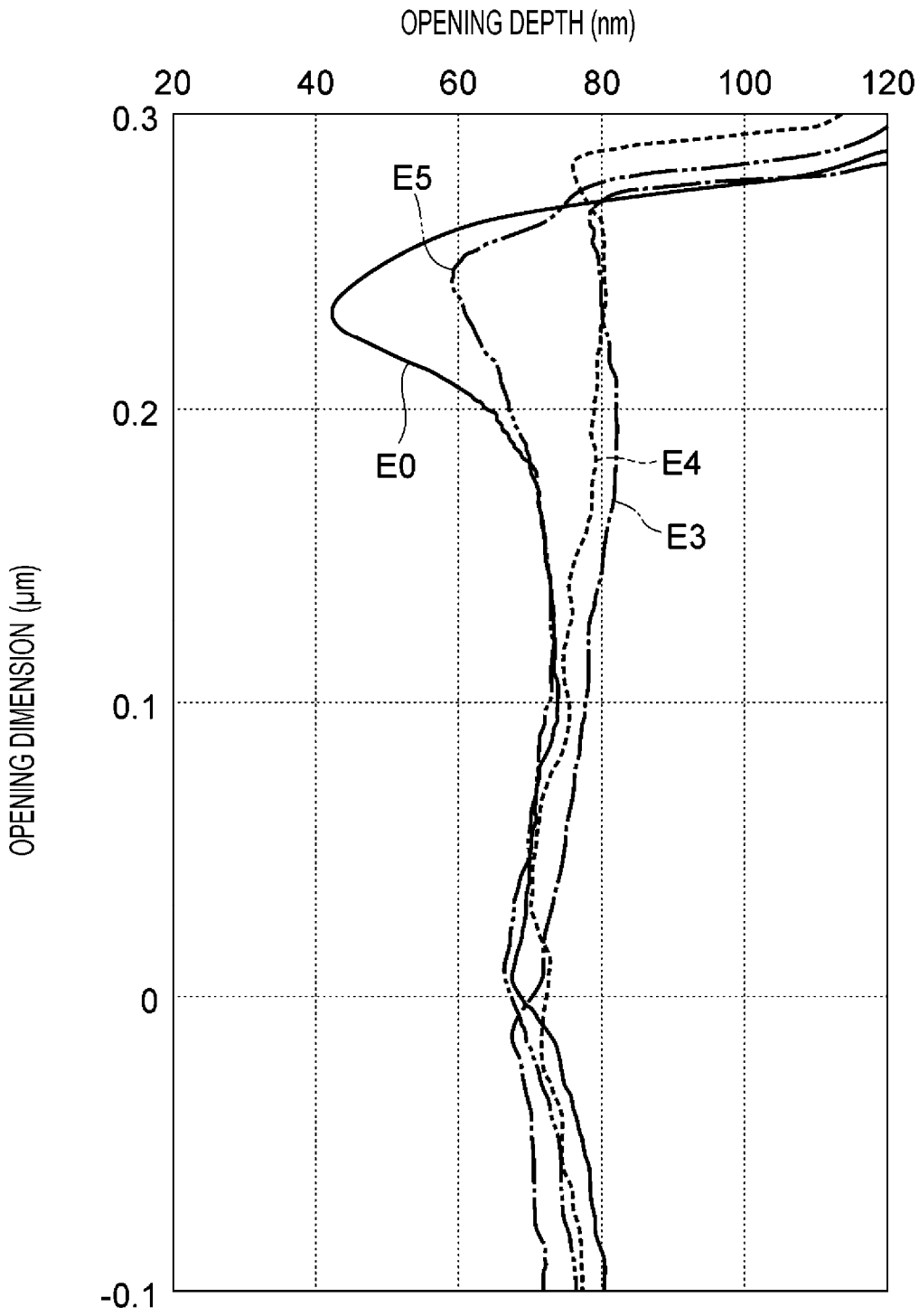
OPENING DEPTH (nm)
20
40
60
80
100
120
0.3
0.2
0.1
0
-0.1
OPENING DIMENSION (μm)
E5
E0
E4
E3

FIG. 13

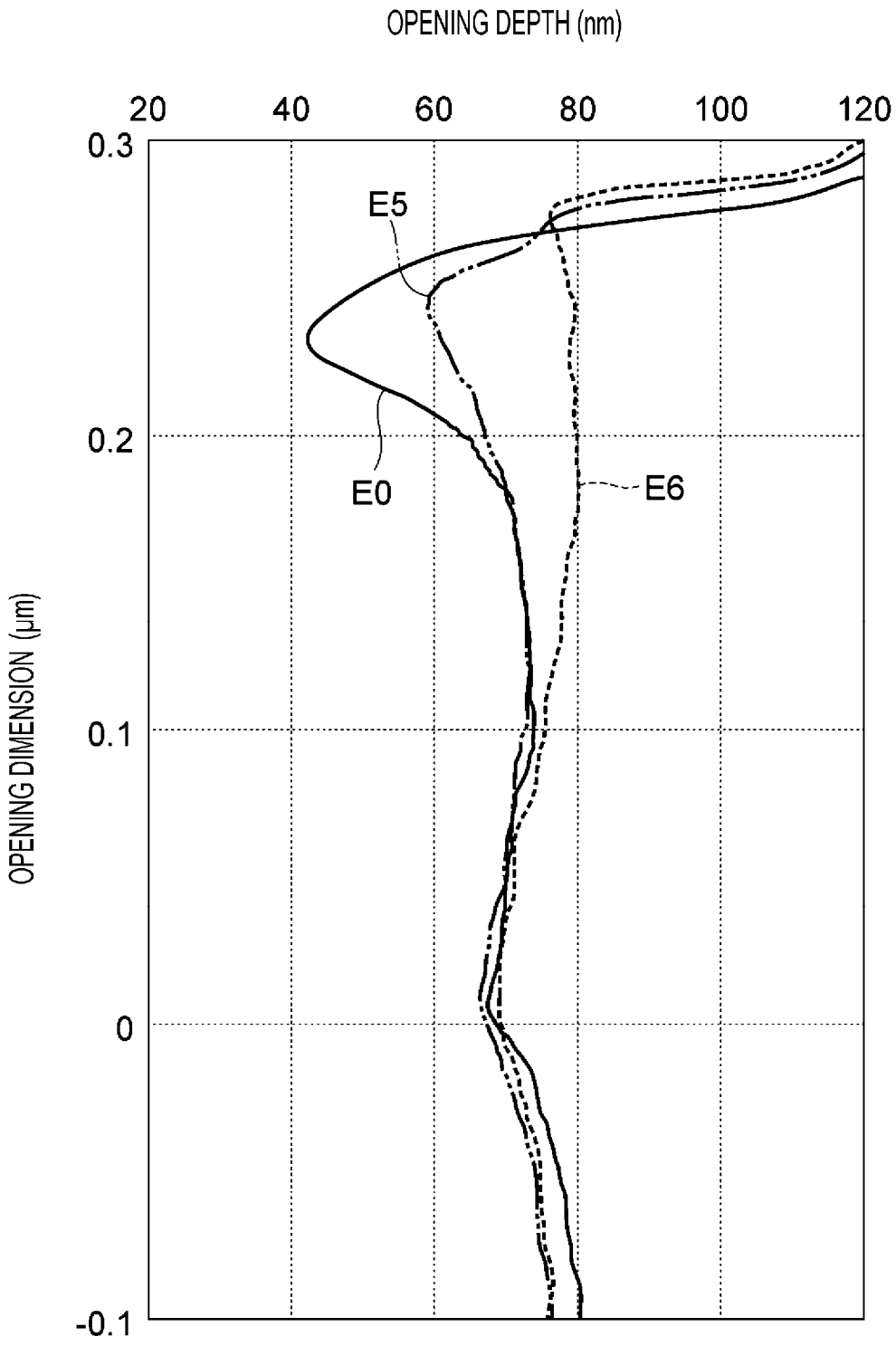
OPENING DEPTH (nm)
20
40
60
80
100
120
0.3
0.2
0.1
0
-0.1
OPENING DIMENSION (μm)
E5
E0
E6

FIG. 14

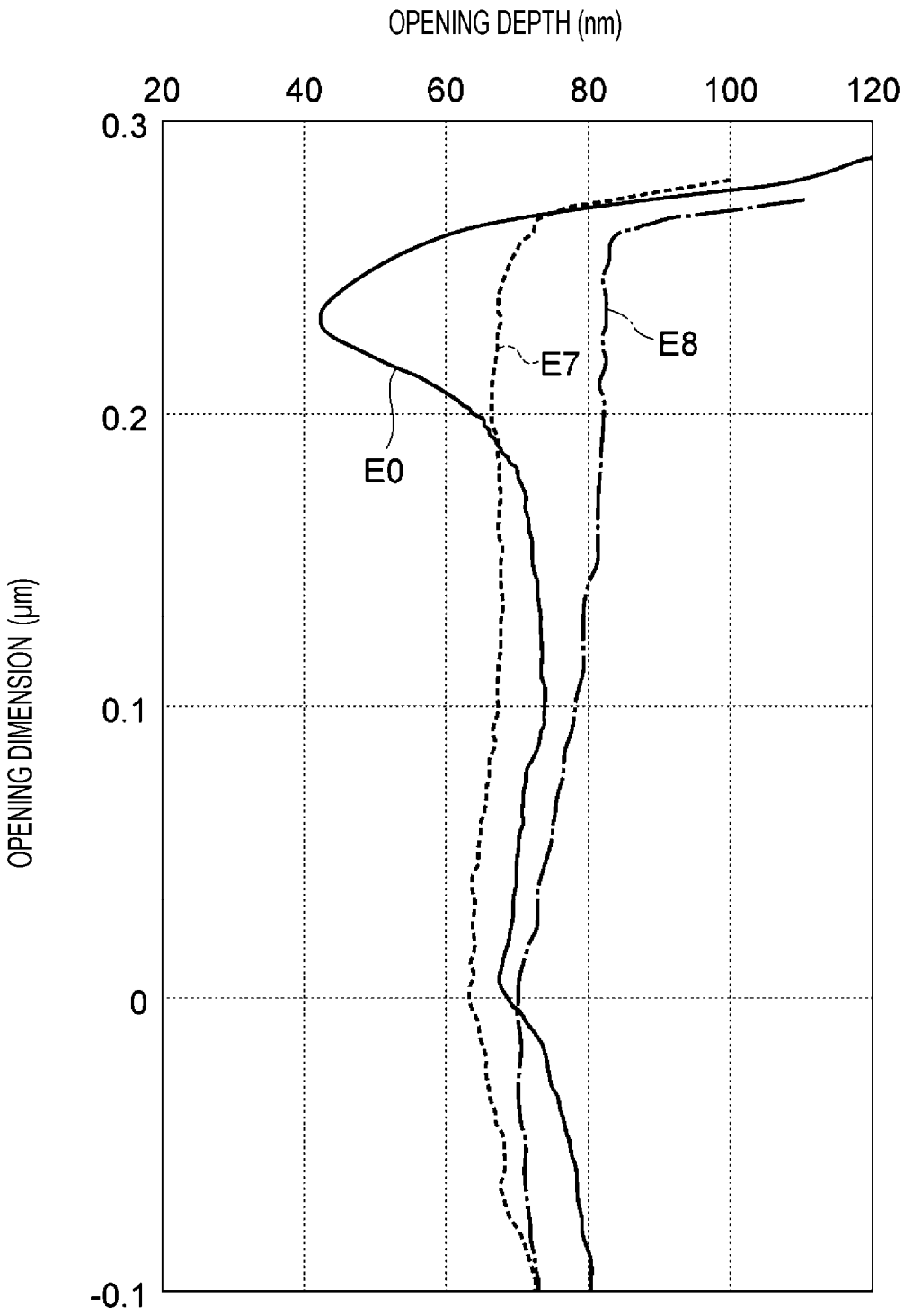
OPENING DEPTH (nm)
20
40
60
80
100
120
0.3
0.2
0.1
0
-0.1
OPENING DIMENSION (μm)
E0
E7
E8

FIG. 15

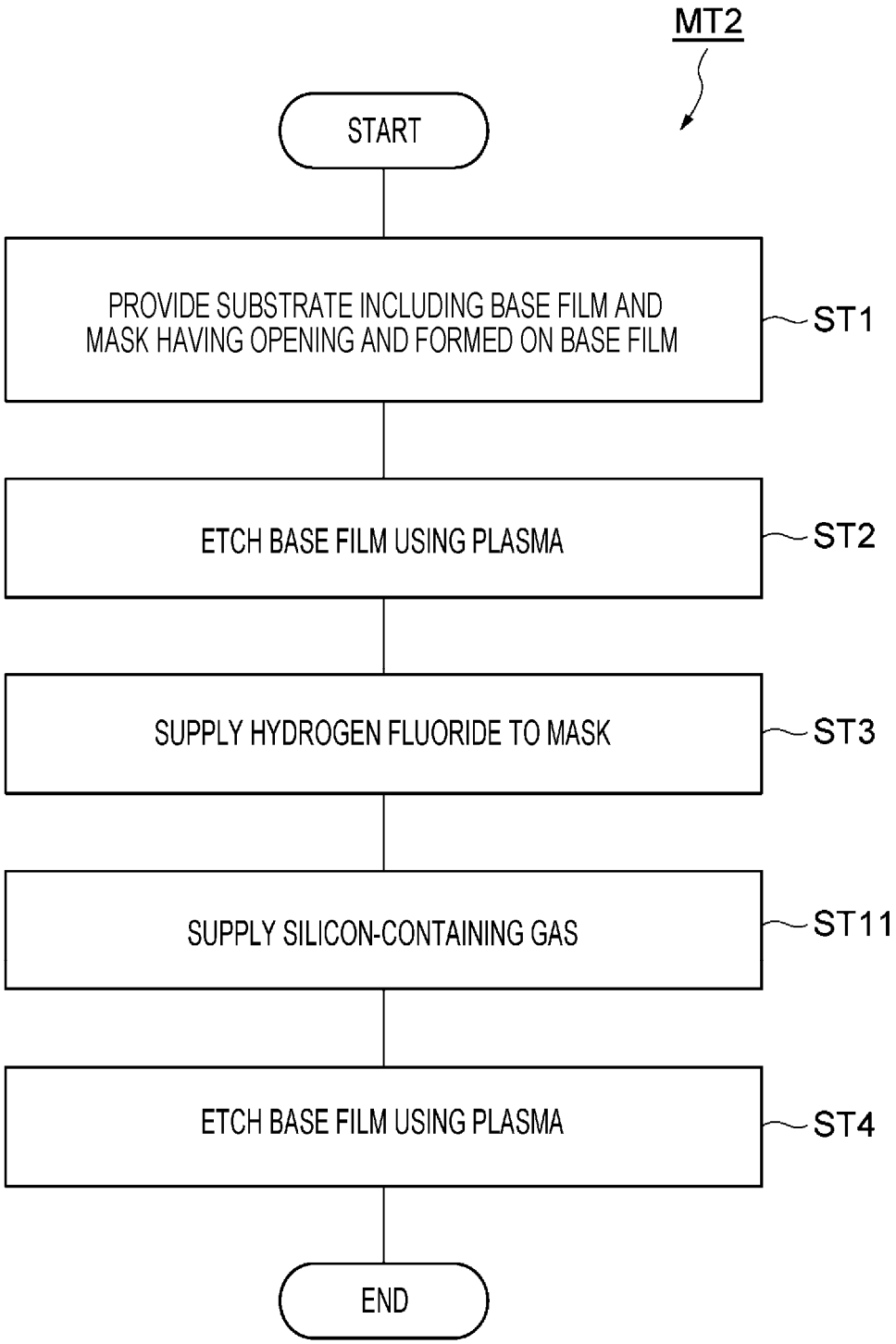
MT2
START
PROVIDE SUBSTRATE INCLUDING BASE FILM AND MASK HAVING OPENING AND FORMED ON BASE FILM
ST1
ETCH BASE FILM USING PLASMA
ST2
SUPPLY HYDROGEN FLUORIDE TO MASK
ST3
SUPPLY SILICON-CONTAINING GAS
ST11
ETCH BASE FILM USING PLASMA
ST4
END

FIG. 16

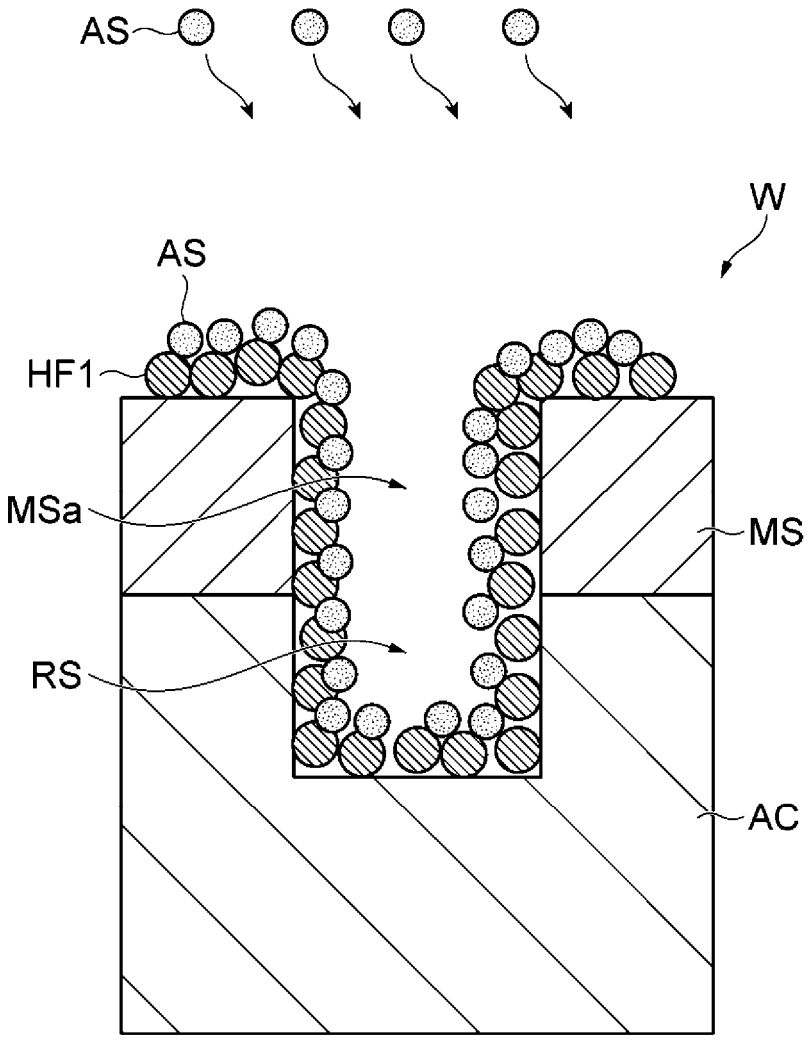

FIG. 17

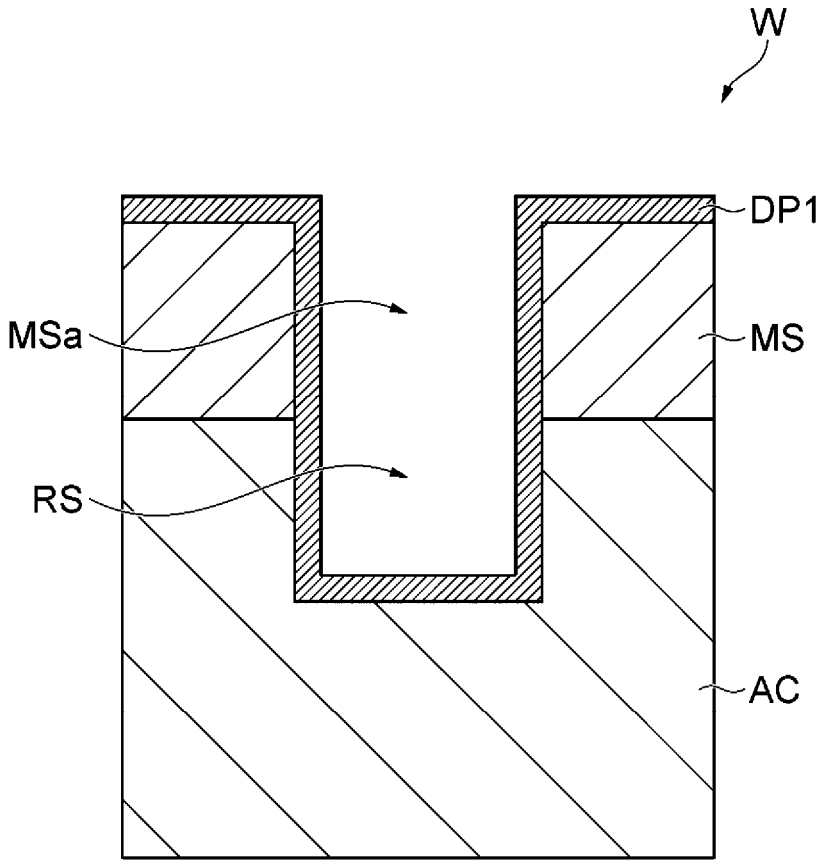

FIG. 18A

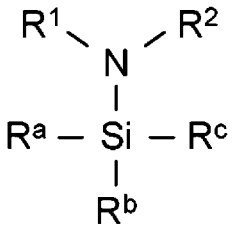

FIG. 18B

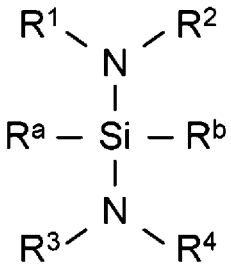

FIG. 18C

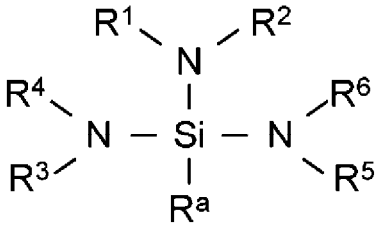

FIG. 18D

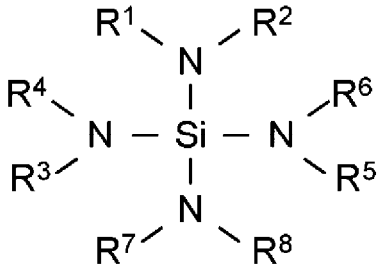

FIG. 19

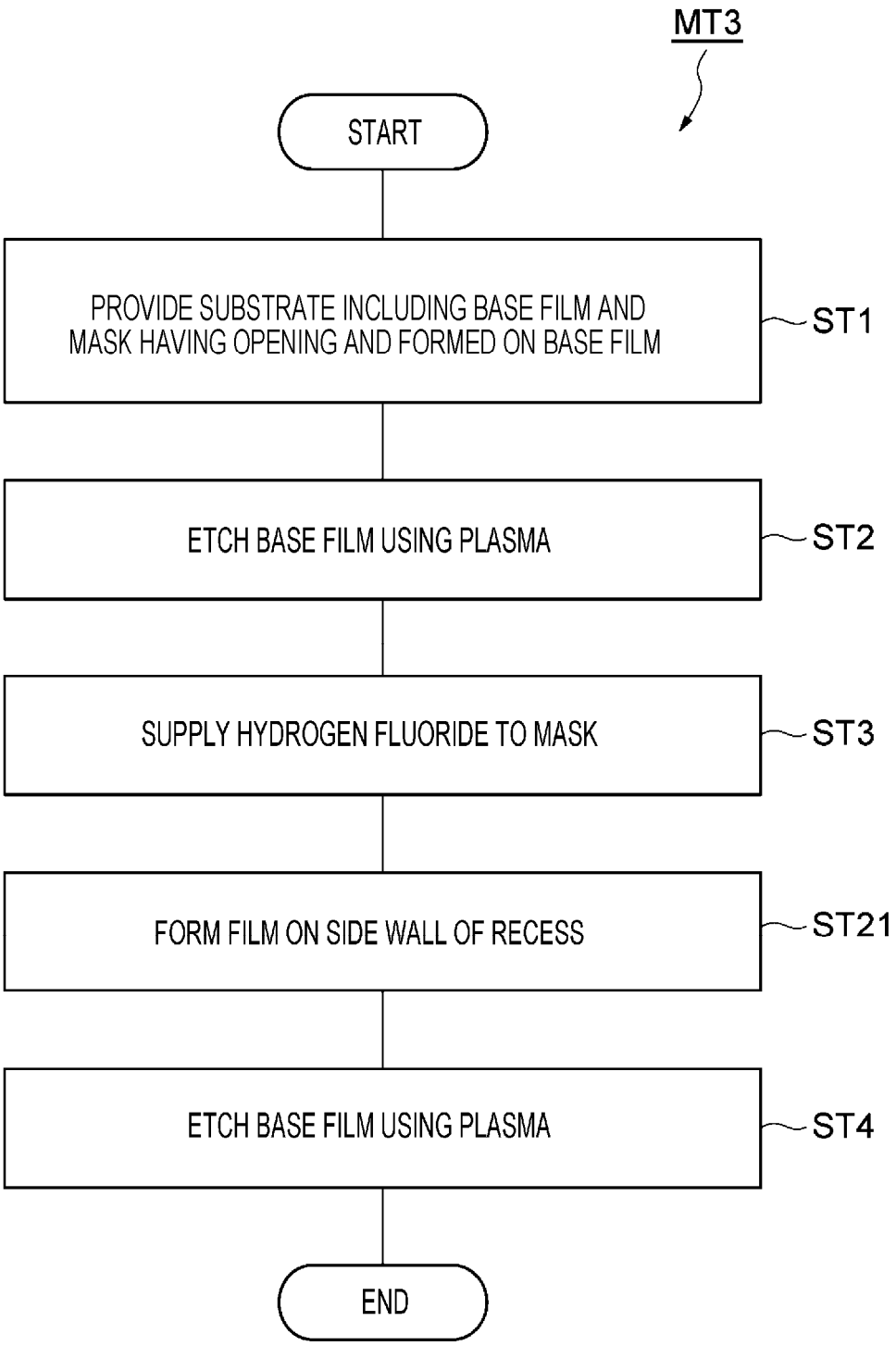
MT3
START
PROVIDE SUBSTRATE INCLUDING BASE FILM AND MASK HAVING OPENING AND FORMED ON BASE FILM
ST1
ETCH BASE FILM USING PLASMA
ST2
SUPPLY HYDROGEN FLUORIDE TO MASK
ST3
FORM FILM ON SIDE WALL OF RECESS
ST21
ETCH BASE FILM USING PLASMA
ST4
END

FIG. 20

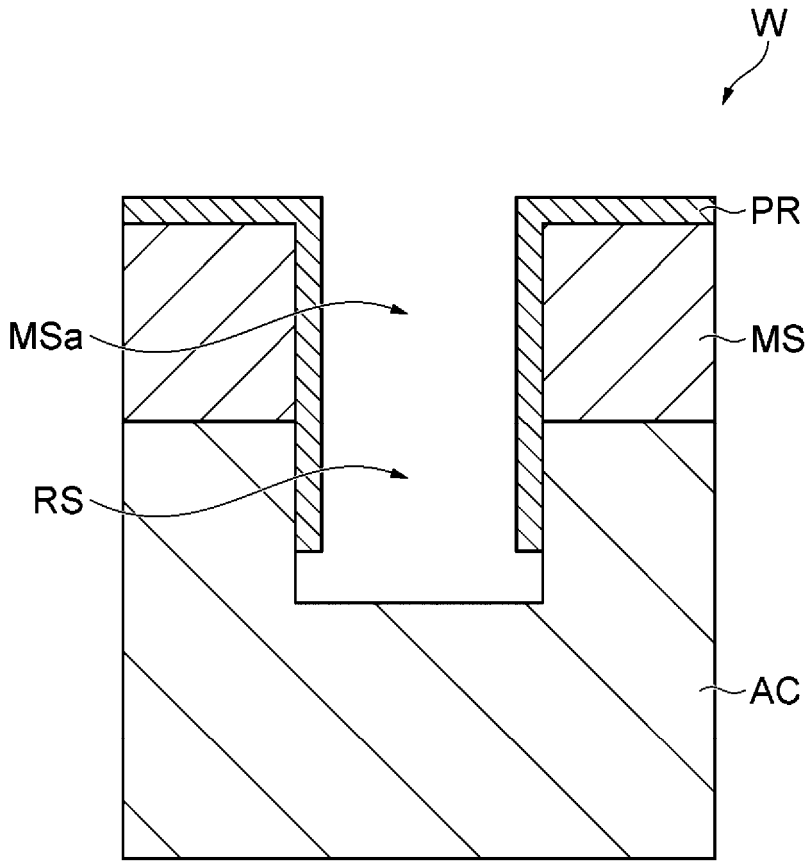

FIG. 21

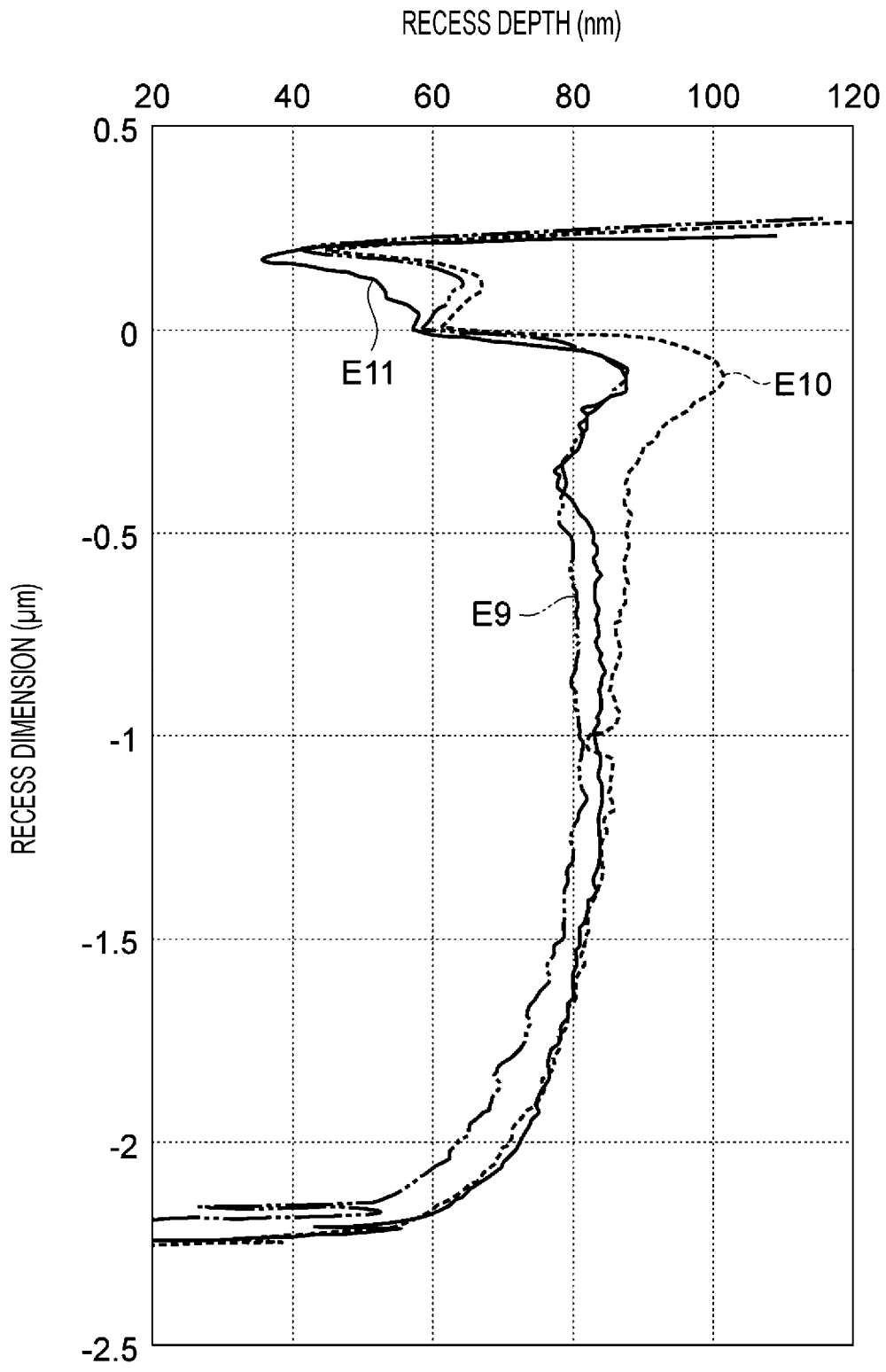
RECESS DEPTH (nm)
20
40
60
80
100
120
0.5
0
-0.5
-1
-1.5
-2
-2.5
RECESS DIMENSION (μm)
E11
E10
E9

FIG. 22

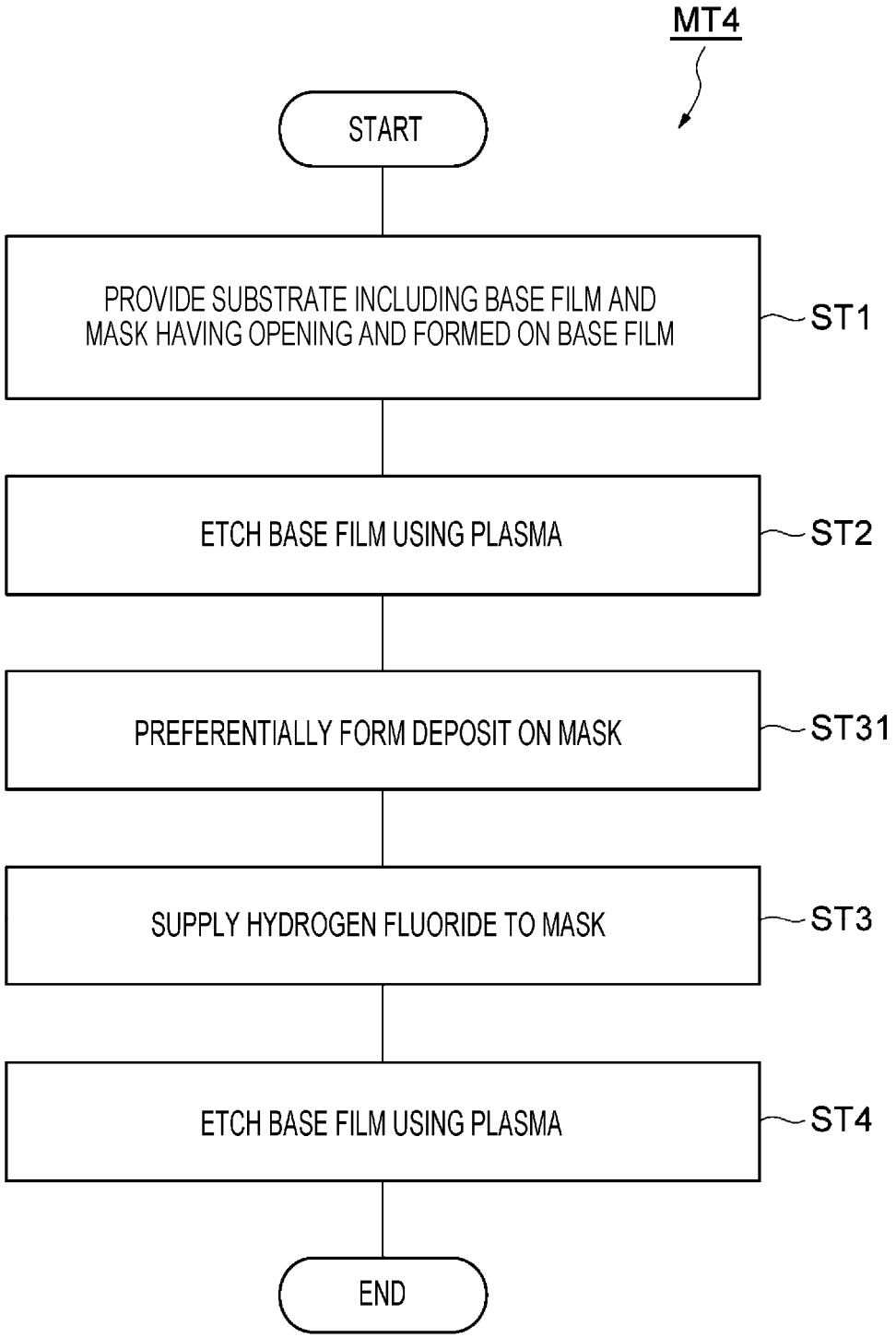
MT4
START
PROVIDE SUBSTRATE INCLUDING BASE FILM AND MASK HAVING OPENING AND FORMED ON BASE FILM
ST1
ETCH BASE FILM USING PLASMA
ST2
PREFERENTIALLY FORM DEPOSIT ON MASK
ST31
SUPPLY HYDROGEN FLUORIDE TO MASK
ST3
ETCH BASE FILM USING PLASMA
ST4
END

FIG. 23

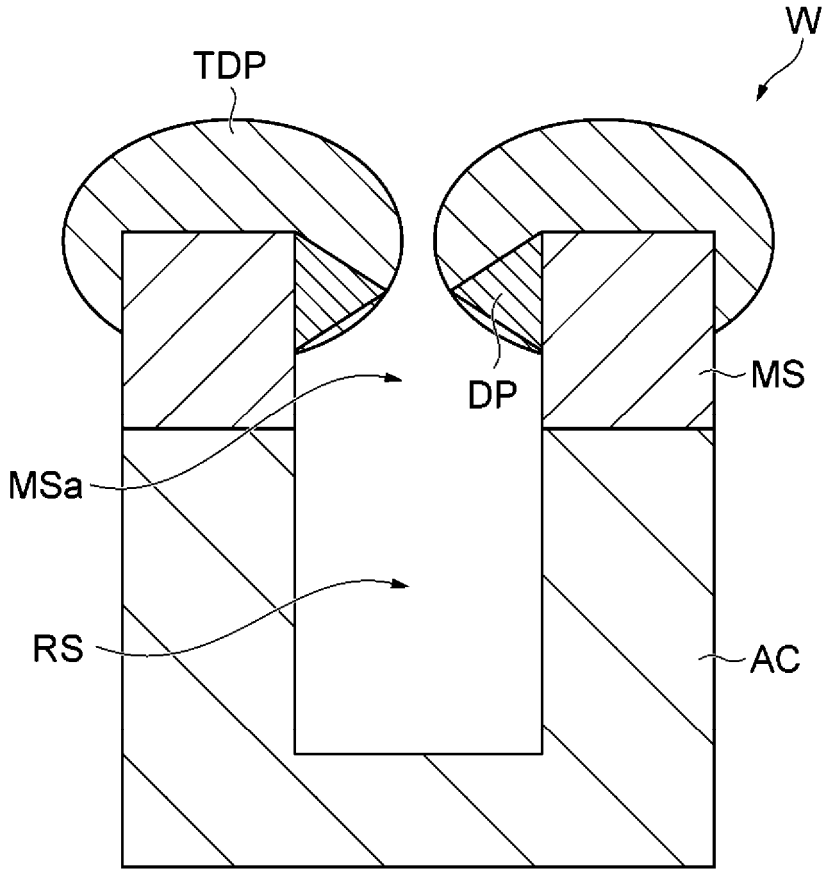

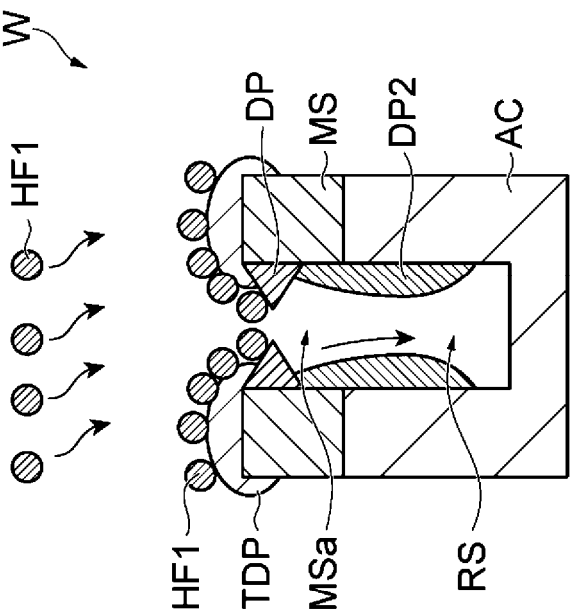

FIG. 24B

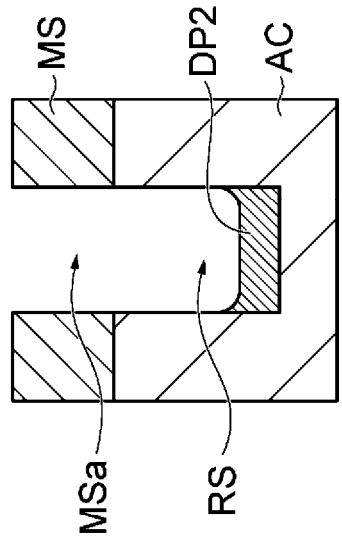

FIG. 24D

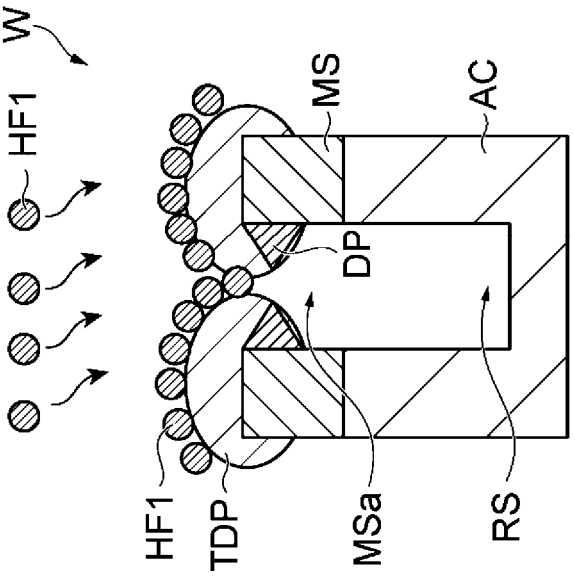

FIG. 24A

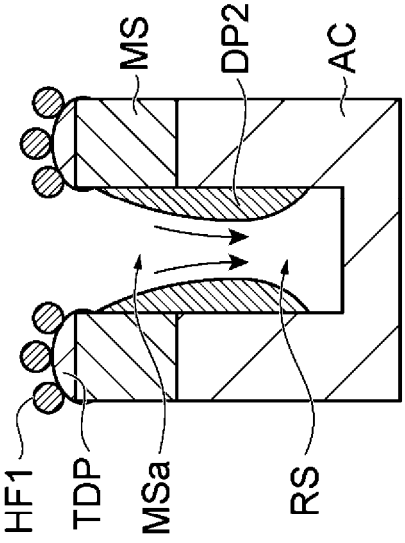

FIG. 24C

FIG. 25

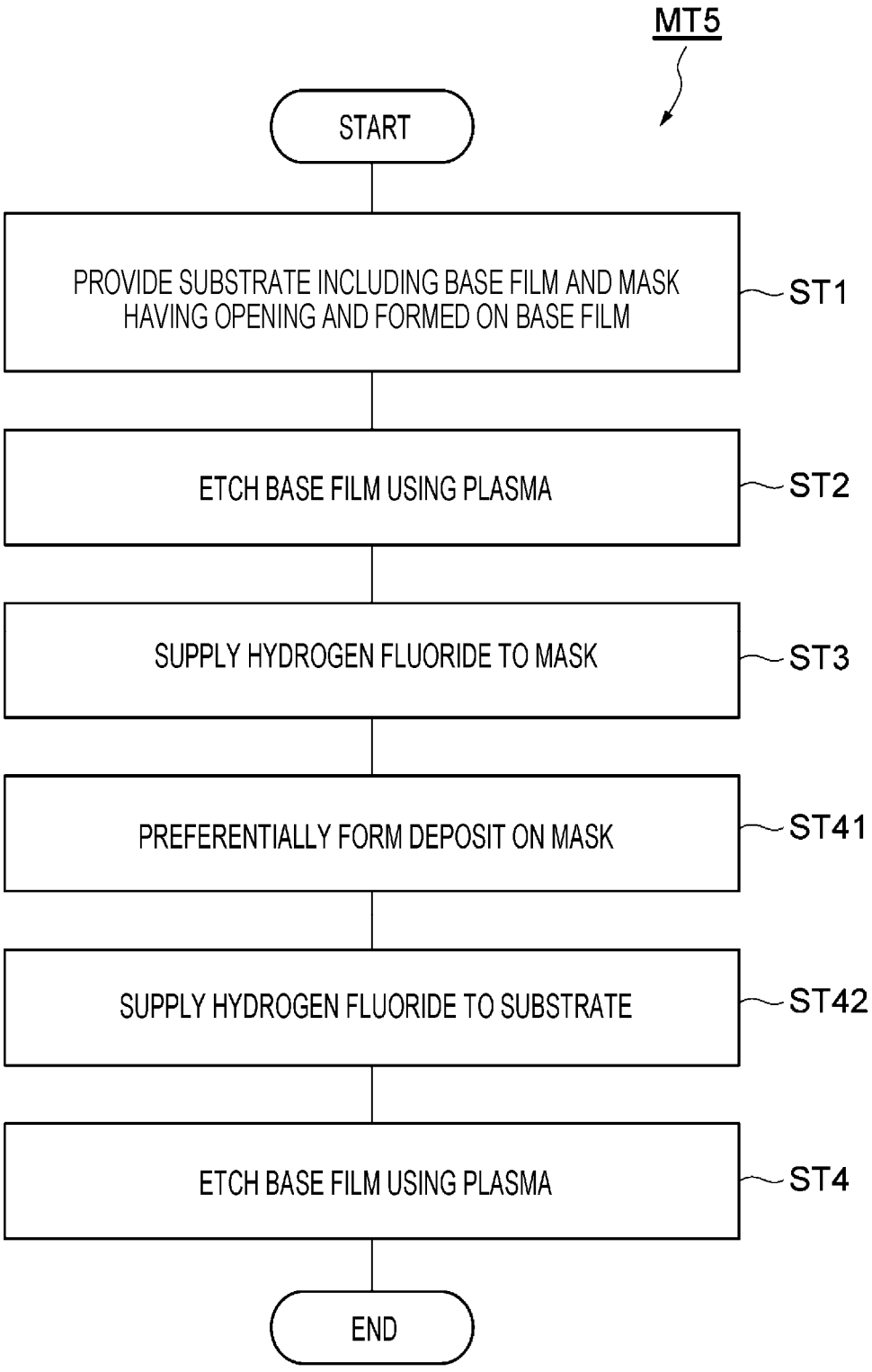
MT5
START
PROVIDE SUBSTRATE INCLUDING BASE FILM AND MASK HAVING OPENING AND FORMED ON BASE FILM
ST1
ETCH BASE FILM USING PLASMA
ST2
SUPPLY HYDROGEN FLUORIDE TO MASK
ST3
PREFERENTIALLY FORM DEPOSIT ON MASK
ST41
SUPPLY HYDROGEN FLUORIDE TO SUBSTRATE
ST42
ETCH BASE FILM USING PLASMA
ST4
END

FIG. 26

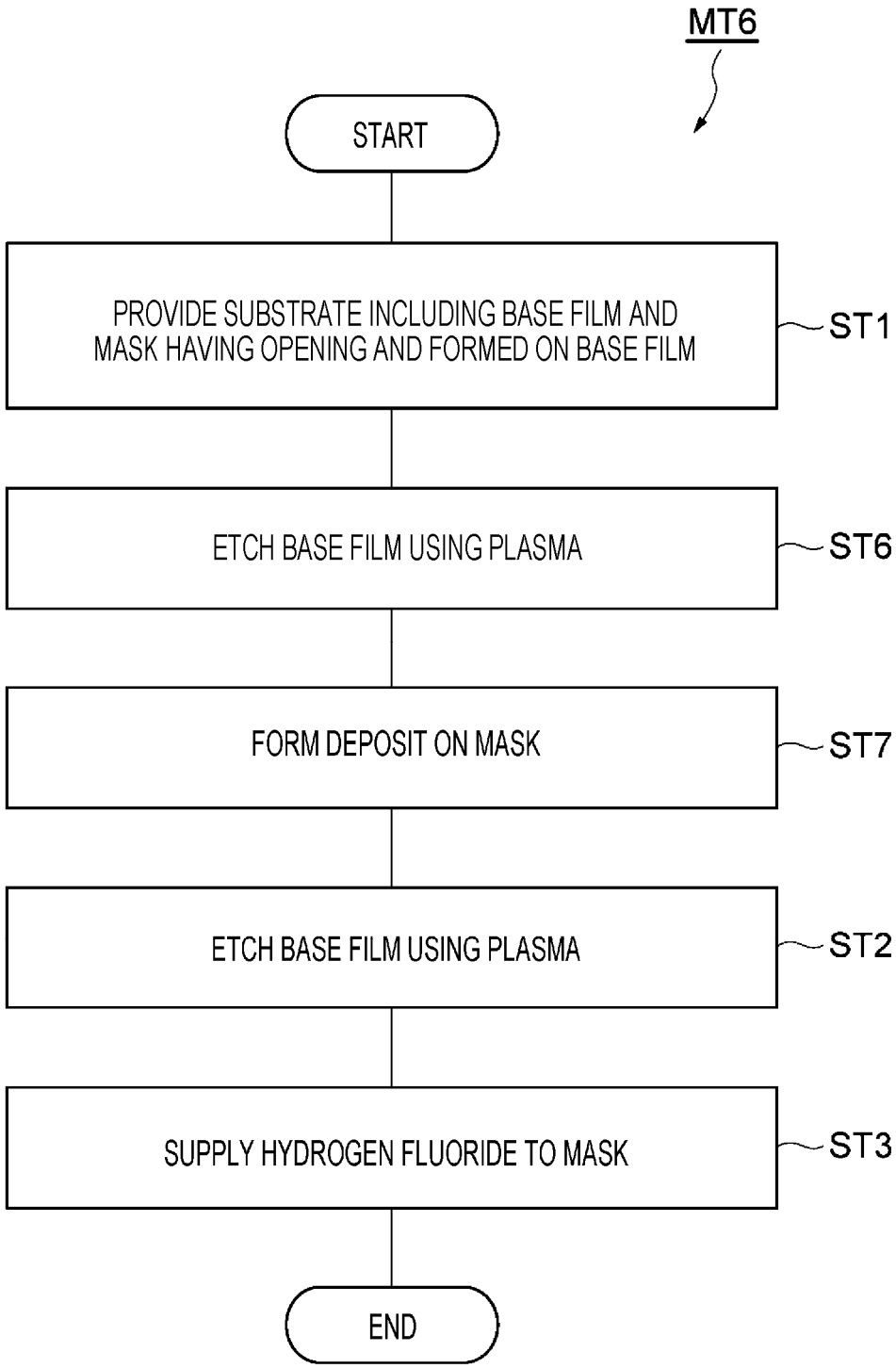
MT6
START
PROVIDE SUBSTRATE INCLUDING BASE FILM AND MASK HAVING OPENING AND FORMED ON BASE FILM
ST1
ETCH BASE FILM USING PLASMA
ST6
FORM DEPOSIT ON MASK
ST7
ETCH BASE FILM USING PLASMA
ST2
SUPPLY HYDROGEN FLUORIDE TO MASK
ST3
END

FIG. 27

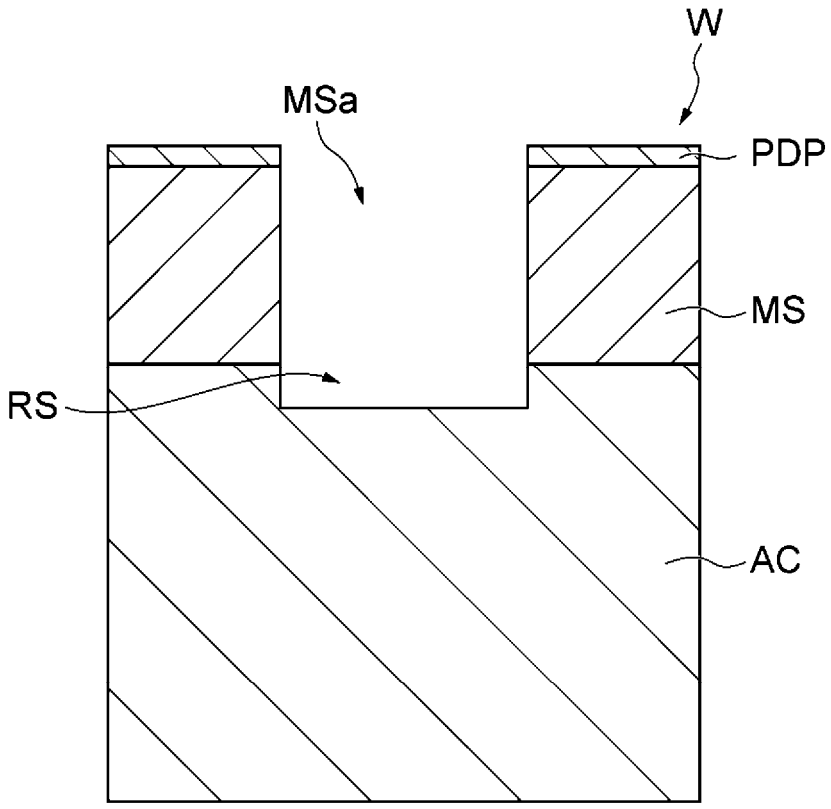

FIG. 28

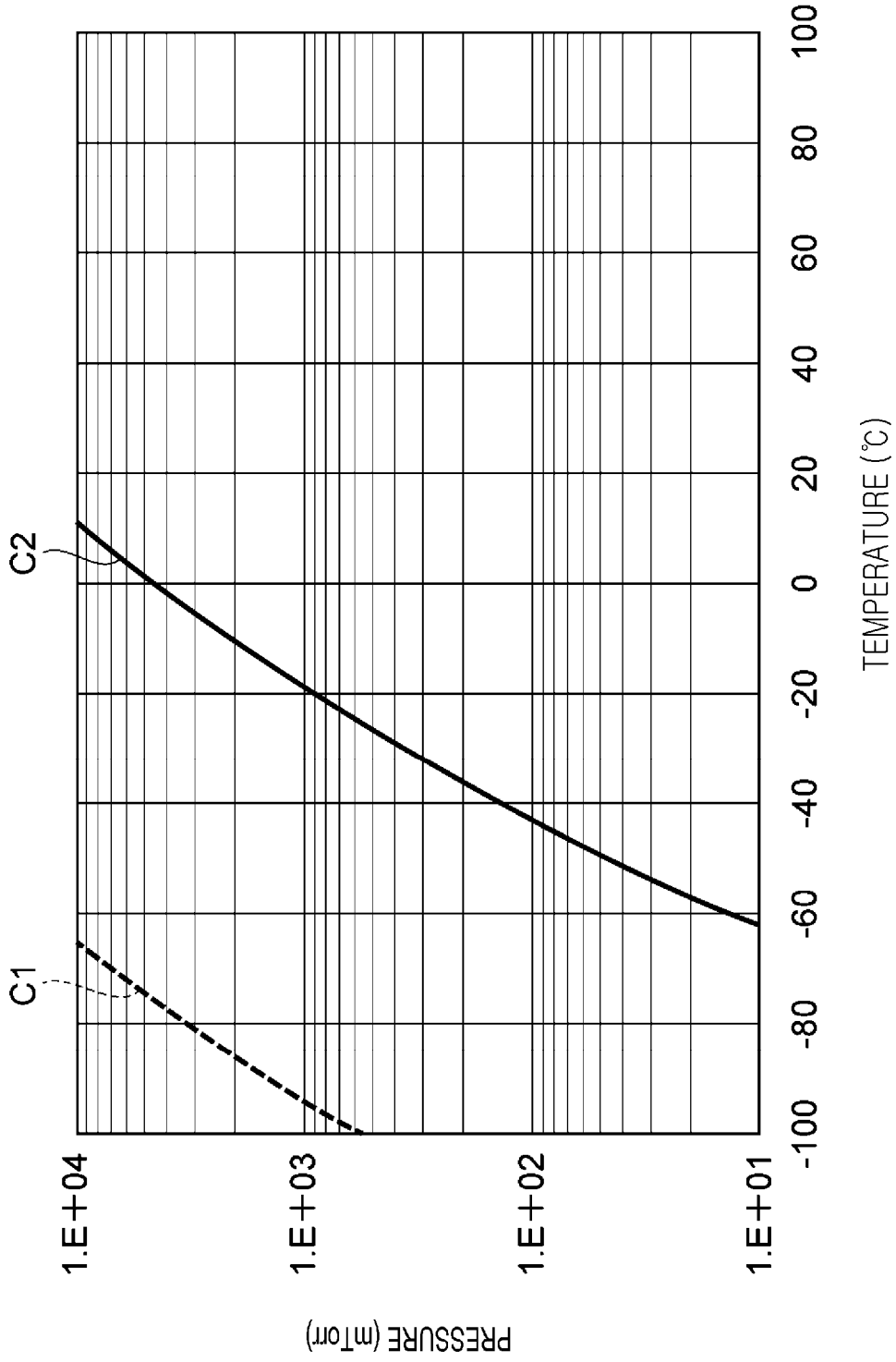
C1
C2
1.E+04
1.E+03
1.E+02
1.E+01
PRESSURE (mTorr)
-100
-80
-60
-40
-20
0
20
40
60
80
100
TEMPERATURE (℃)

FIG. 29

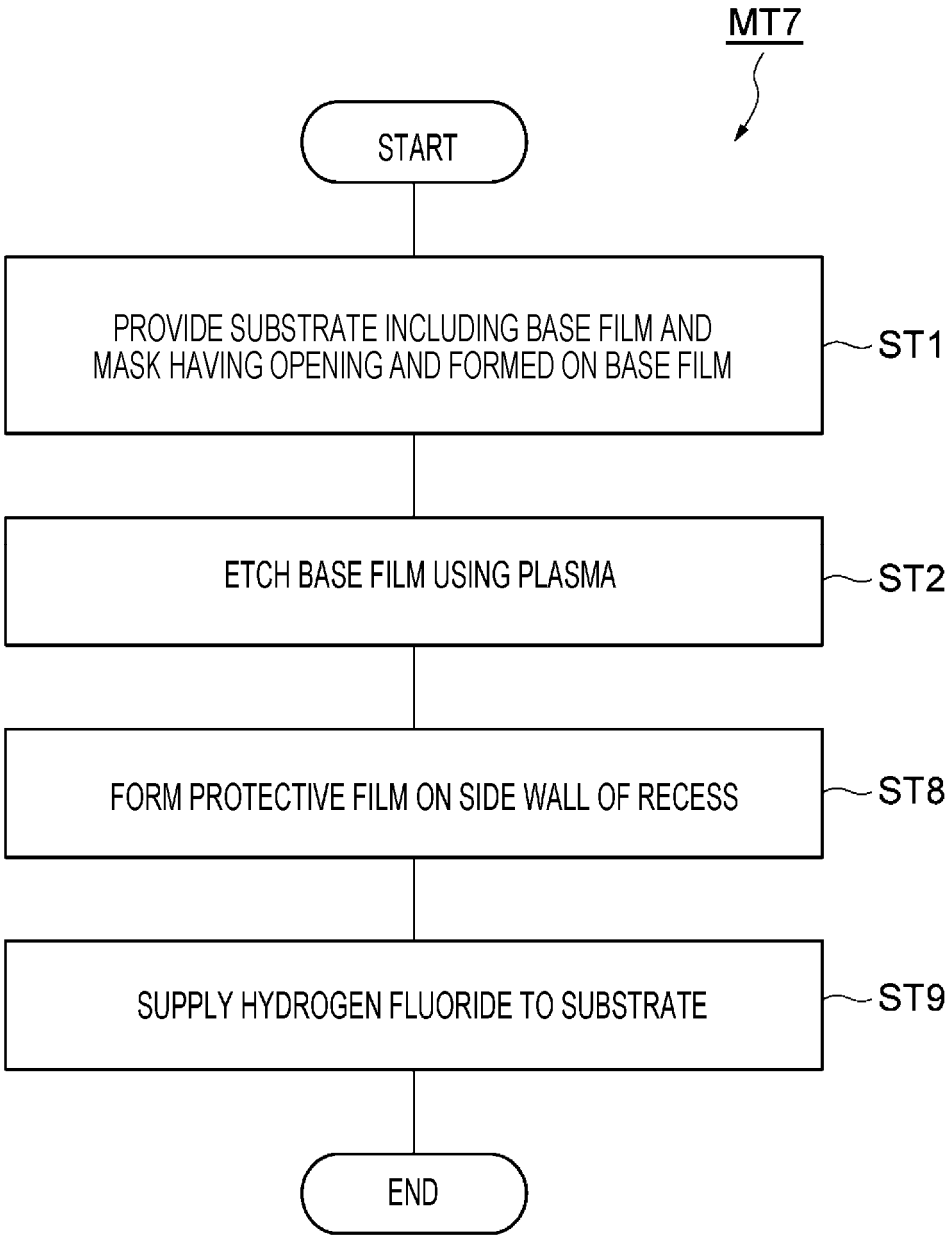
MT7
START
PROVIDE SUBSTRATE INCLUDING BASE FILM AND MASK HAVING OPENING AND FORMED ON BASE FILM
ST1
ETCH BASE FILM USING PLASMA
ST2
FORM PROTECTIVE FILM ON SIDE WALL OF RECESS
ST8
SUPPLY HYDROGEN FLUORIDE TO SUBSTRATE
ST9
END

FIG. 30

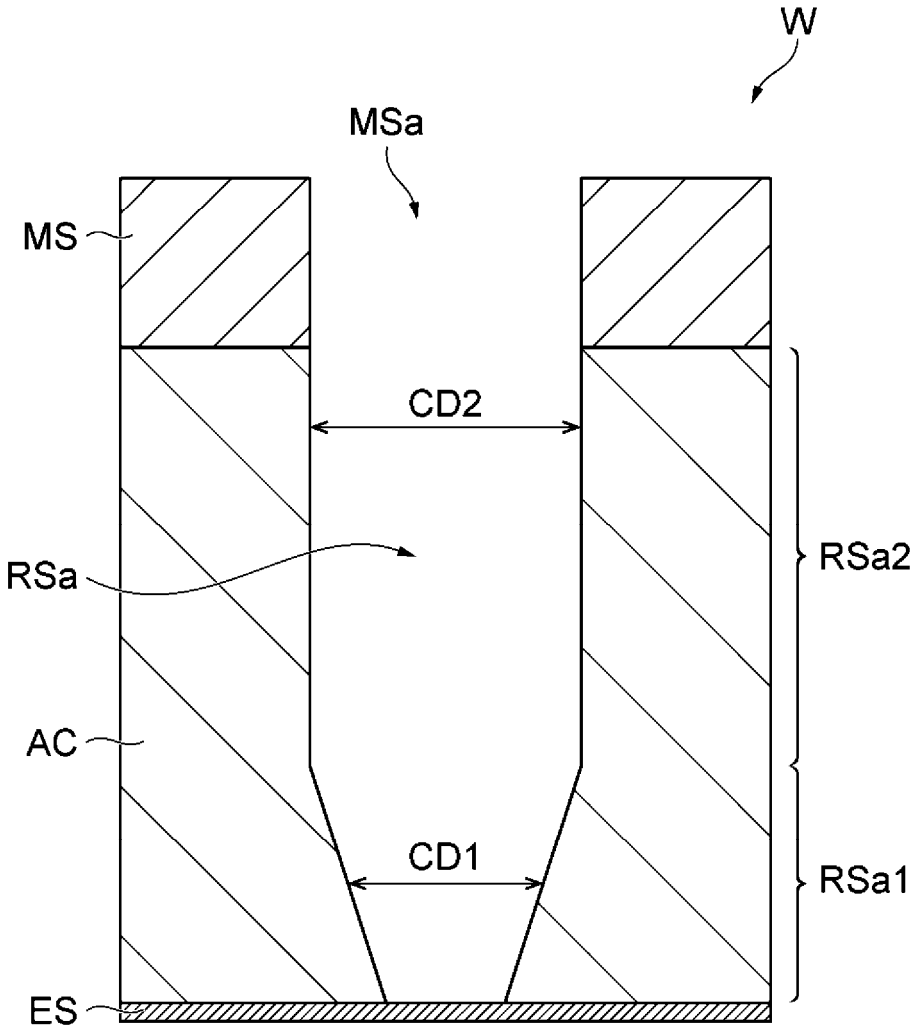

FIG. 31

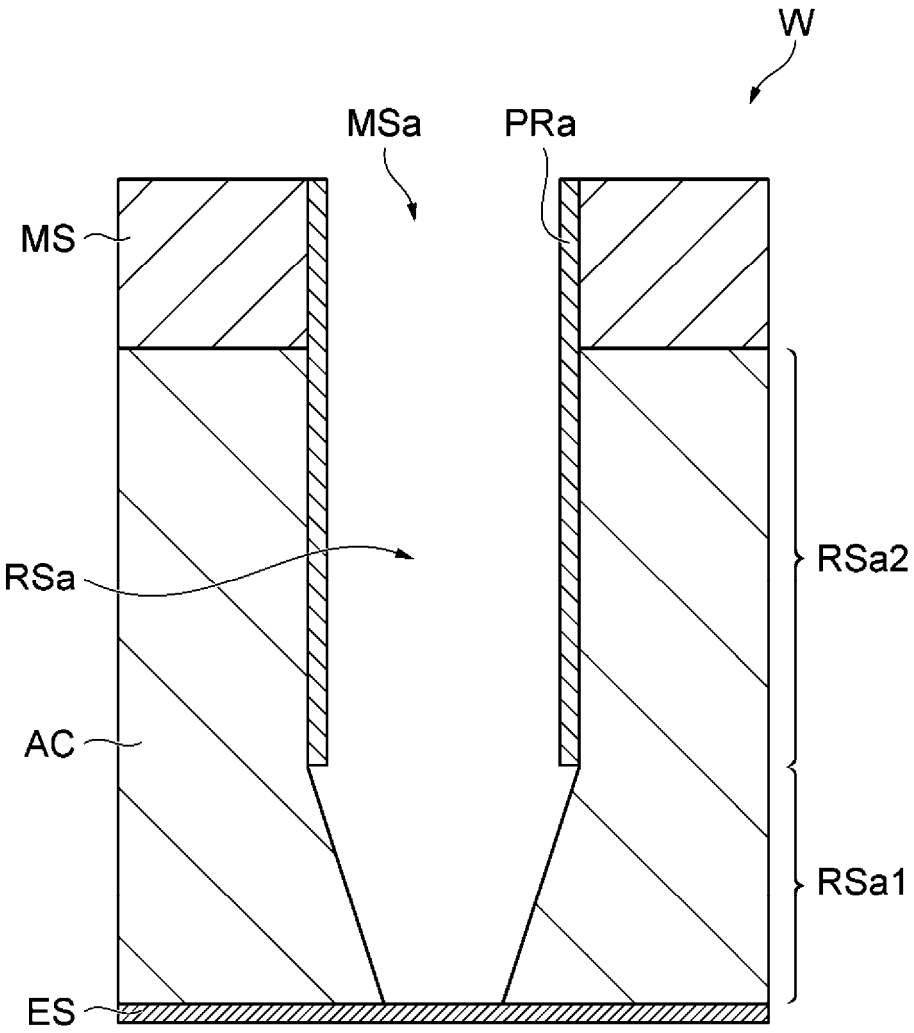

FIG. 32

