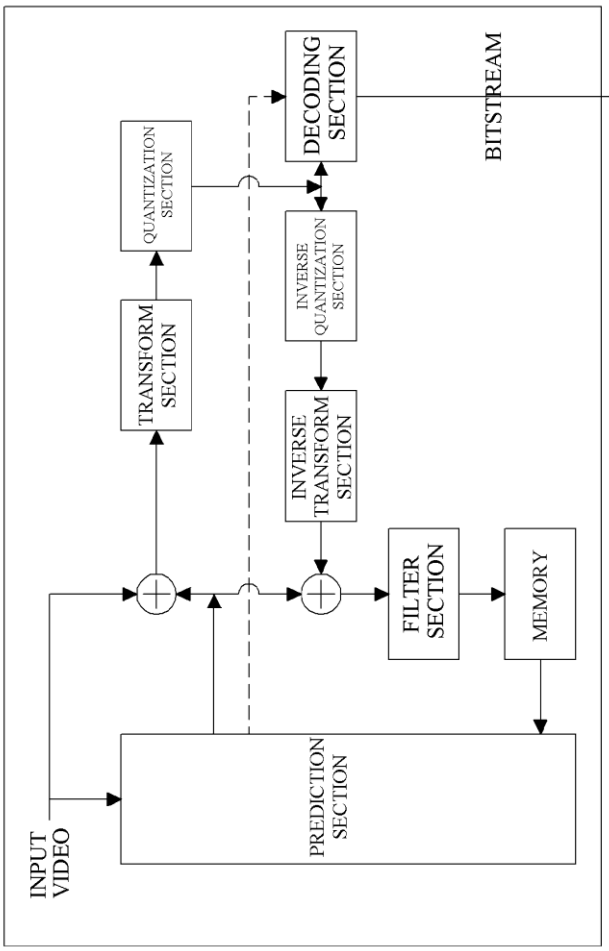
INPUT VIDEO
PREDICTION SECTION
FILTER SECTION
MEMORY
INVERSE TRANSFORM SECTION
INVERSE QUANTIZATION SECTION
TRANSFORM SECTION
QUANTIZATION SECTION
DECODING SECTION
BITSTREAM

FIG. 1

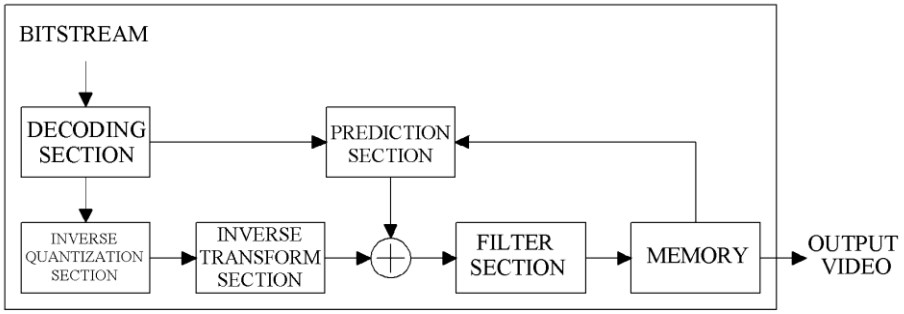
BITSTREAM
DECODING SECTION
PREDICTION SECTION
INVERSE QUANTIZATION SECTION
INVERSE TRANSFORM SECTION
FILTER SECTION
MEMORY
OUTPUT VIDEO

FIG. 2

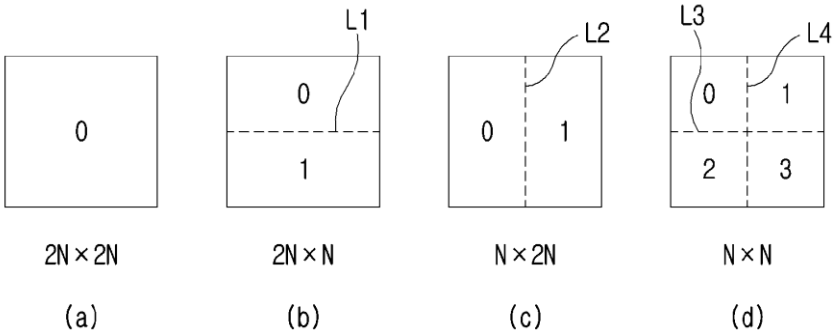
L1
L2
L3
L4
0
1
2
3
2N×2N
2N×N
N×2N
N×N
(a)
(b)
(c)
(d)

FIG. 3

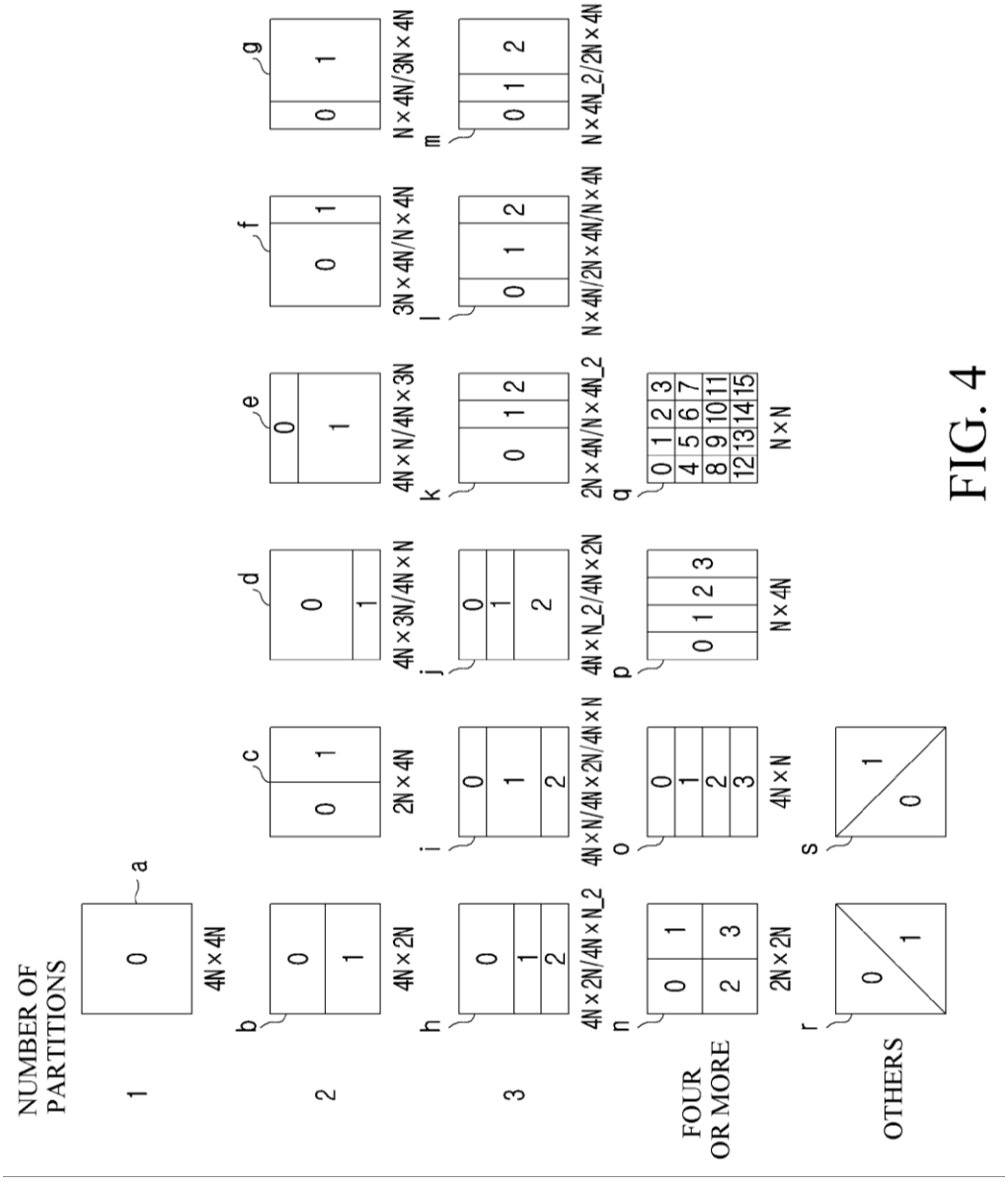
NUMBER OF PARTITIONS
1
2
3
FOUR OR MORE
OTHERS
a
b
c
d
e
f
g
h
i
j
k
l
m
n
o
p
q
r
s
4N×4N
4N×2N
2N×4N
4N×3N/4N×N
4N×N/4N×3N
3N×4N/N×4N
N×4N/3N×4N
4N×2N/4N×N_2
4N×N/4N×2N/4N×N
4N×N_2/4N×2N
2N×4N/N×4N_2
N×4N/2N×4N/N×4N
N×4N_2/2N×4N
2N×2N
4N×N
N×N

FIG. 4

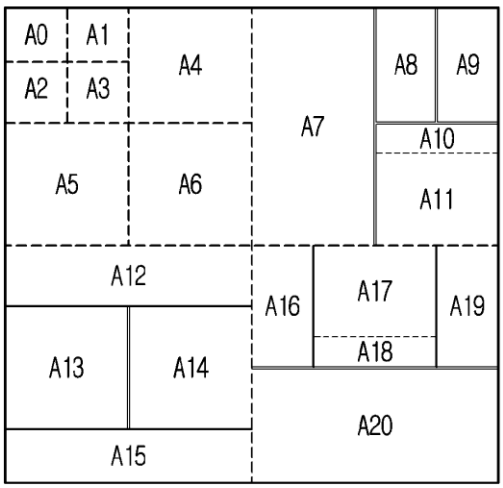

FIG. 5

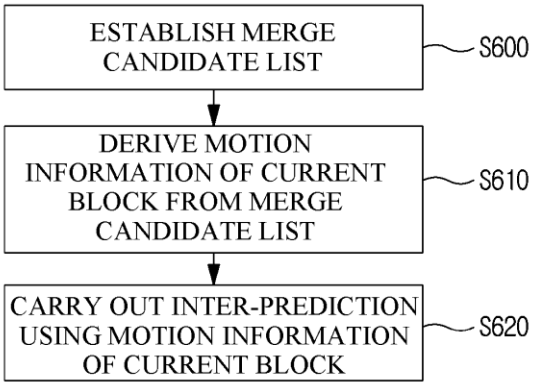

FIG. 6

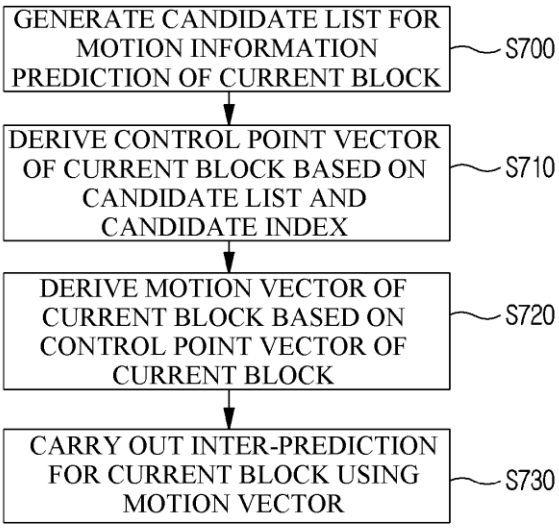

FIG. 7

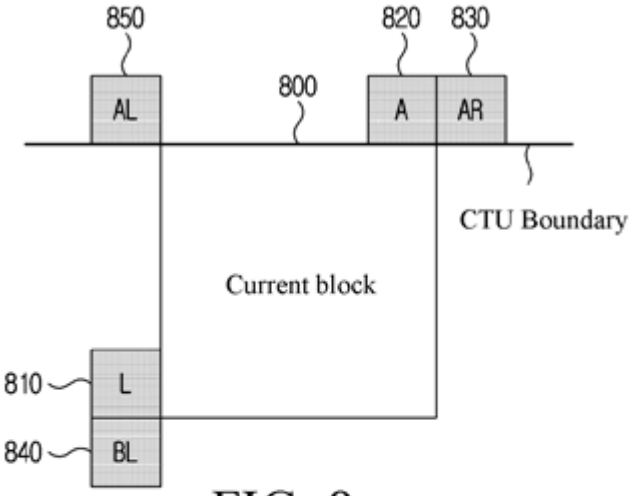
850
820
830
800
AL
A
AR
CTU Boundary
Current block
810
L
840
BL

FIG. 8

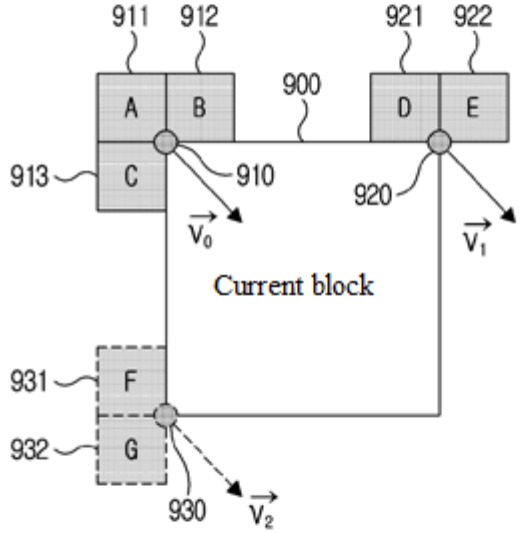
911
912
921
922
900
A
B
D
E
913
C
910
920
$\vec{V}_0$
$\vec{V}_1$
Current block
931
F
932
G
930
$\vec{V}_2$

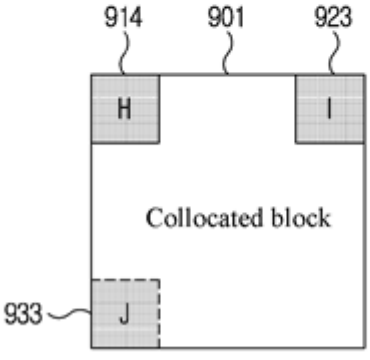
914
901
923
H
I
Collocated block
933
J

FIG. 9

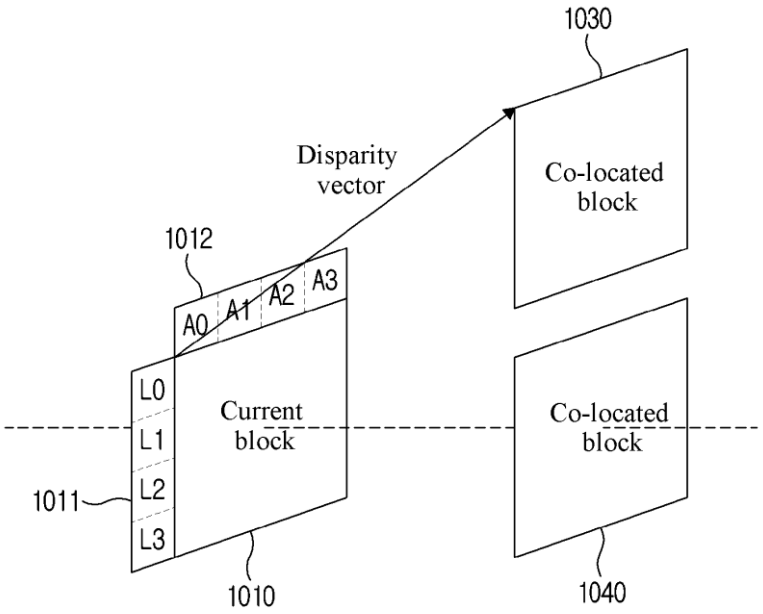
1030
Disparity vector
Co-located block
1012
A0
A1
A2
A3
L0
L1
L2
L3
Current block
Co-located block
1011
1010
1040

FIG. 10

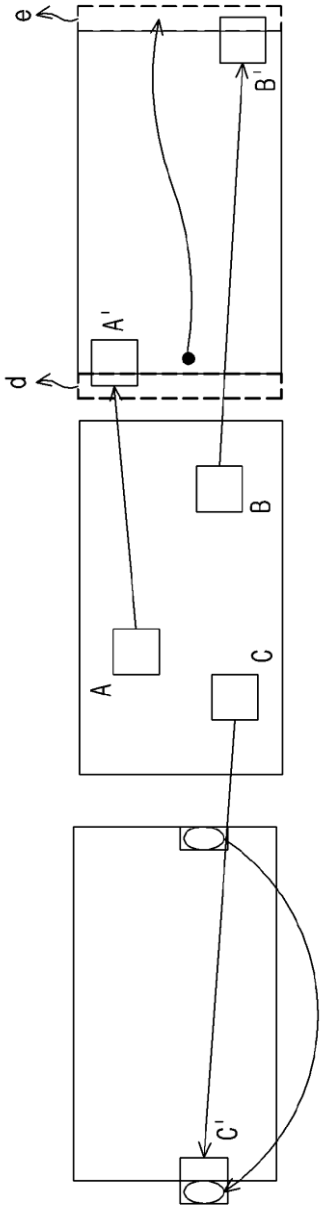

FIG. 11

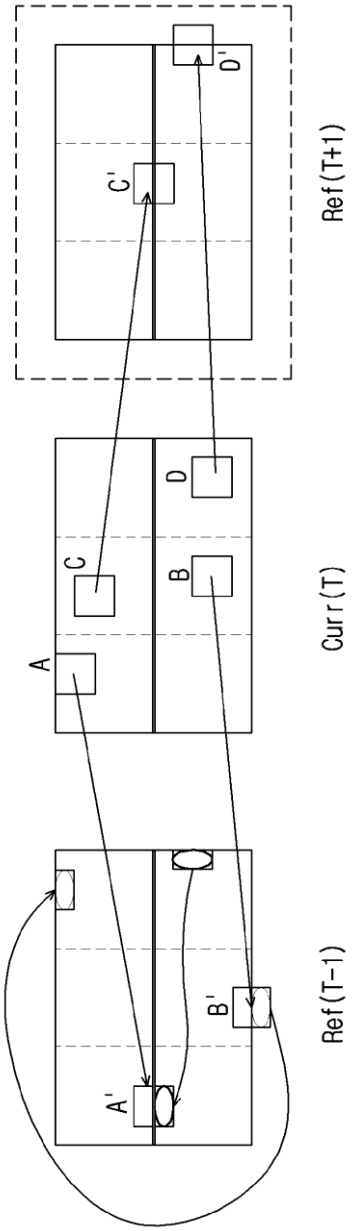

FIG. 12

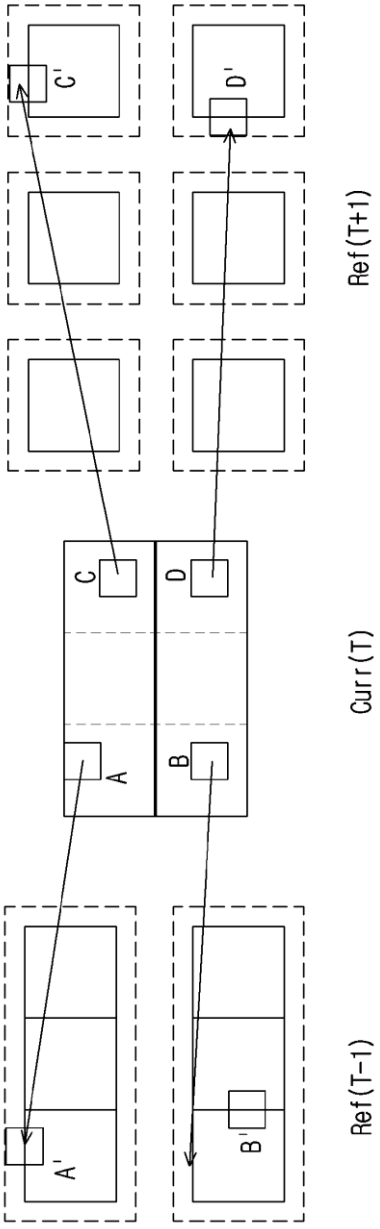

FIG. 13

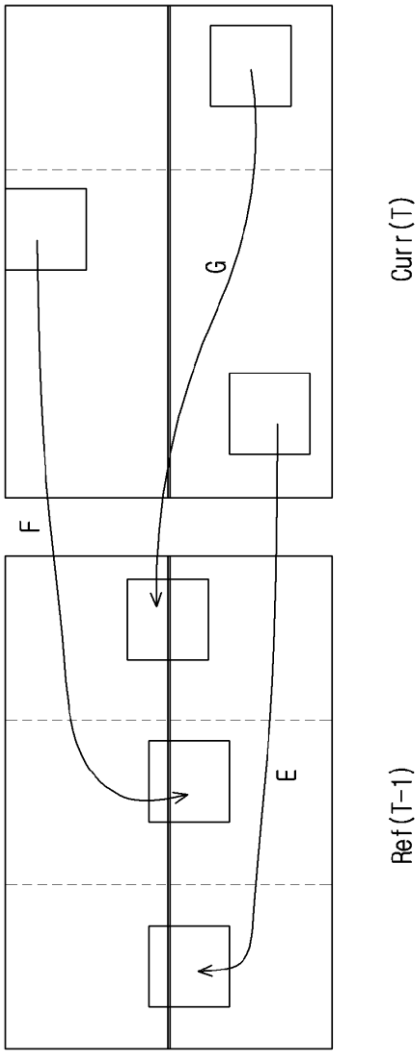

FIG. 14

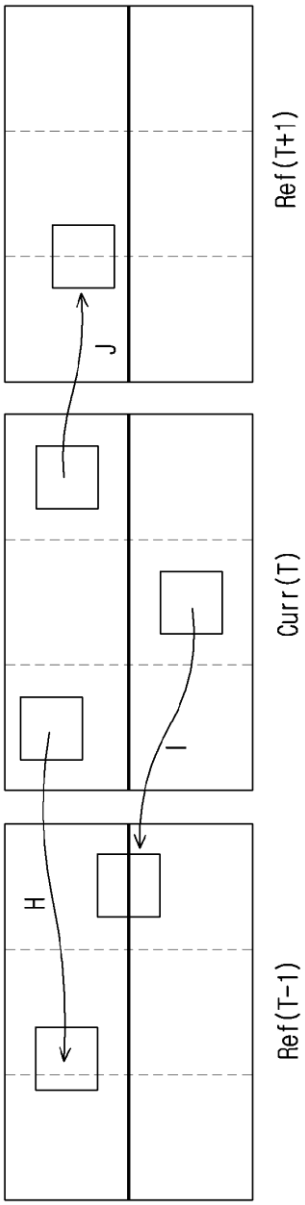

FIG. 15