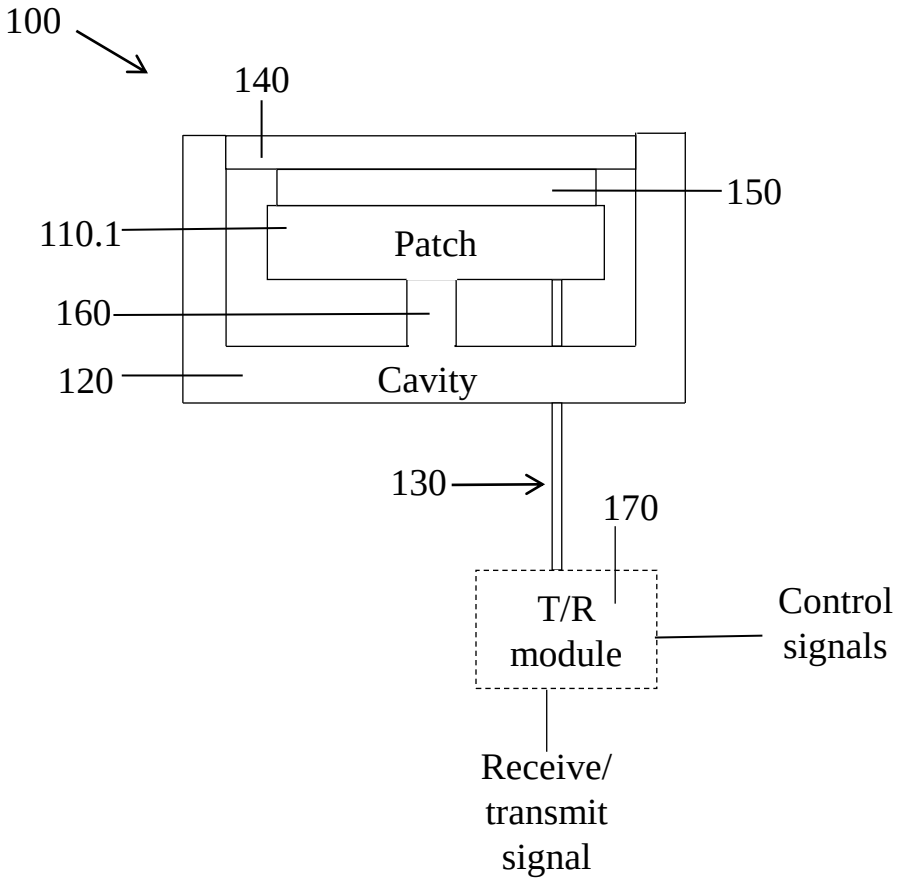
100
140
150
110.1
Patch
160
120
Cavity
130
170
T/R
module
Control
signals
Receive/
transmit
signal

FIG. 1A

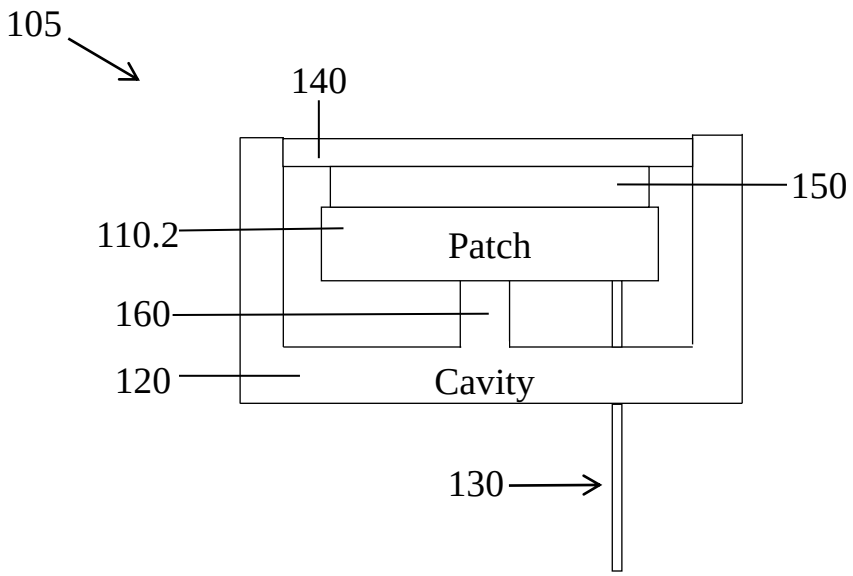
105
140
150
110.2
Patch
160
120
Cavity
130

FIG. 1B

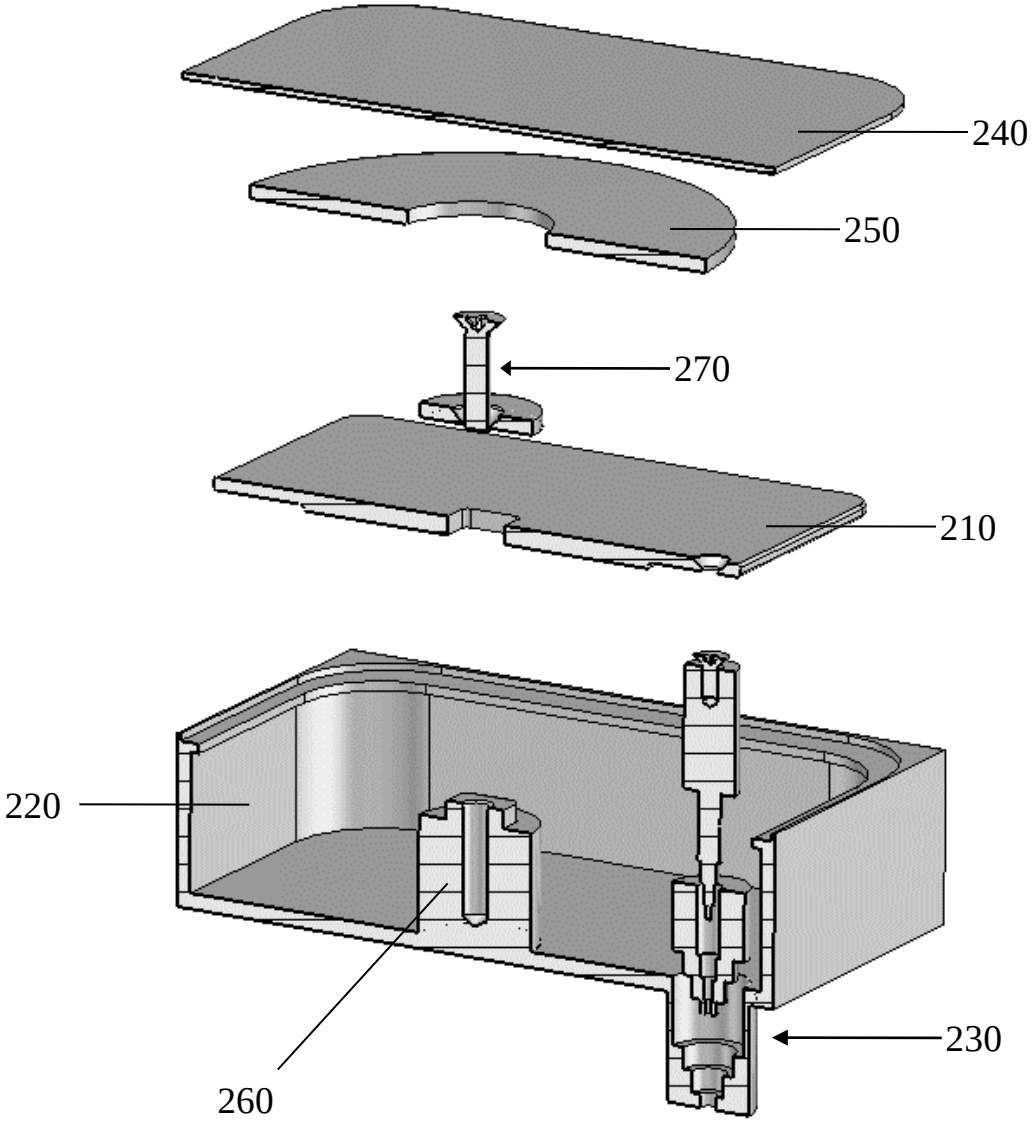

FIG. 2A

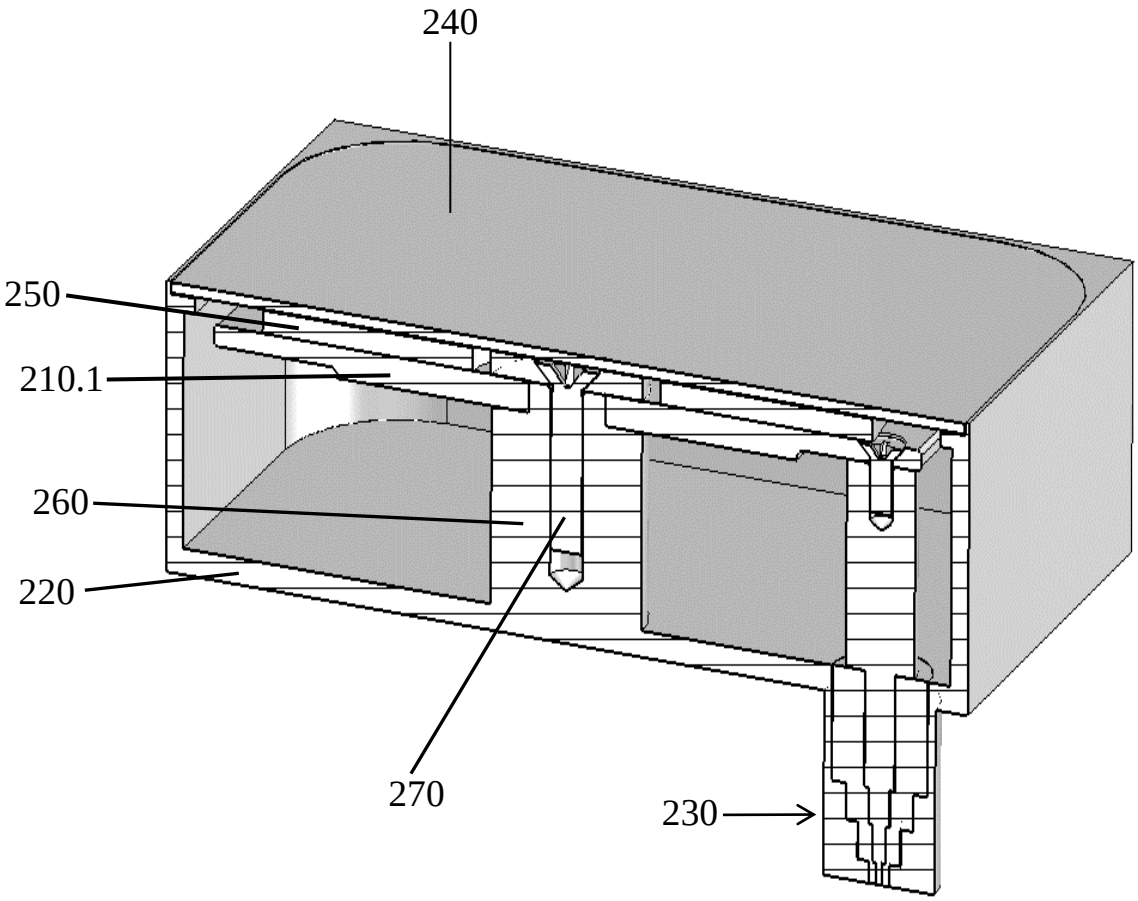

FIG. 2B

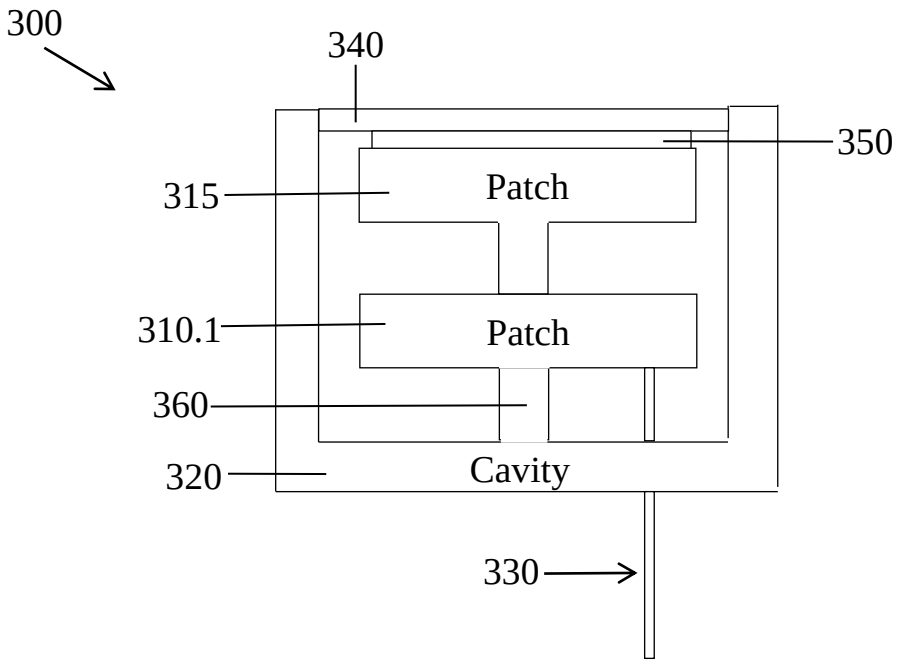
300
340
350
315
Patch
310.1
Patch
360
320
Cavity
330

FIG. 3A

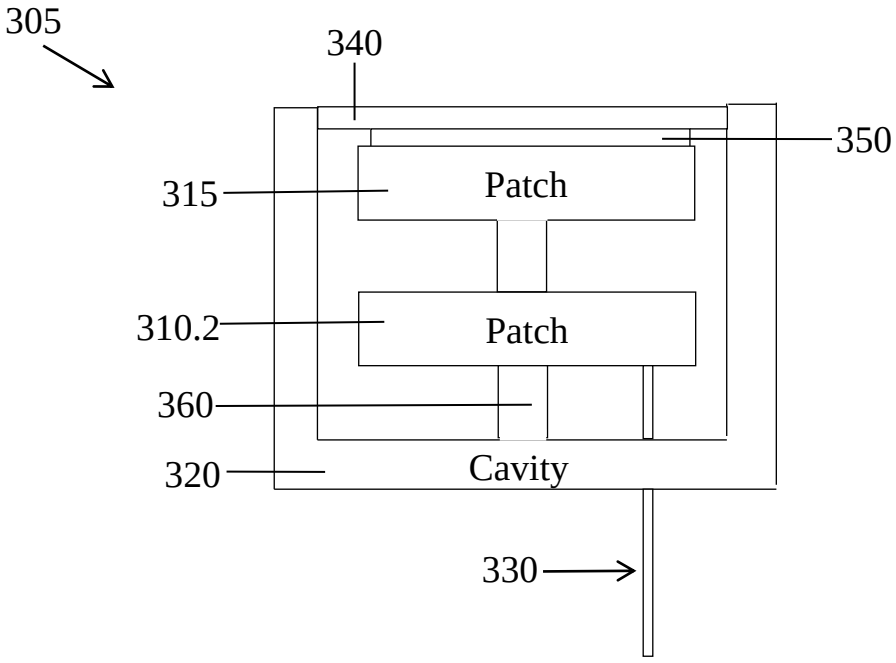
305
340
350
315
Patch
310.2
Patch
360
320
Cavity
330

FIG. 3B

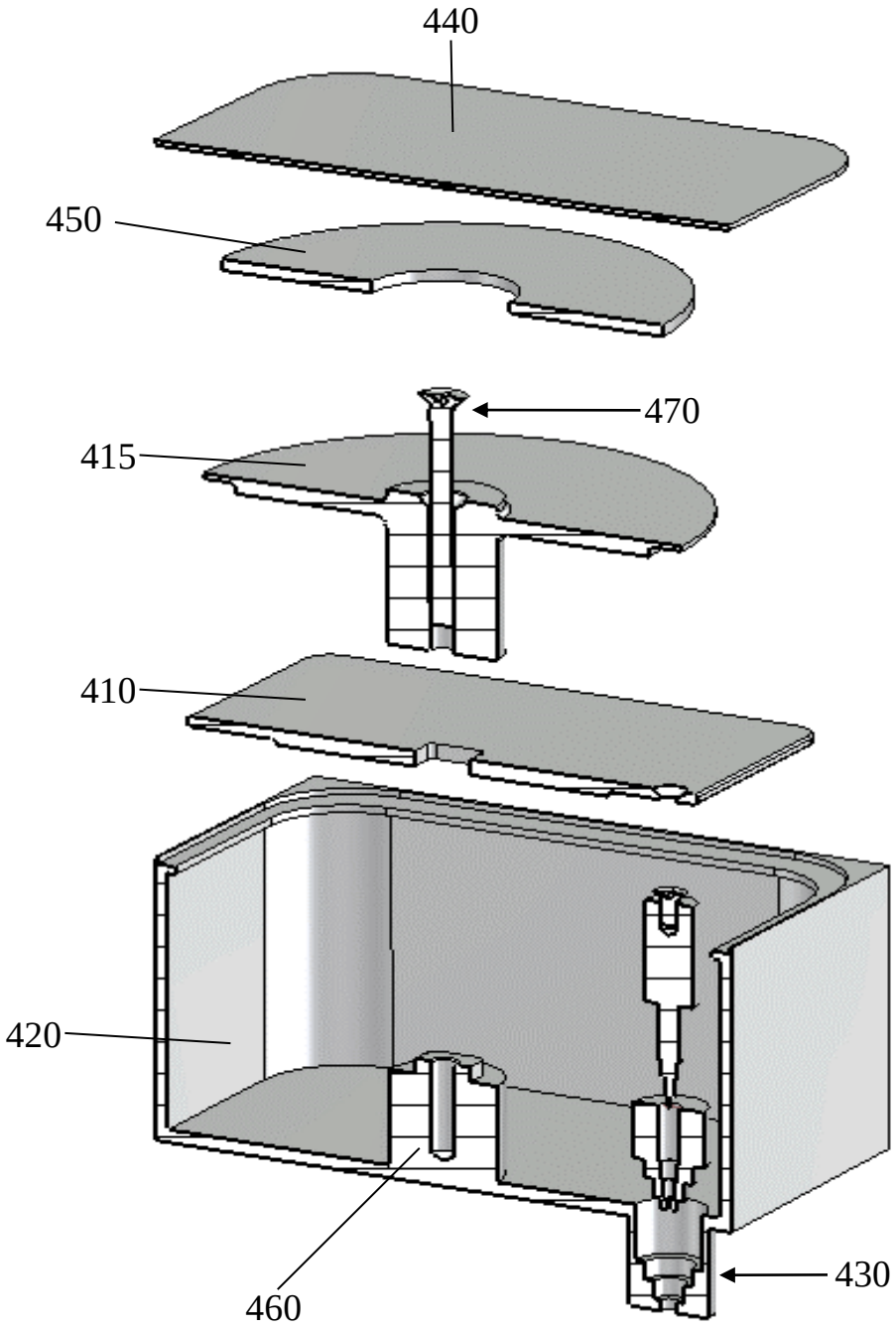

FIG. 4A

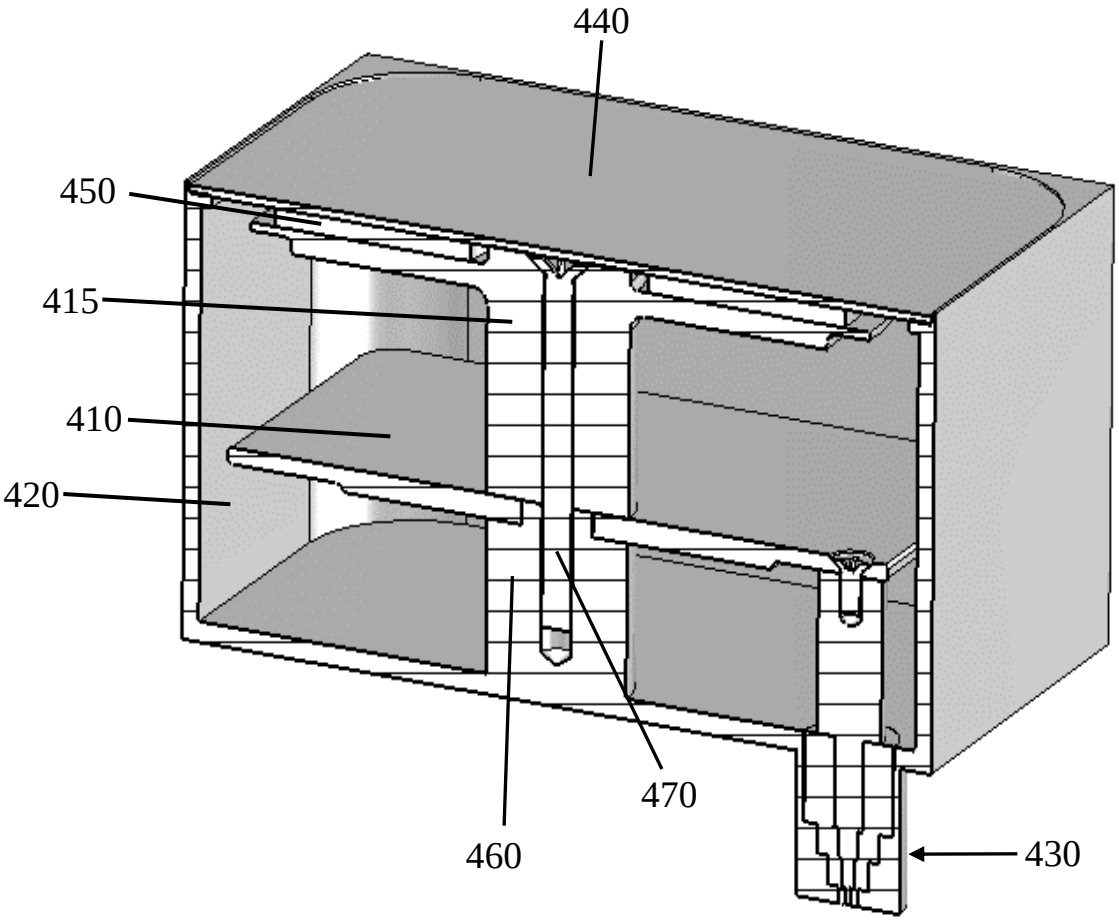

FIG. 4B

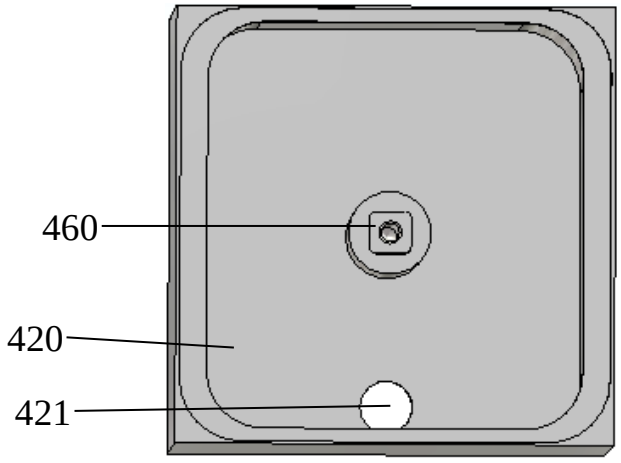

FIG. 4C

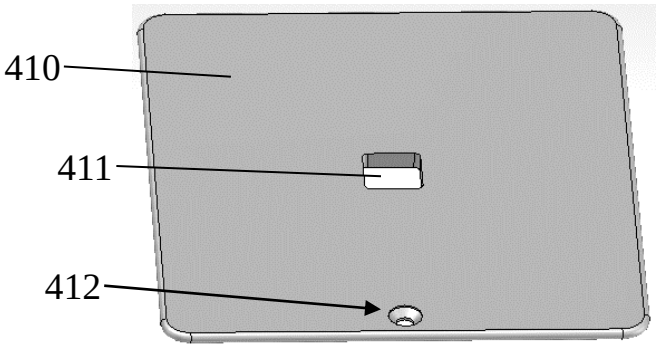

FIG. 4D

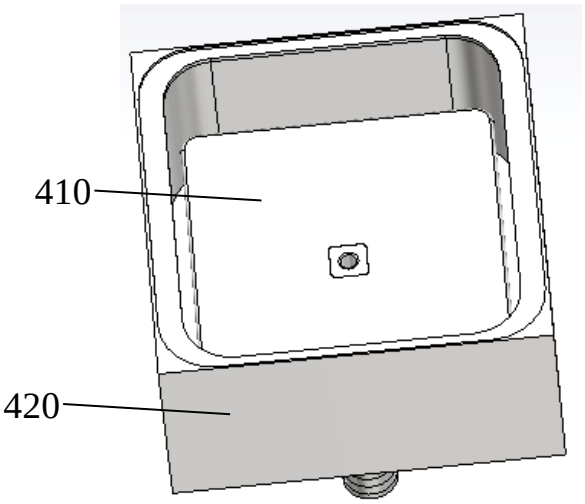

FIG. 4E

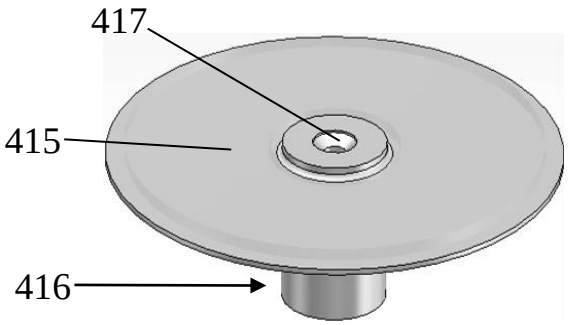

FIG. 4F

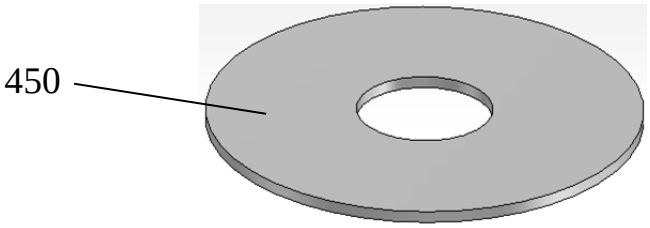

FIG. 4G

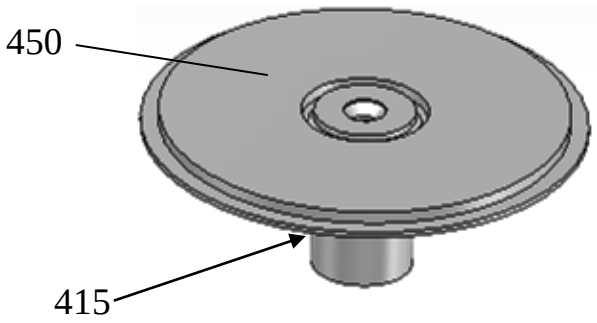

FIG. 4H

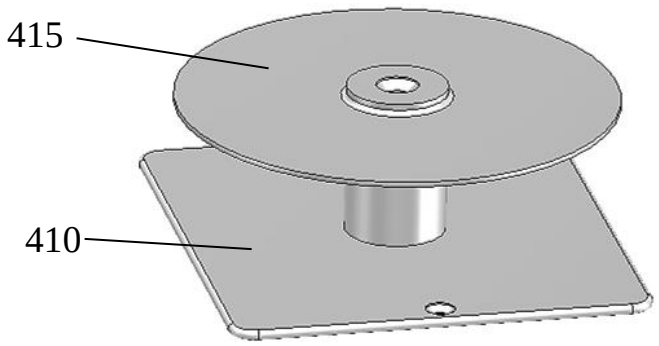

FIG. 4I

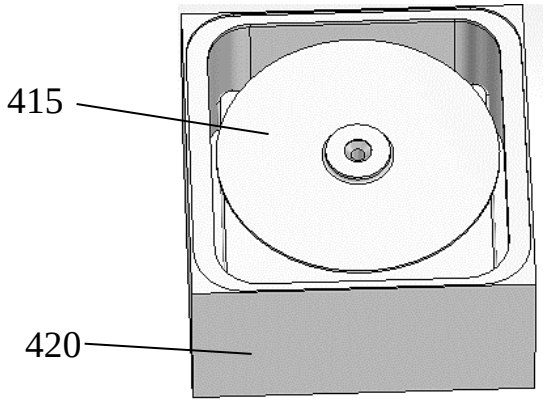

FIG. 4J

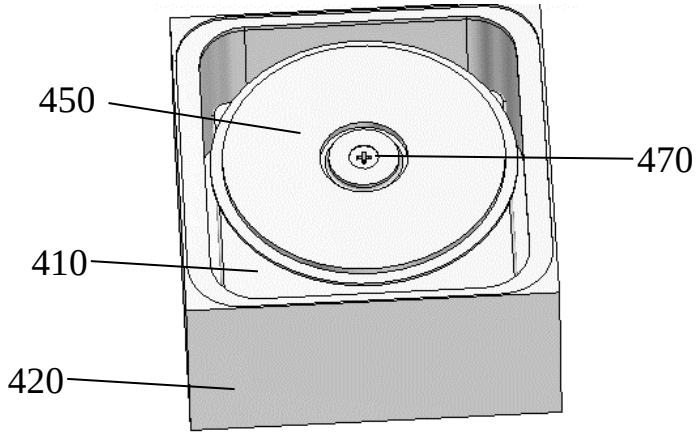

FIG. 4K

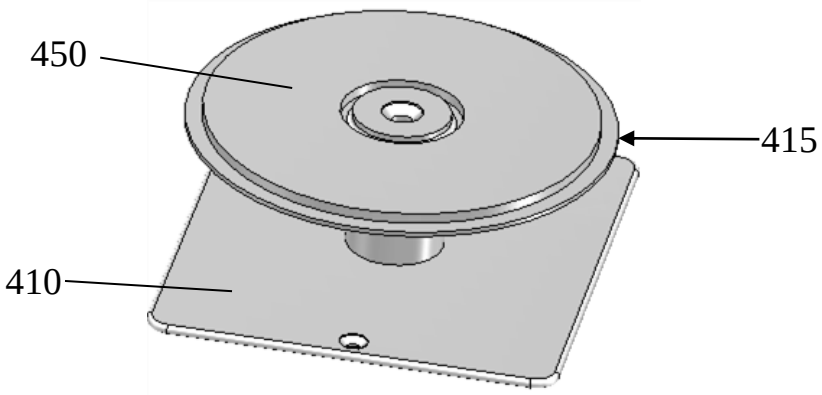

FIG. 4L

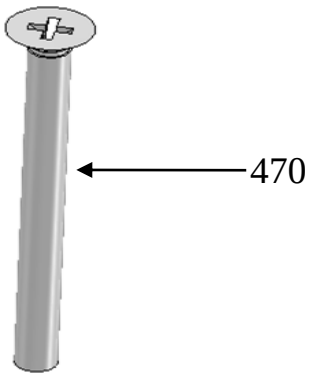

FIG. 4M

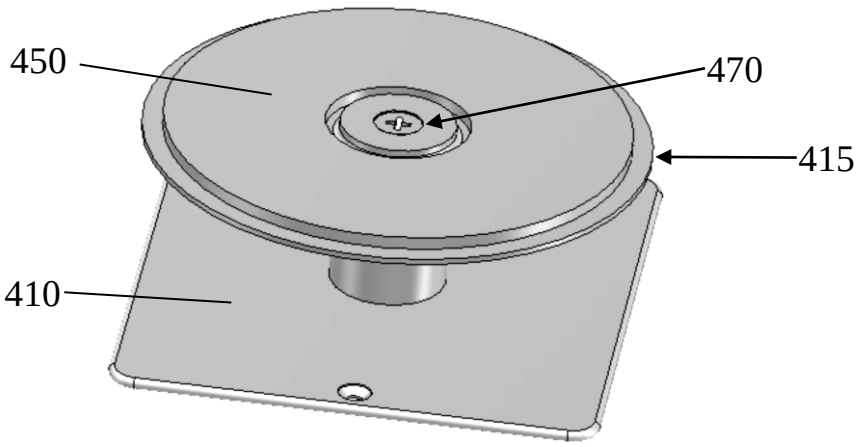

FIG. 4N

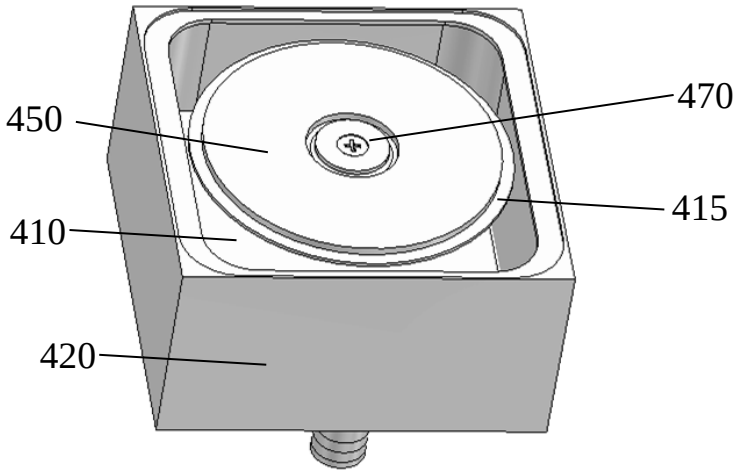

FIG. 4O

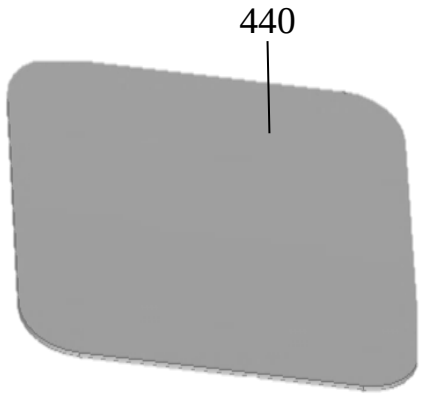

FIG. 4P

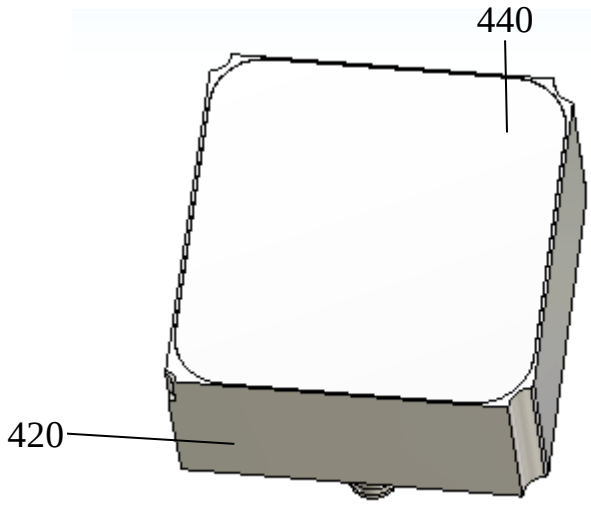

FIG. 4Q

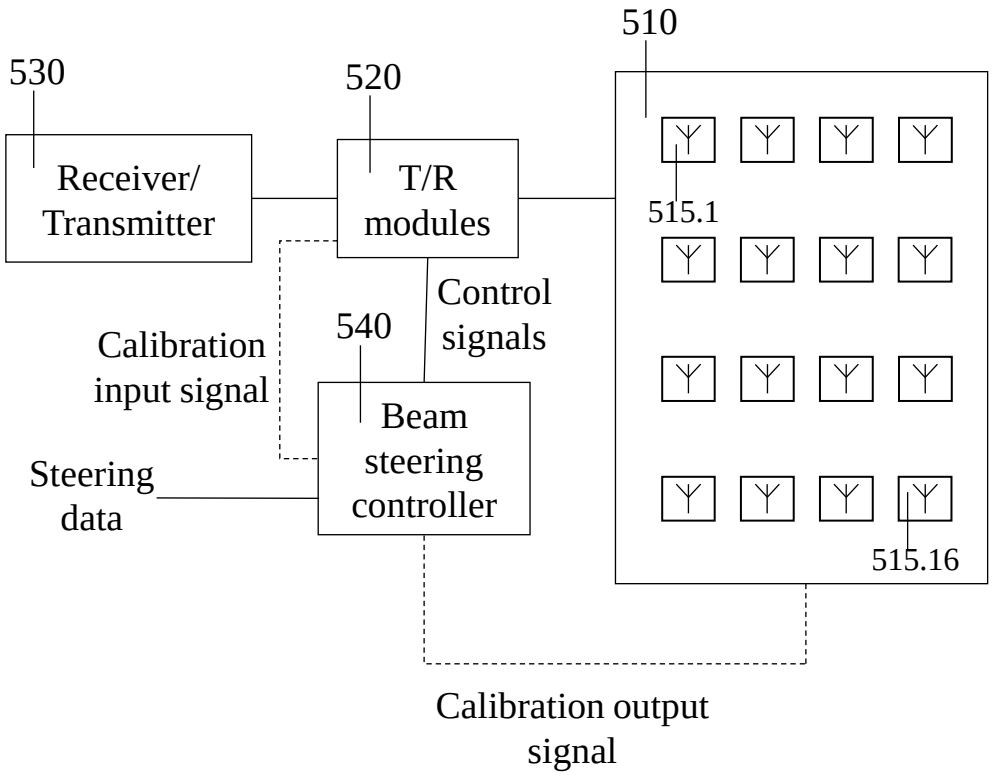
510
530
520
Receiver/
Transmitter
T/R
modules
515.1
Control
signals
Calibration
input signal
540
Beam
steering
controller
Steering
data
515.16
Calibration output
signal

FIG. 5

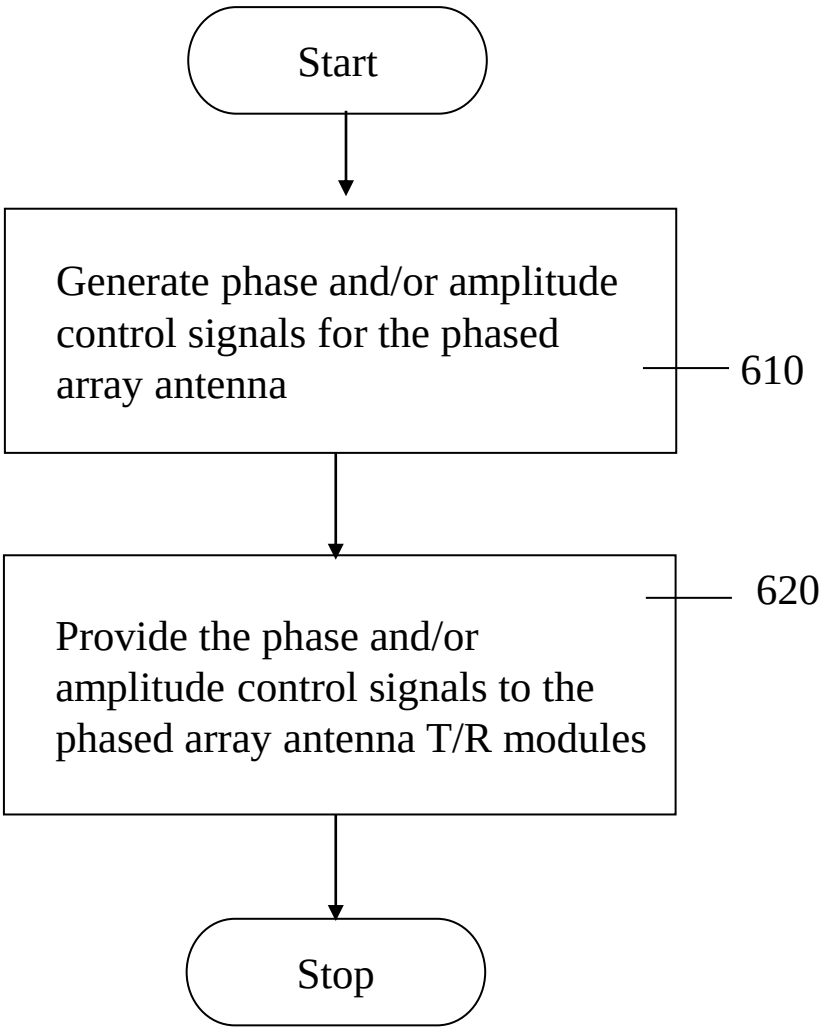
Start
Generate phase and/or amplitude control signals for the phased array antenna
610
Provide the phase and/or amplitude control signals to the phased array antenna T/R modules
620
Stop

FIG. 6