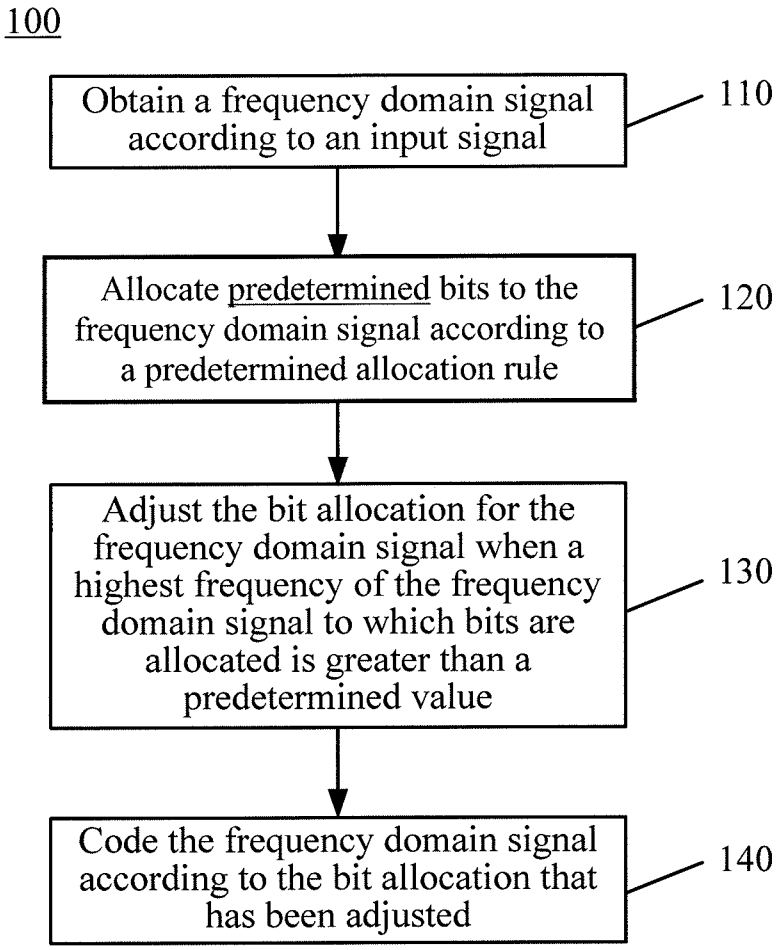
100
Obtain a frequency domain signal according to an input signal
110
Allocate predetermined bits to the frequency domain signal according to a predetermined allocation rule
120
Adjust the bit allocation for the frequency domain signal when a highest frequency of the frequency domain signal to which bits are allocated is greater than a predetermined value
130
Code the frequency domain signal according to the bit allocation that has been adjusted
140

FIG. 1

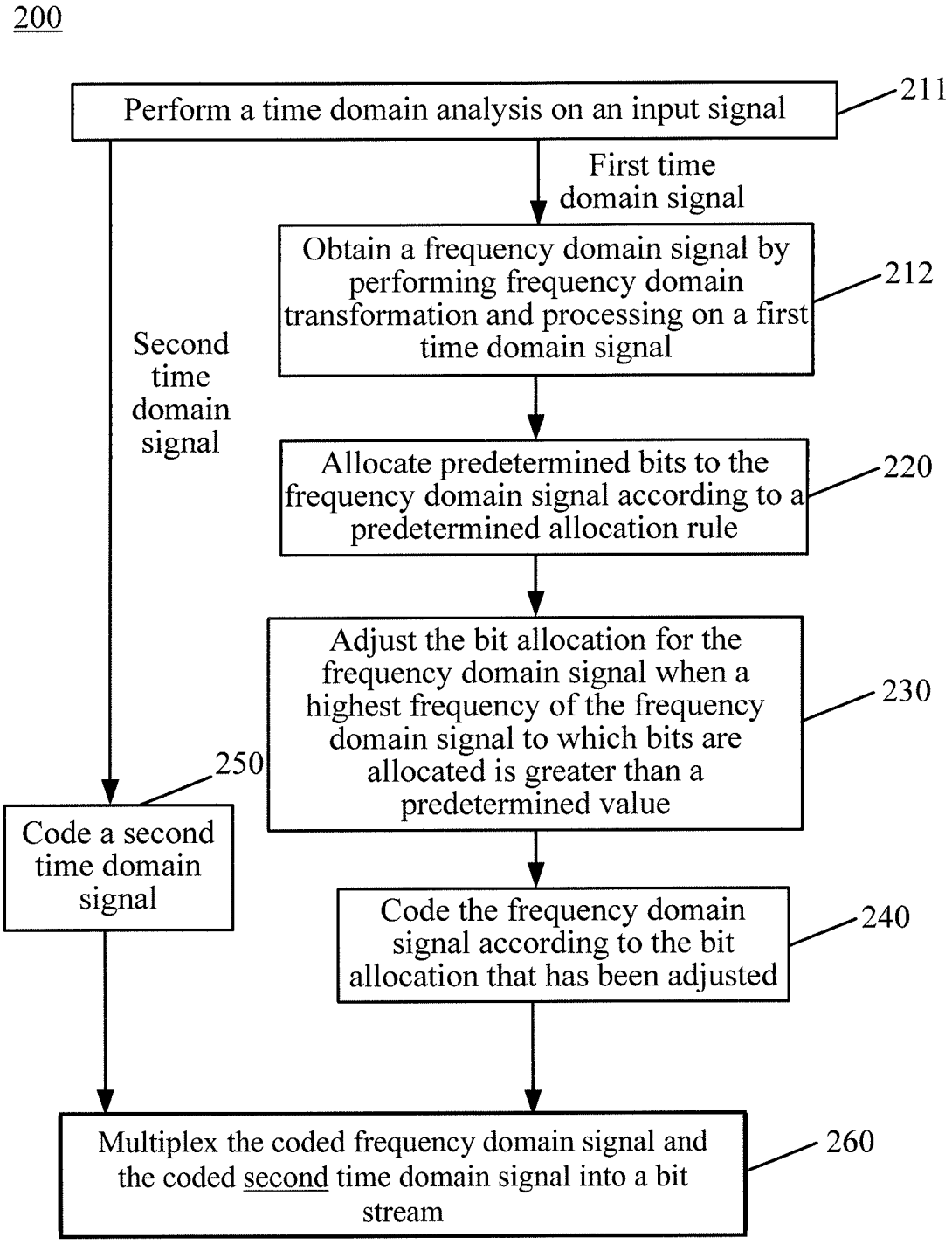
200
Perform a time domain analysis on an input signal
211
First time domain signal
Obtain a frequency domain signal by performing frequency domain transformation and processing on a first time domain signal
212
Second time domain signal
Allocate predetermined bits to the frequency domain signal according to a predetermined allocation rule
220
Adjust the bit allocation for the frequency domain signal when a highest frequency of the frequency domain signal to which bits are allocated is greater than a predetermined value
230
250
Code a second time domain signal
Code the frequency domain signal according to the bit allocation that has been adjusted
240
Multiplex the coded frequency domain signal and the coded second time domain signal into a bit stream
260

FIG. 2

Device 600

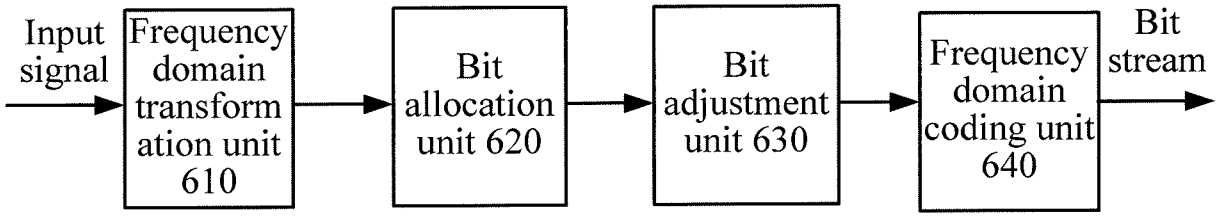

FIG. 6

Device 700

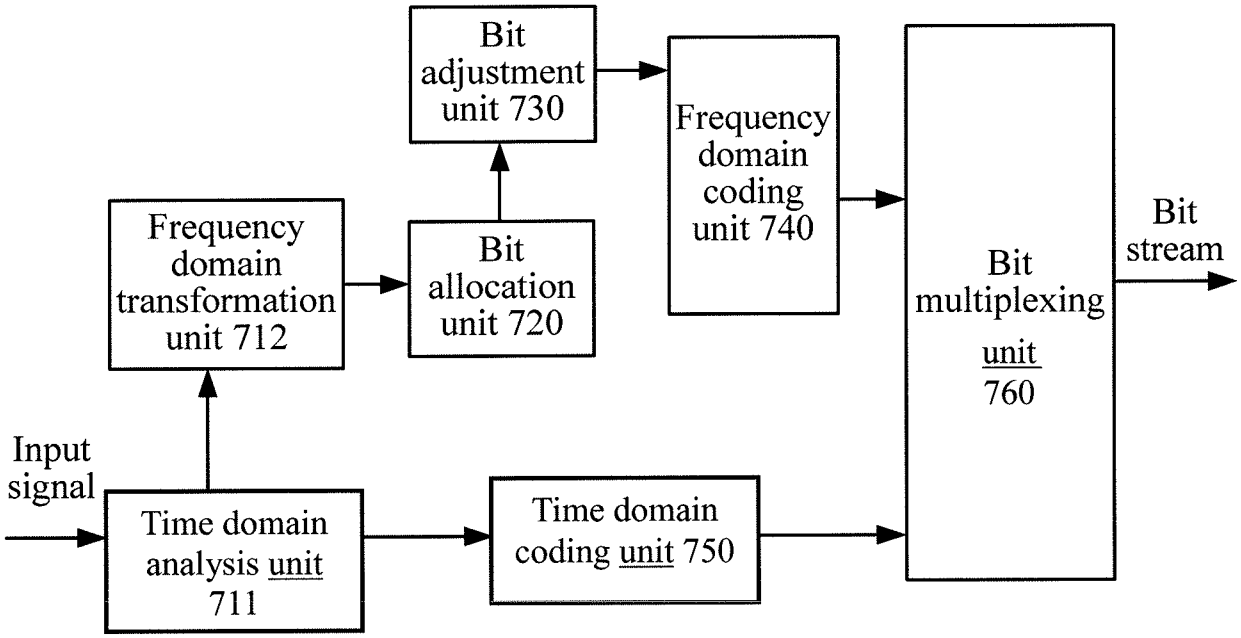

FIG. 7

Device 800

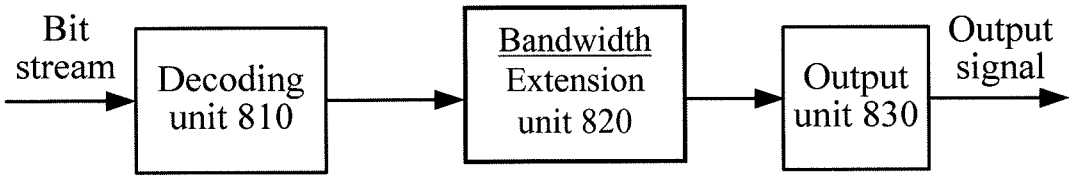

FIG. 8