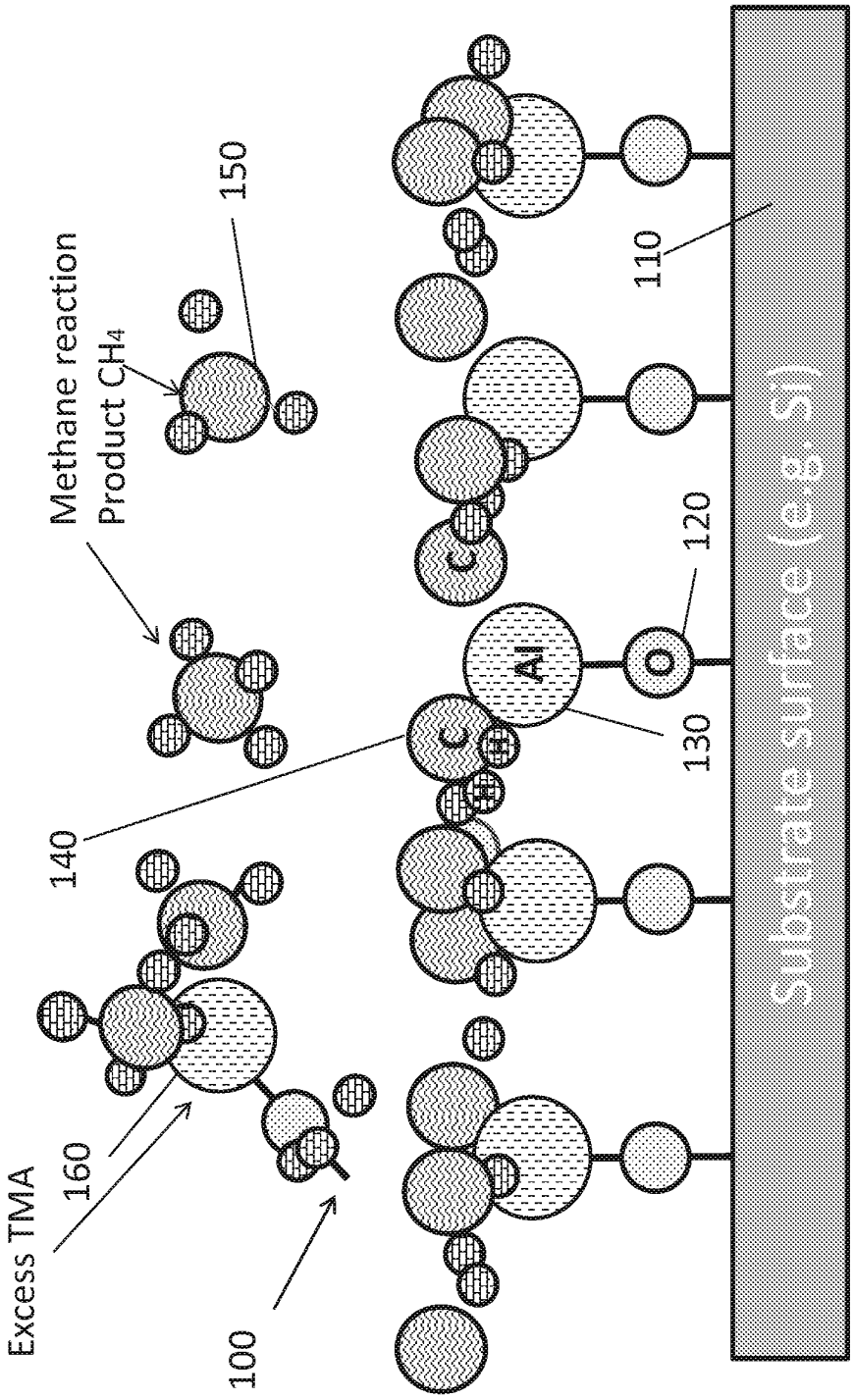

FIGURE 1
TMA reaction with surface hydroxyl groups on Si surface

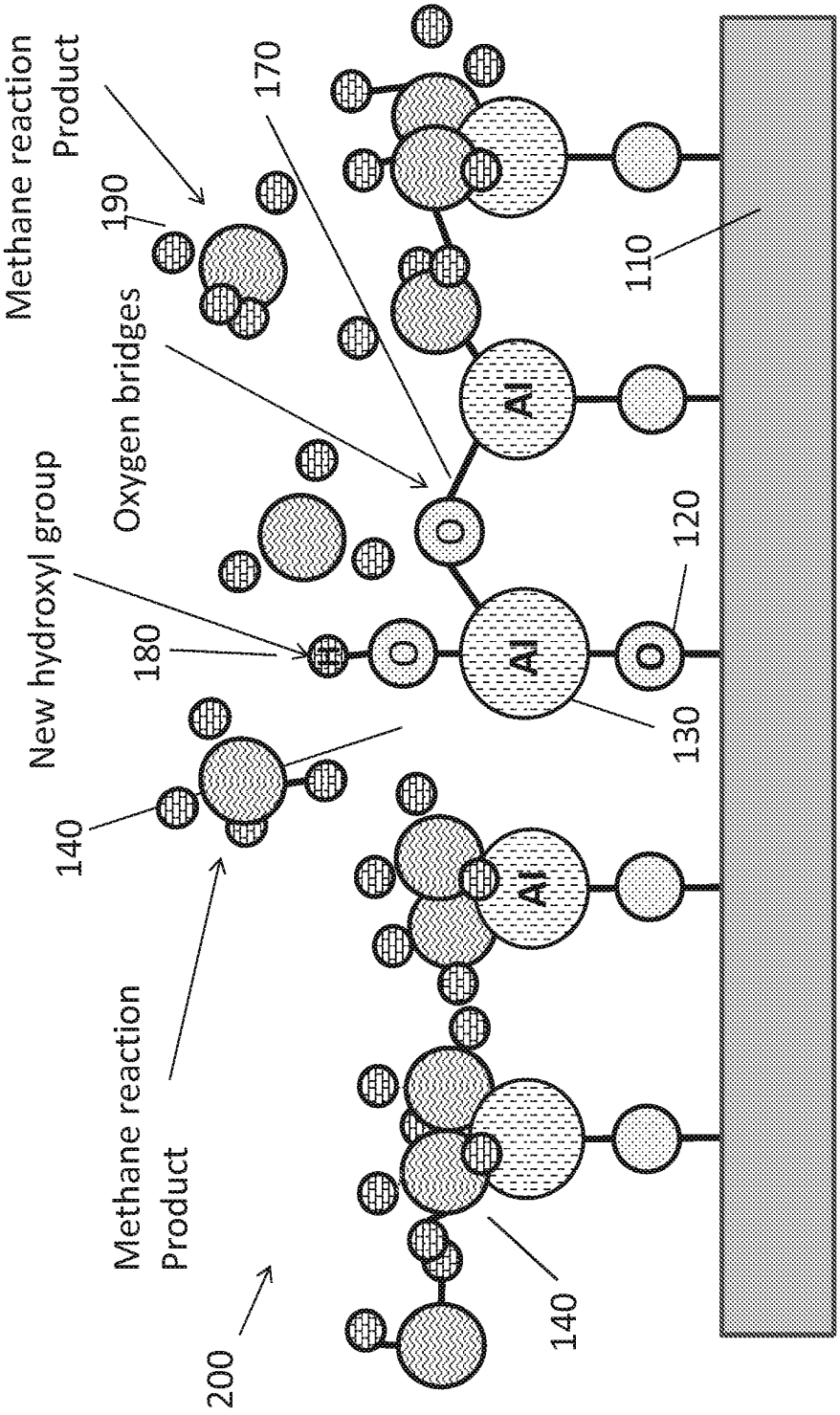
Methane reaction Product
190
170
Oxygen bridges
New hydroxyl group
180
140
Methane reaction Product
200
Al
O
110
120
130
140

FIGURE 2

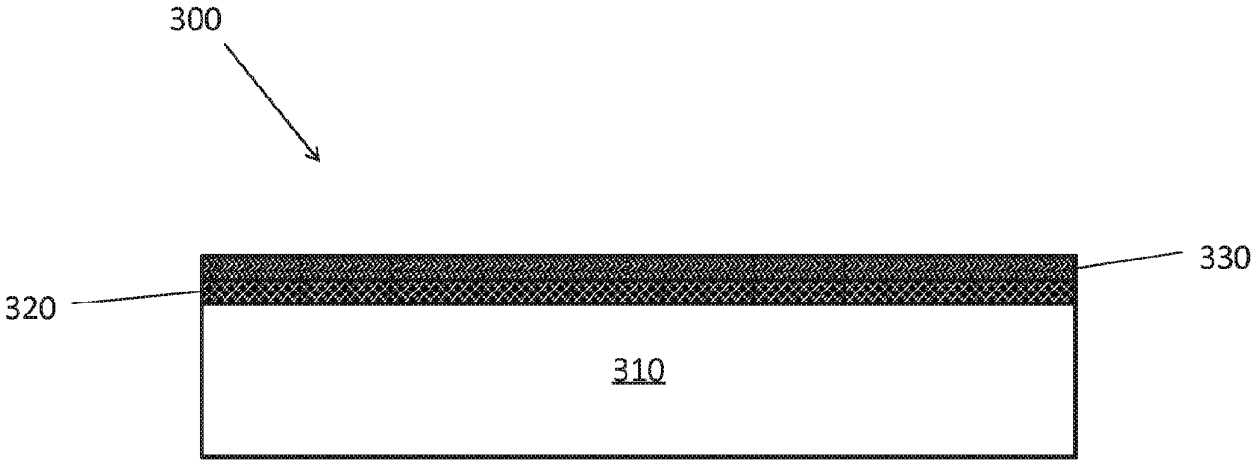

FIGURE 3

FIGURE 4A
PRIR ART

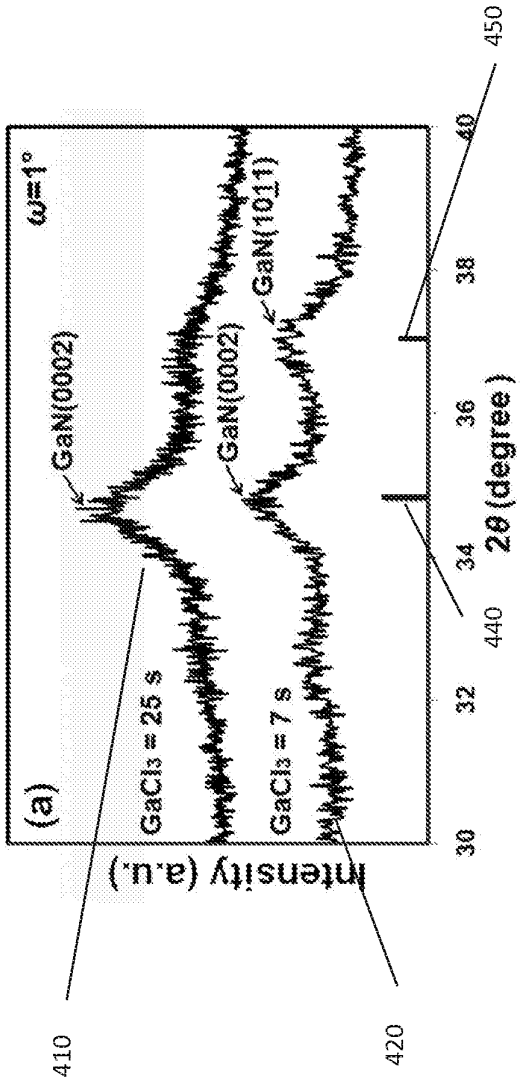

FIGURE 4B
PRIR ART

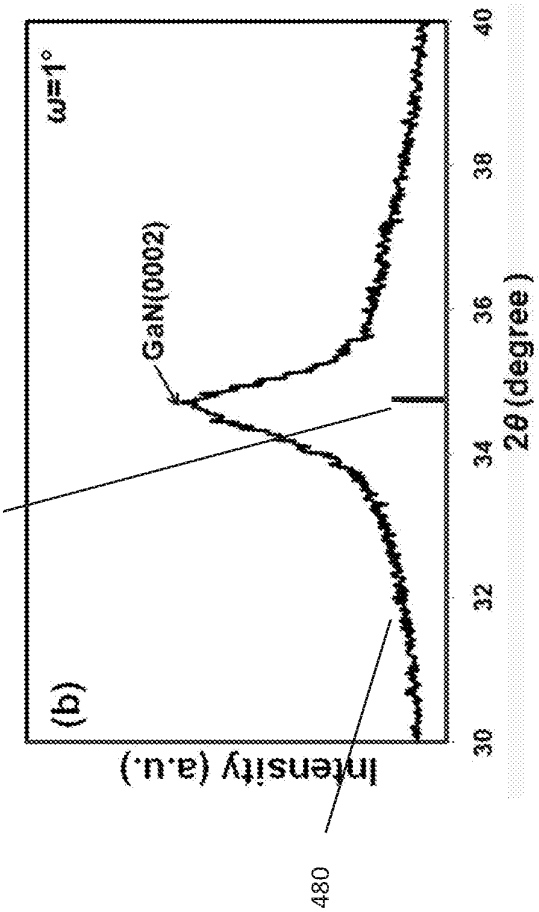

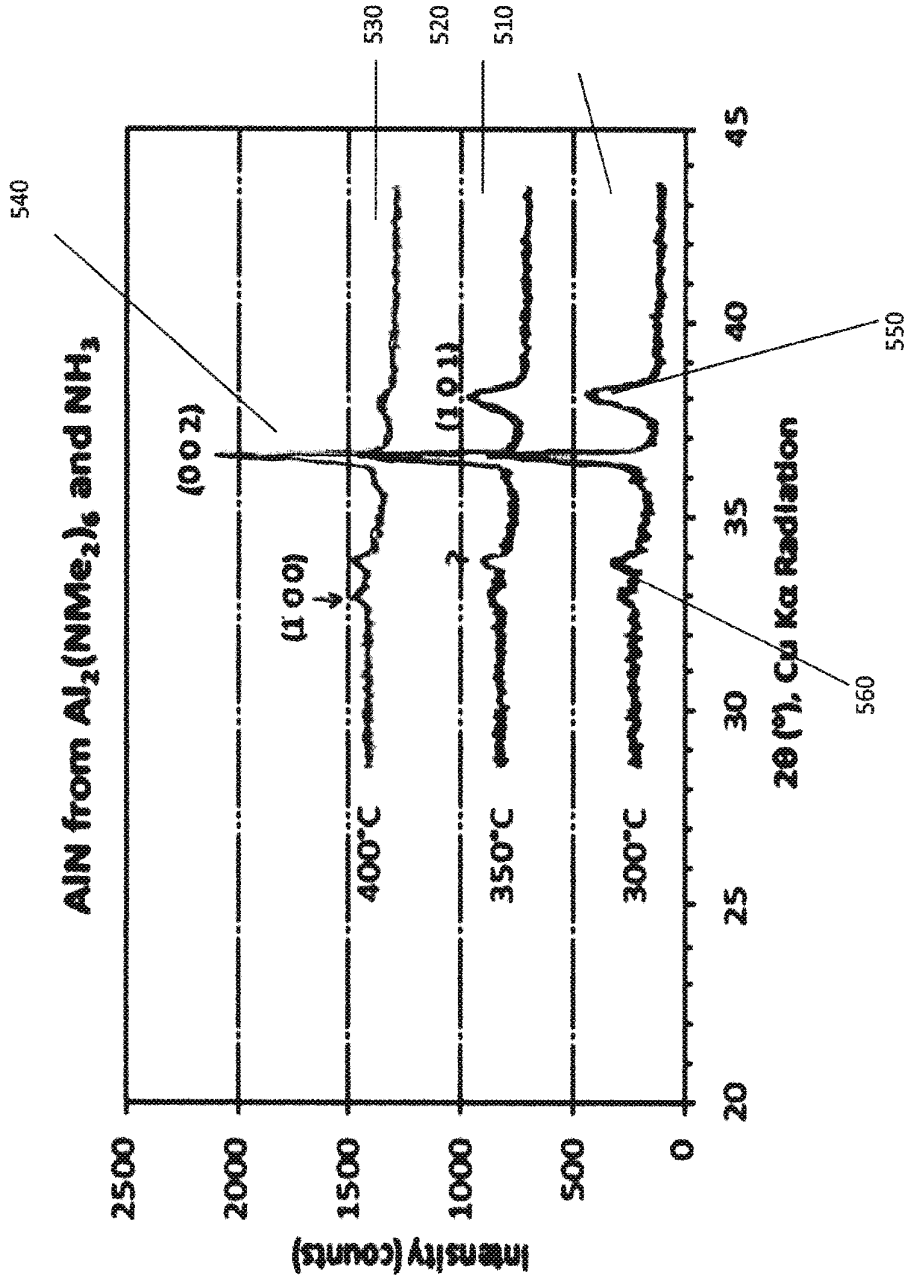

FIGURE 5
PRIOR ART

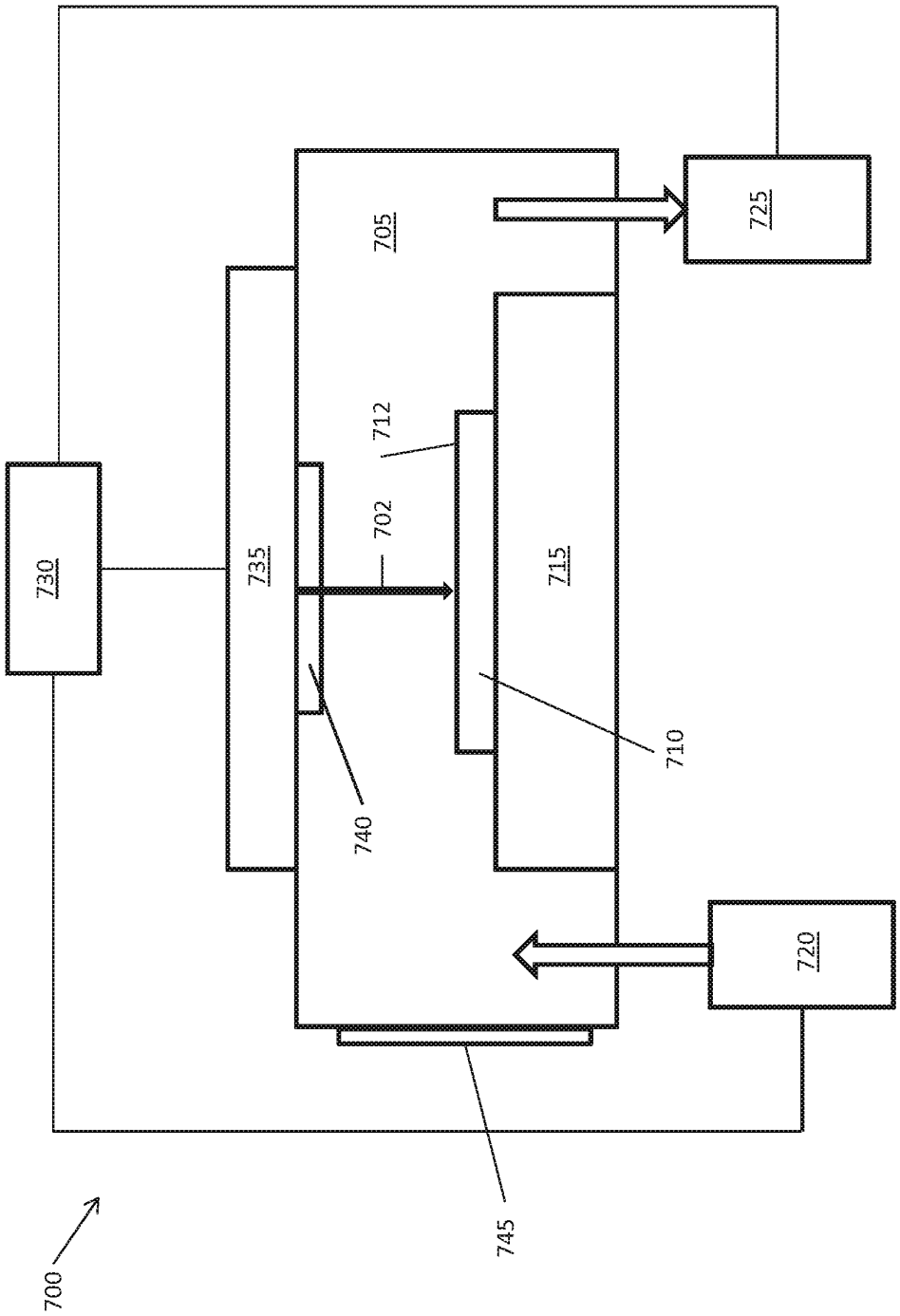

FIGURE 6

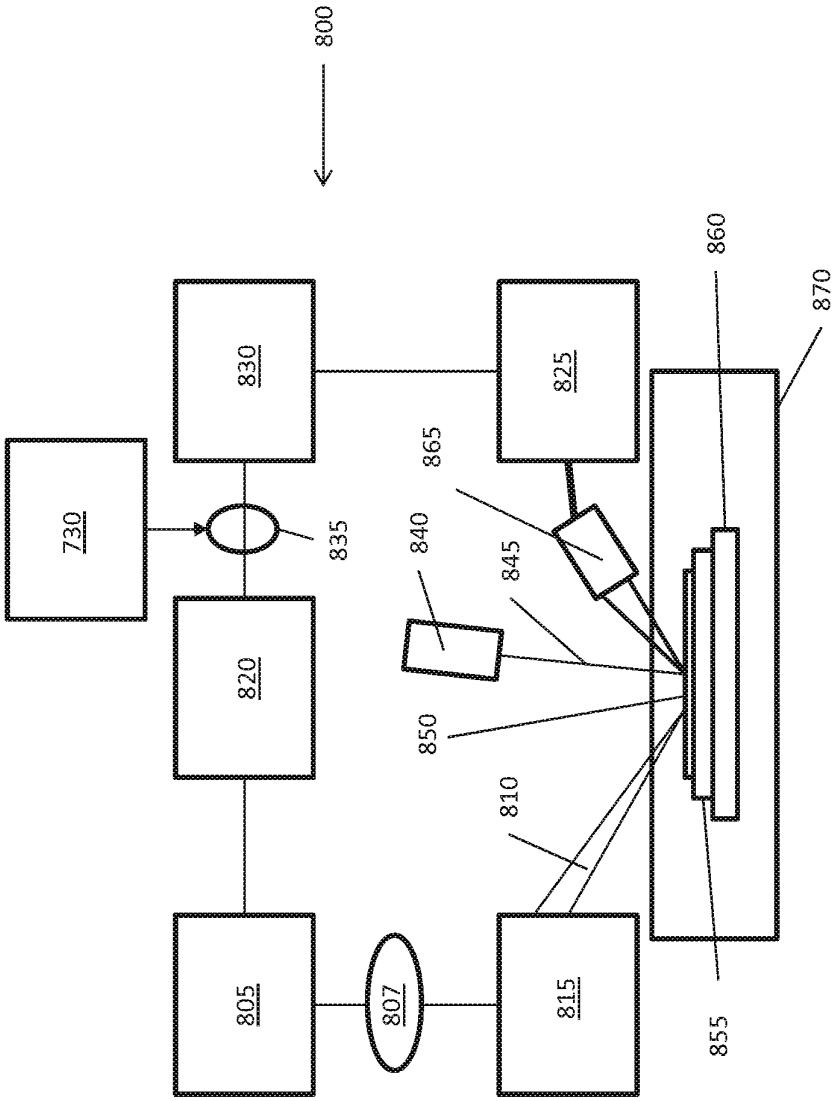
800
730
830
825
820
805
807
815
835
840
845
850
855
860
865
870
810

FIGURE 7

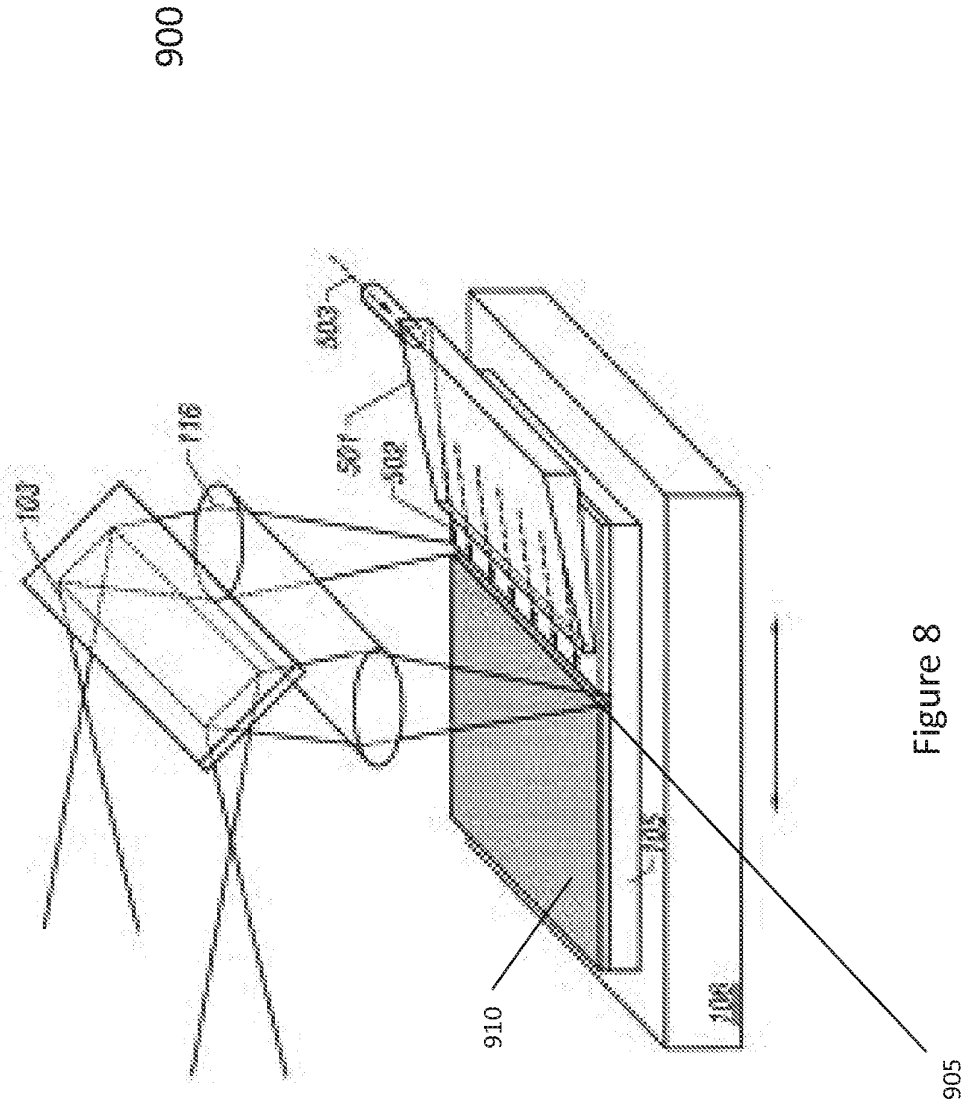

Figure 8

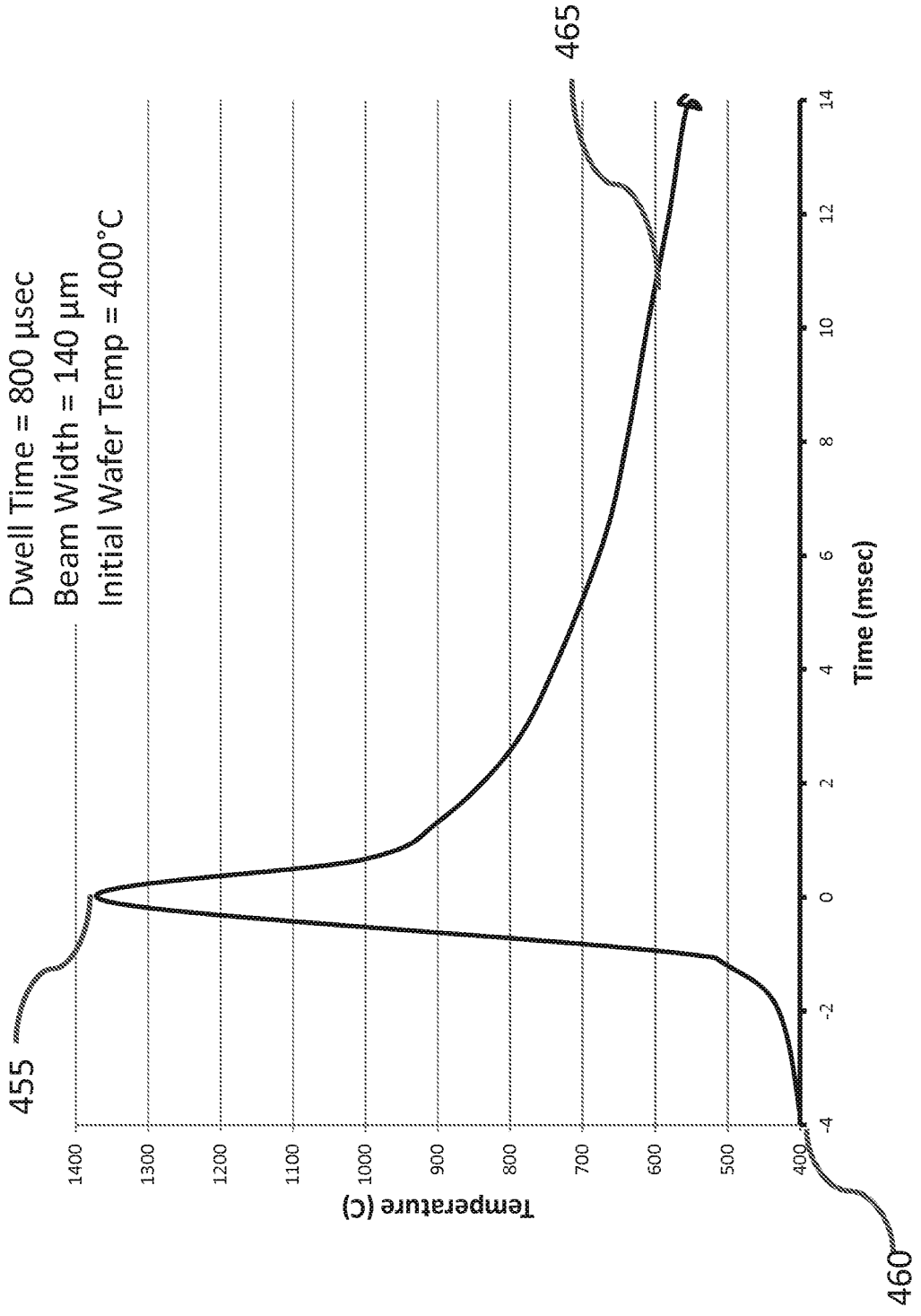
Dwell Time = 800 µsec
Beam Width = 140 µm
Initial Wafer Temp = 400°C
455
465
460
Temperature (C)
1400
1300
1200
1100
1000
900
800
700
600
500
400
-4
-2
0
2
4
6
8
10
12
14
Time (msec)

FIGURE 9

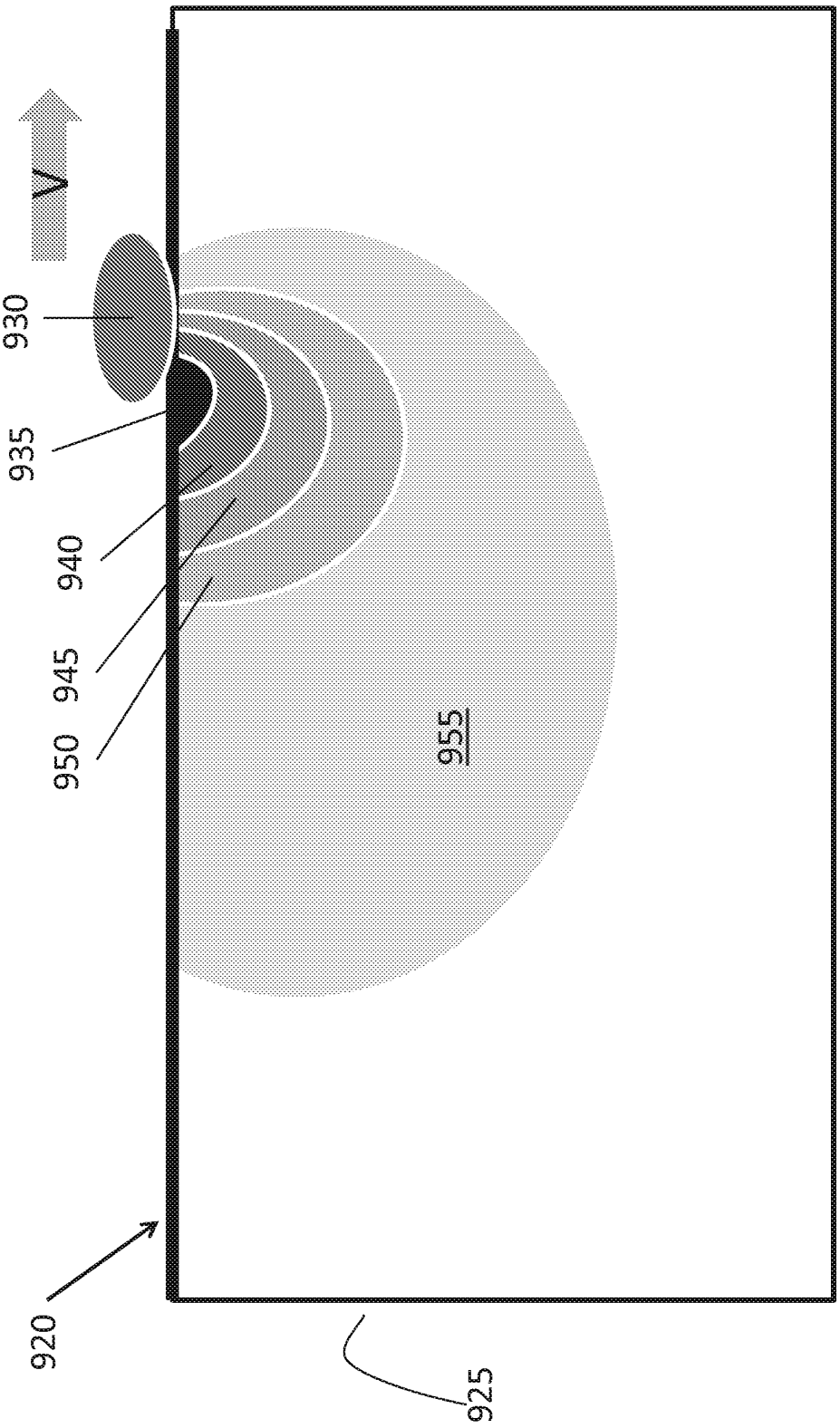

FIGURE 10