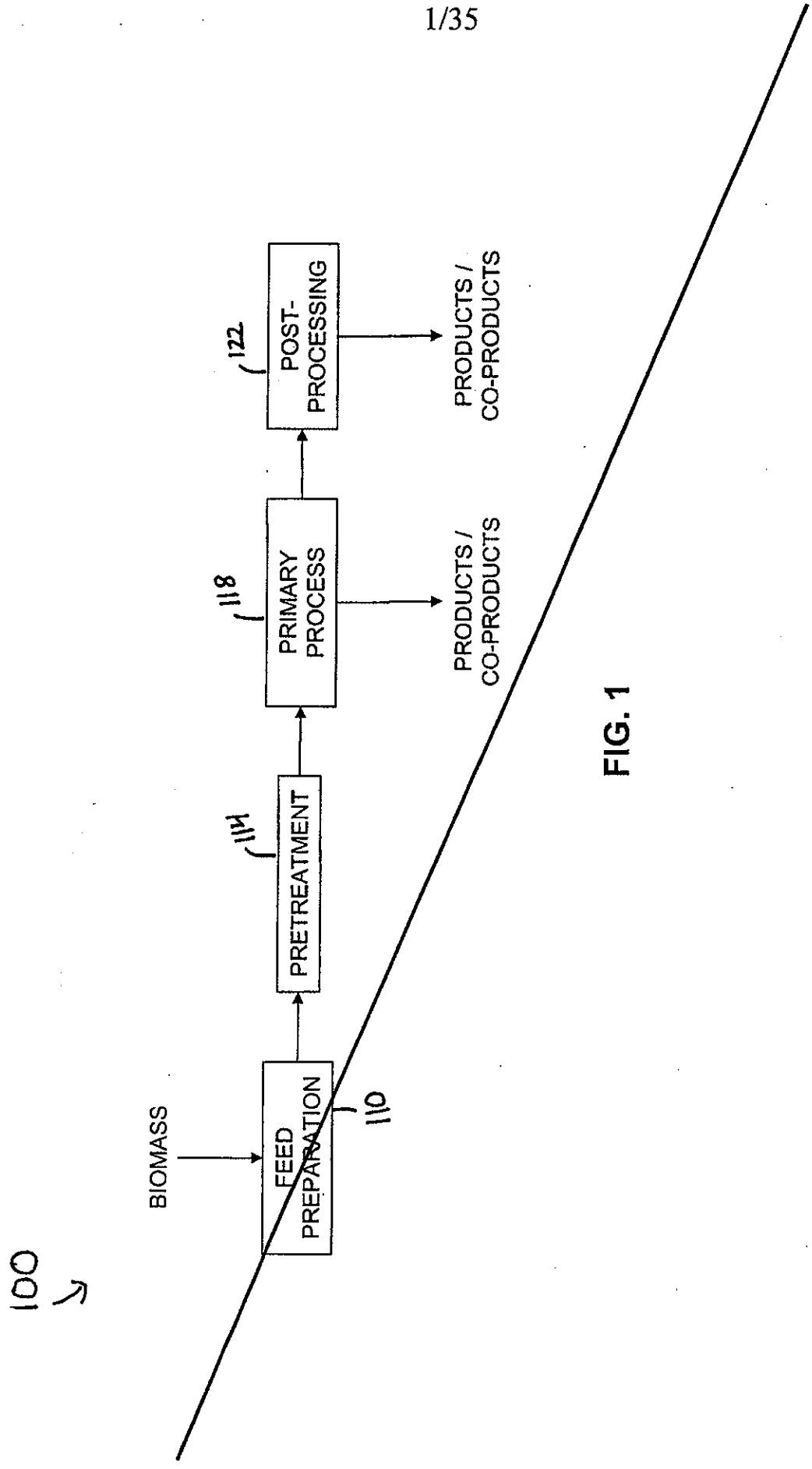
100
BIOMASS
FEED PREPARATION
110
PRETREATMENT
114
PRIMARY PROCESS
118
POST-PROCESSING
122
PRODUCTS / CO-PRODUCTS
PRODUCTS / CO-PRODUCTS

FIG. 1

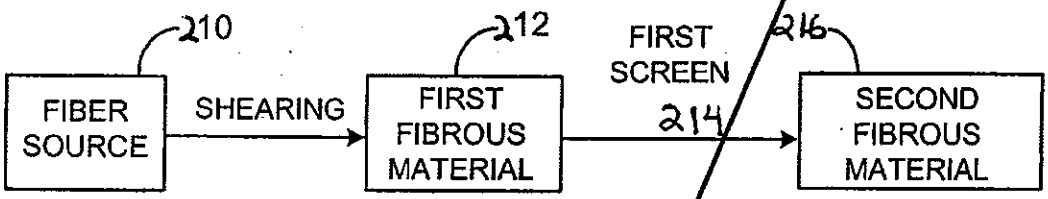
210
212
FIRST
SCREEN
216
FIBER
SOURCE
SHEARING
FIRST
FIBROUS
MATERIAL
214
SECOND
FIBROUS
MATERIAL

FIG. 2

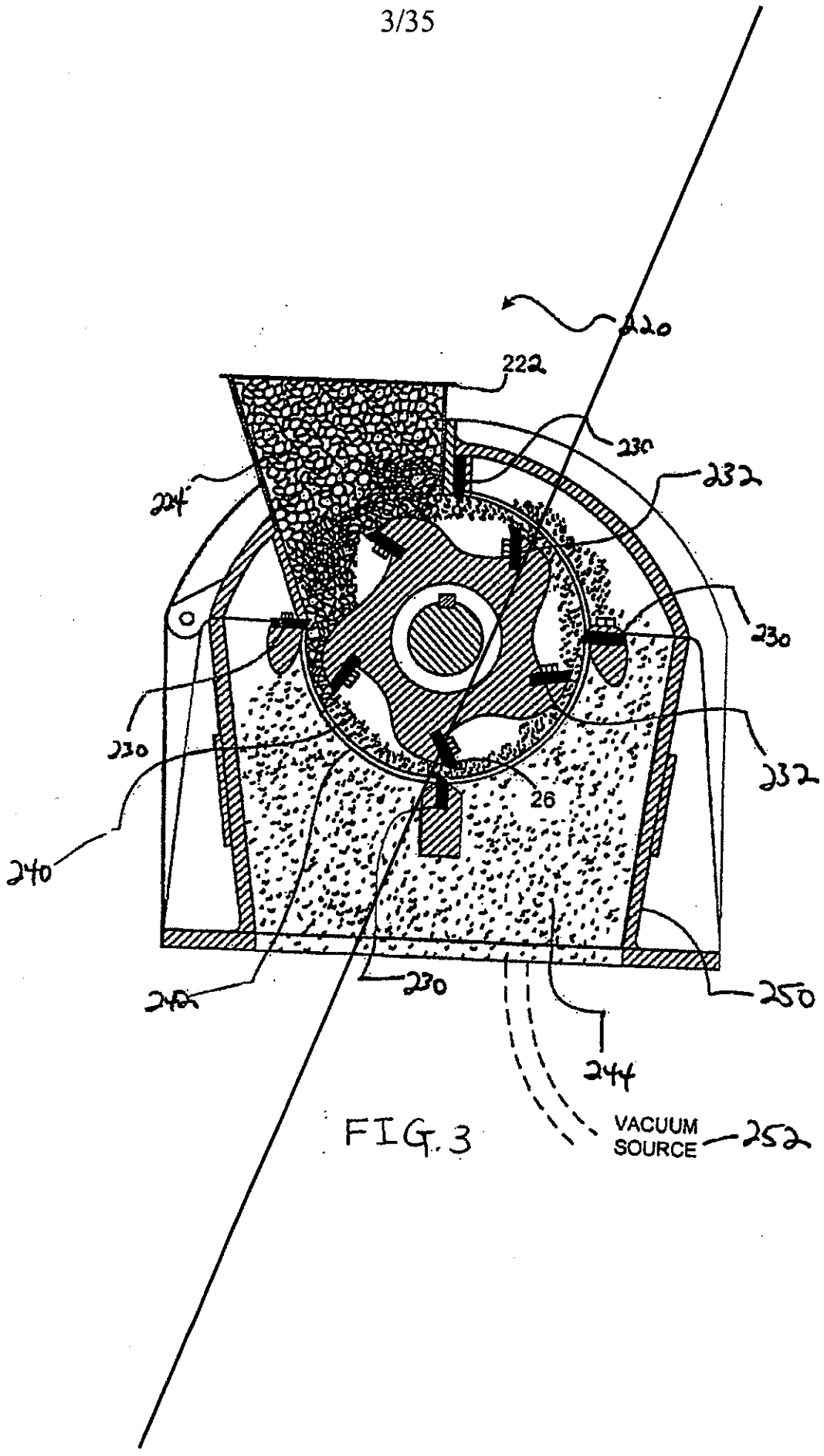
220
222
230
232
224
230
232
230
240
26
240
230
250
244
VACUUM SOURCE
252

FIG. 3

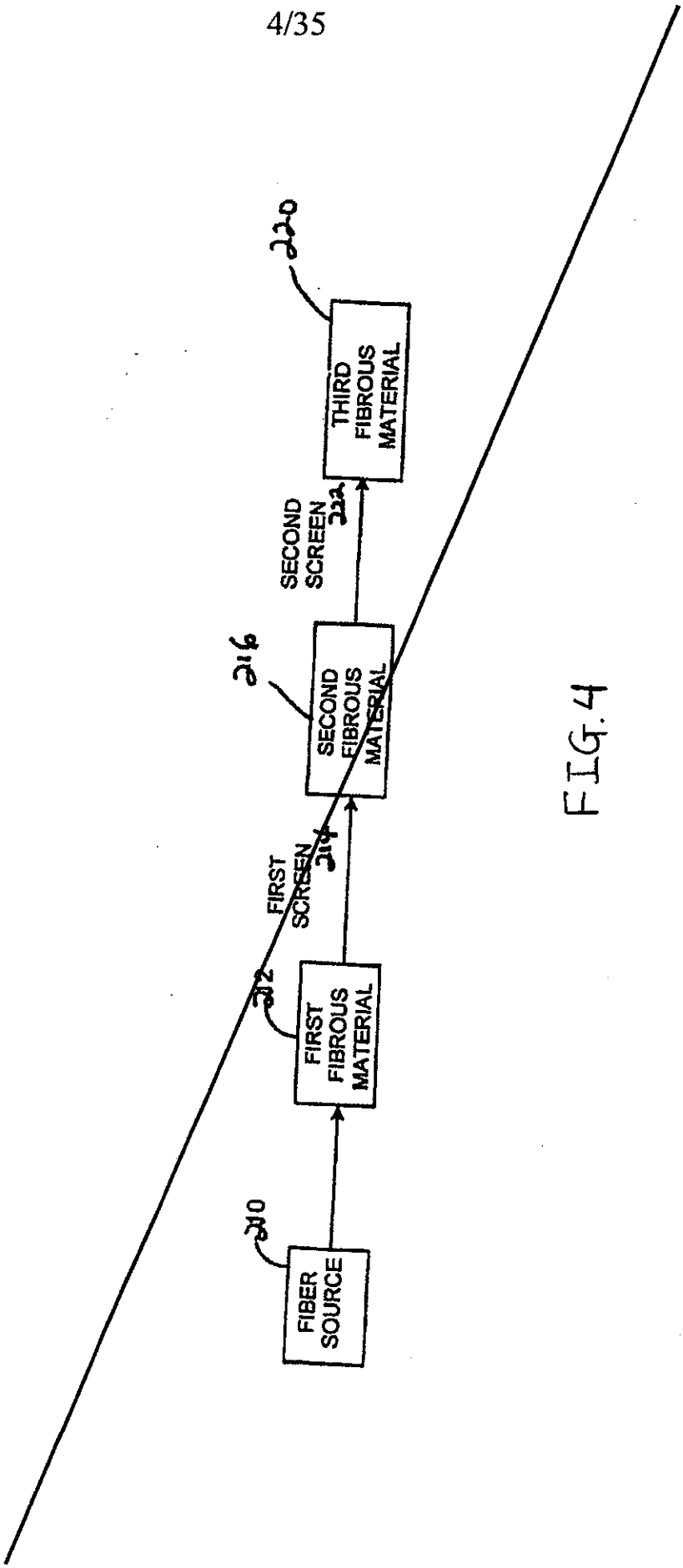
220
THIRD FIBROUS MATERIAL
SECOND SCREEN 222
216
SECOND FIBROUS MATERIAL
FIRST SCREEN 214
212
FIRST FIBROUS MATERIAL
210
FIBER SOURCE

FIG. 4

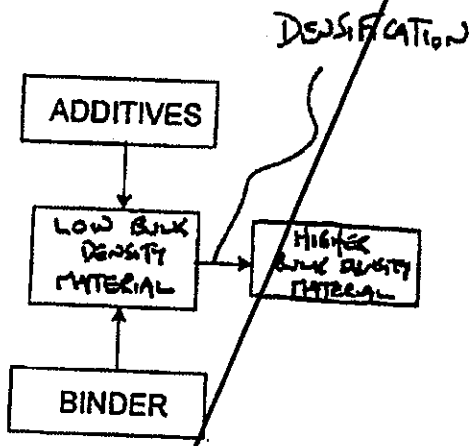
DENSIFICATION
ADDITIVES
LOW BULK DENSITY MATERIAL
HIGHER BULK DENSITY MATERIAL
BINDER

FIG 5

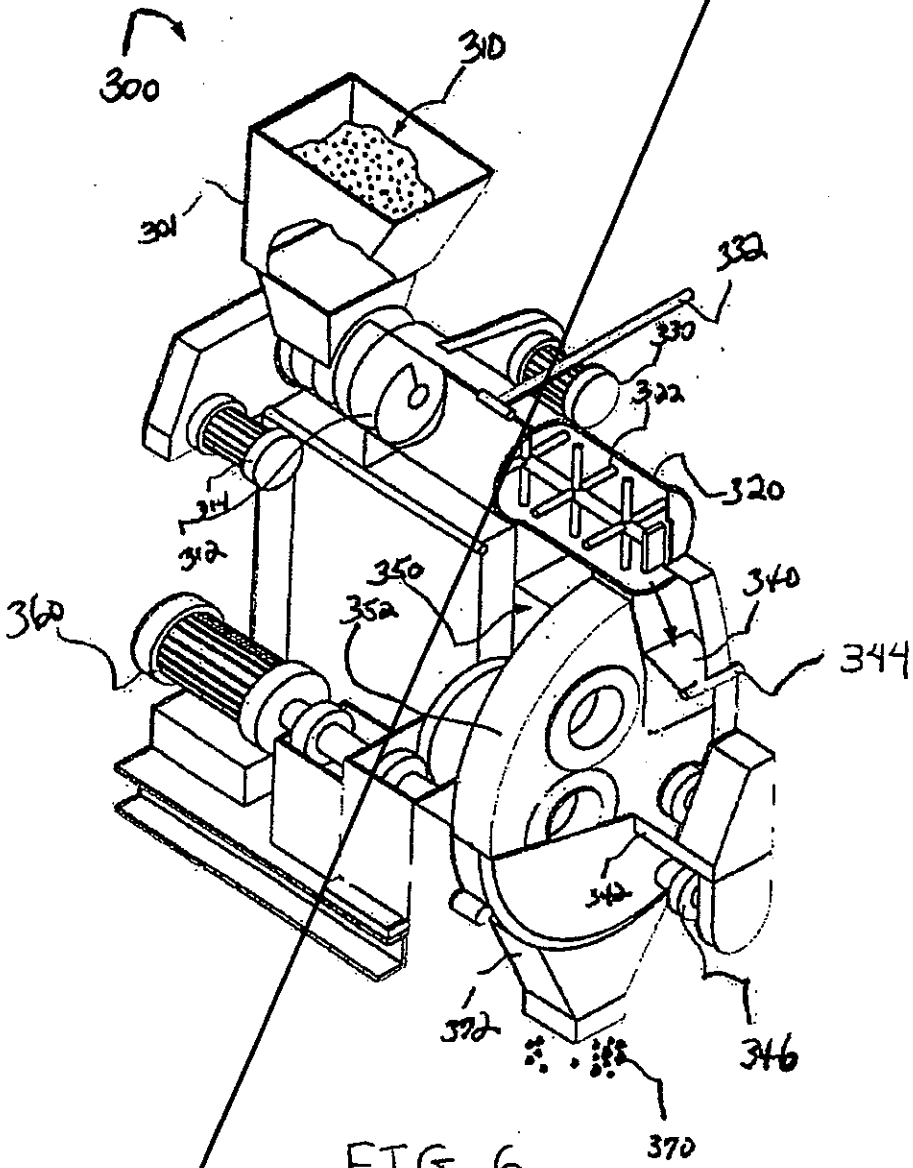
300
310
301
332
330
322
320
314
312
350
352
340
360
344
342
372
346
370

FIG. 6

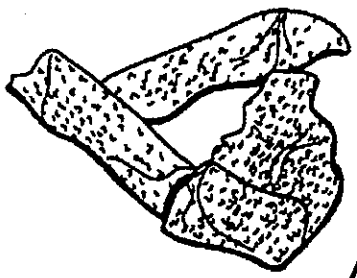

FIG. 7A

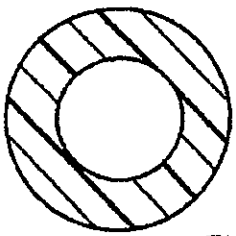

FIG. 7B

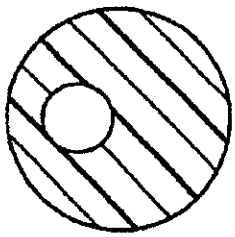

FIG. 7C

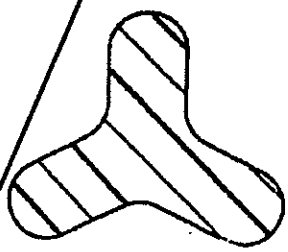

FIG. 7D

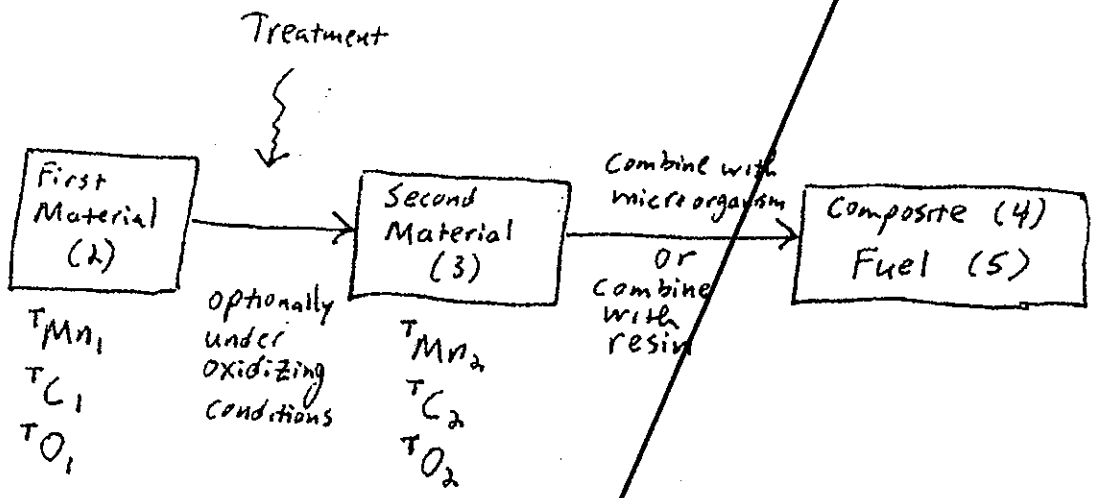
Treatment
First Material (2)
Second Material (3)
Combine with microorganism
or combine with resin
Composite (4)
Fuel (5)
optionally under oxidizing conditions
T_{Mn_1}
T_{C_1}
T_{O_1}
T_{Mn_2}
T_{C_2}
T_{O_2}

FIG. 8

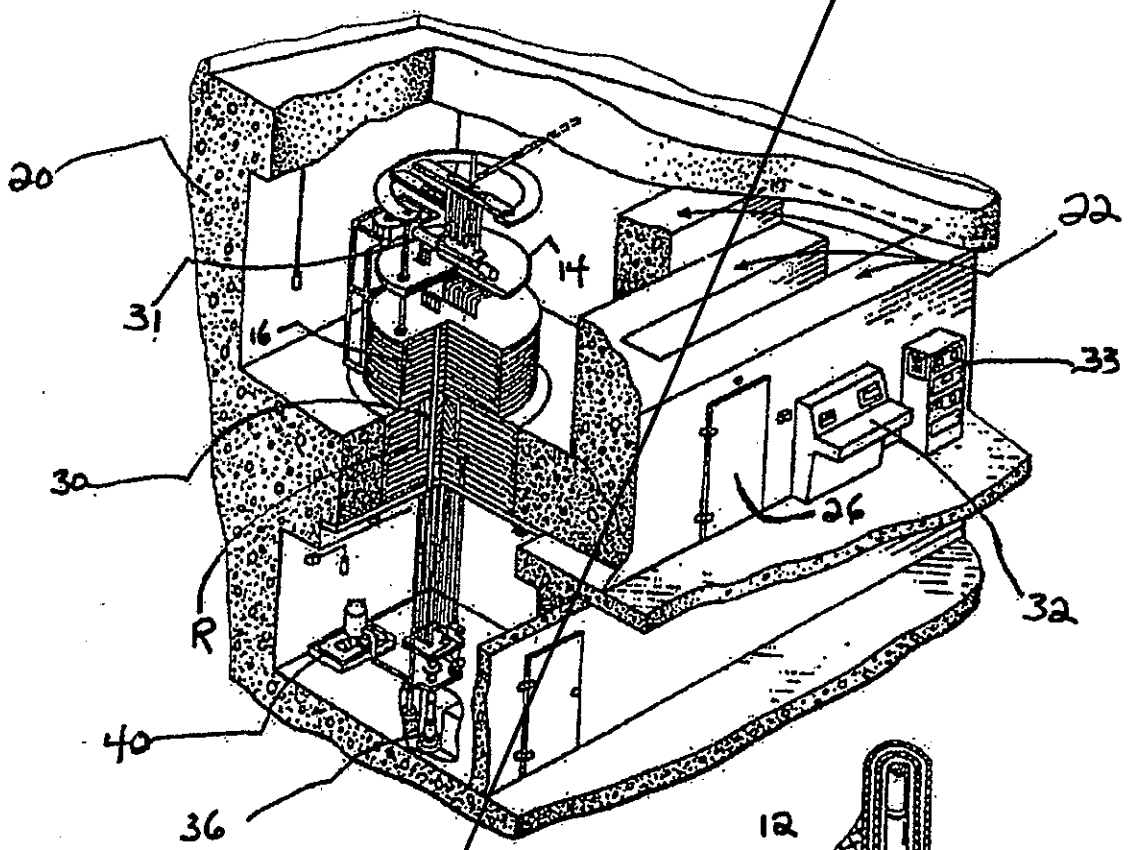

FIG. 9

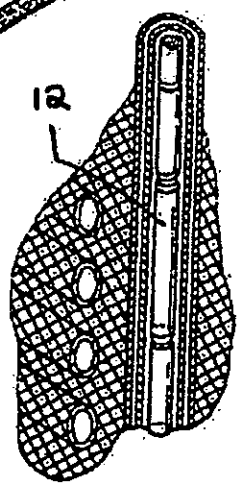

FIG. 10

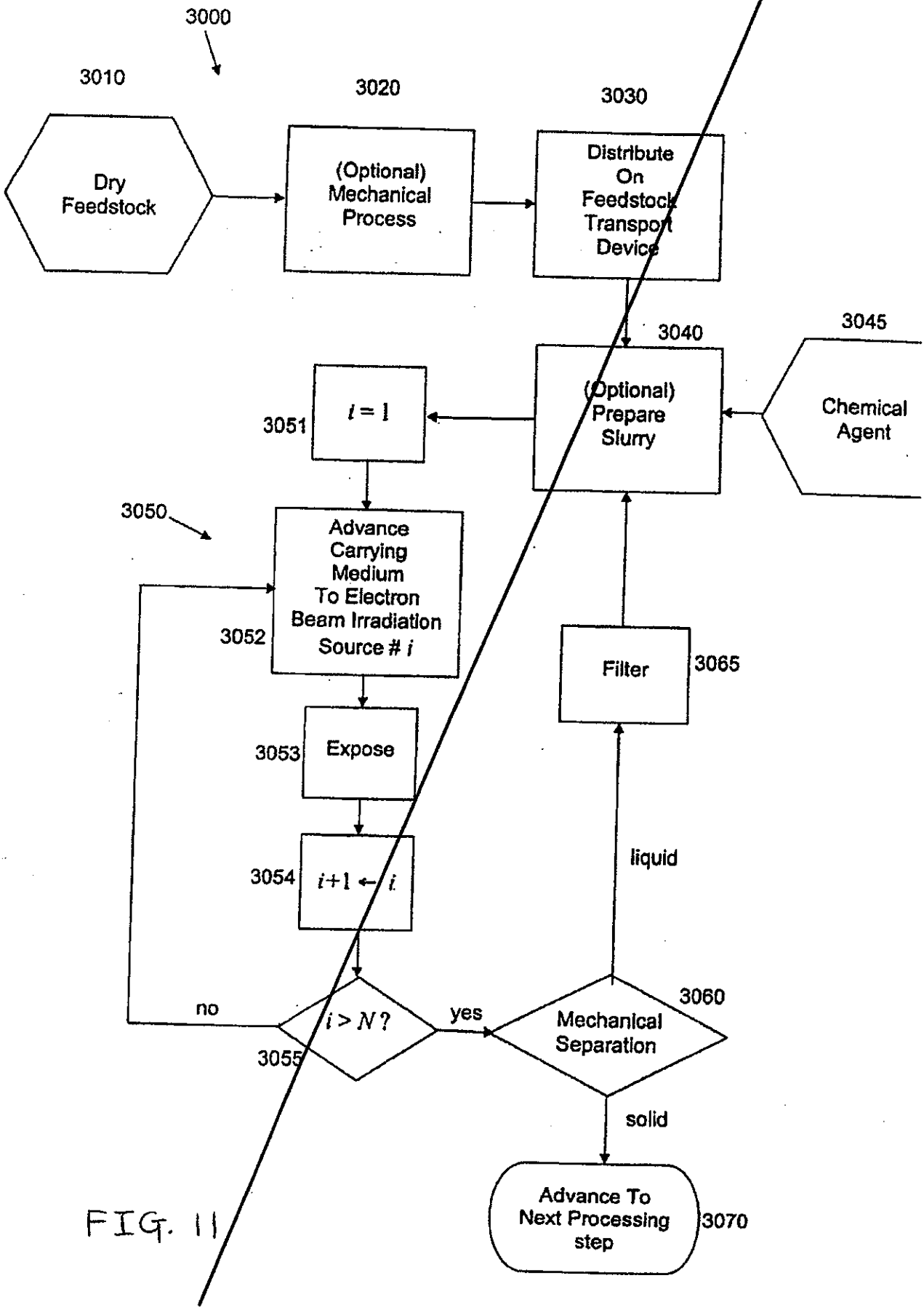
3000
3010
Dry Feedstock
3020
(Optional) Mechanical Process
3030
Distribute On Feedstock Transport Device
3040
(Optional) Prepare Slurry
3045
Chemical Agent
3051
i = 1
3050
Advance Carrying Medium To Electron Beam Irradiation Source # i
3052
3053
Expose
3054
i+1 ← i
3055
i > N ?
no
yes
3060
Mechanical Separation
liquid
Filter
3065
solid
Advance To Next Processing step
3070

FIG. 11

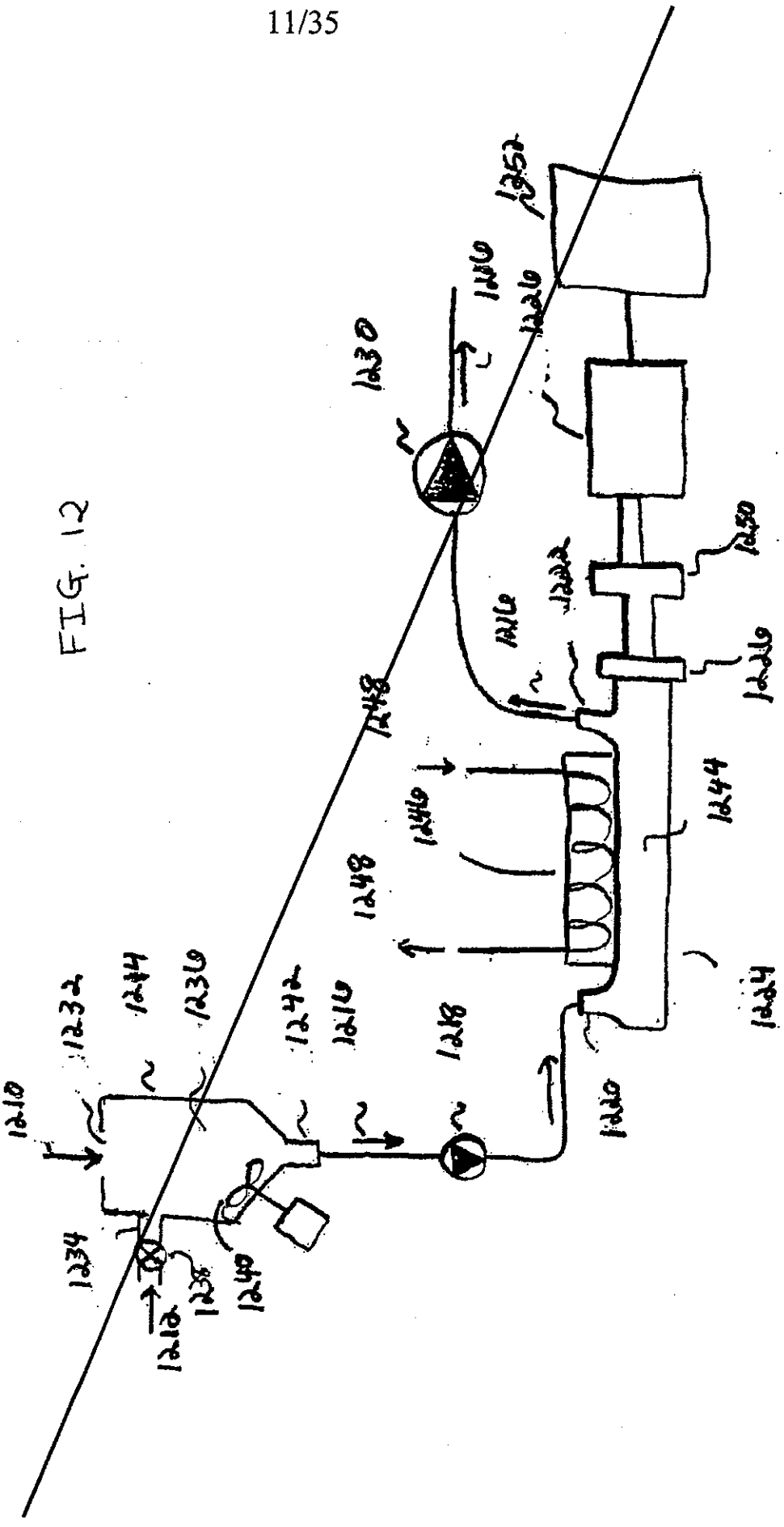
1210
1212
1234
1238
1240
1232
1244
1236
1242
1216
1218
1220
1224
1248
1246
1248
1244
1226
1222
1216
1230
1226
1252

FIG. 12

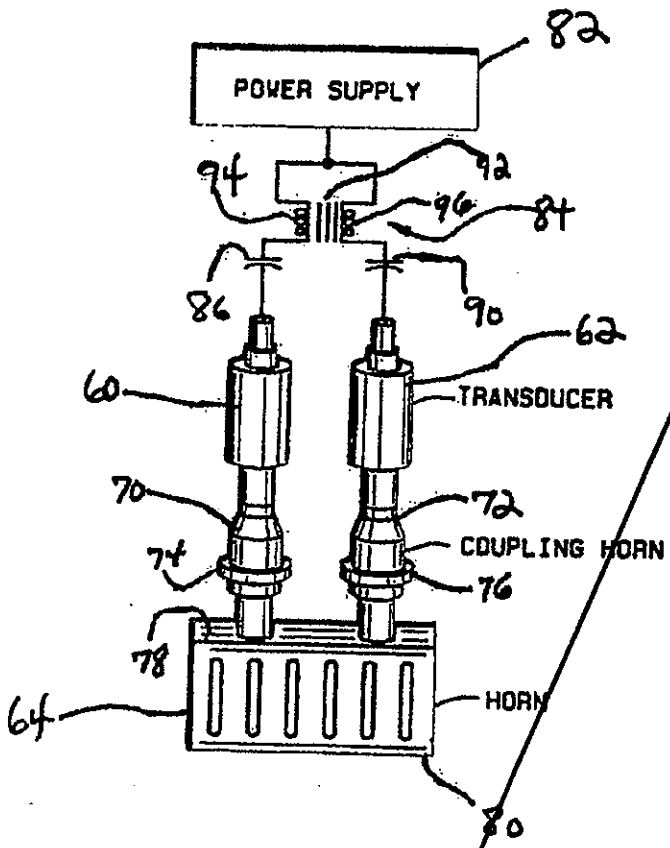
82
POWER SUPPLY
94
92
96
84
86
90
62
60
TRANSDUCER
70
72
74
COUPLING HORN
76
78
64
HORN
80

FIG 13

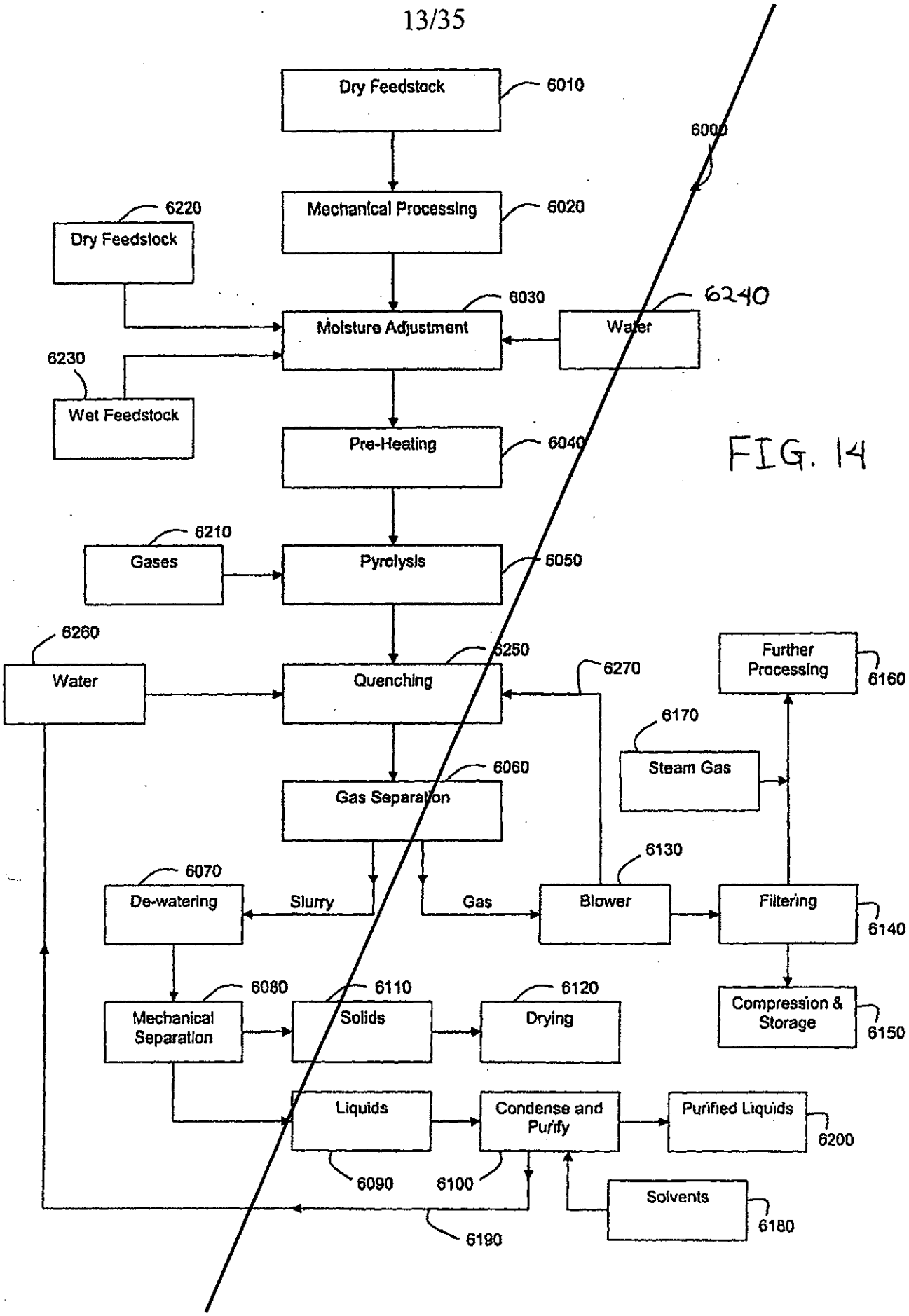
Dry Feedstock
6010
6000
Mechanical Processing
6020
6220
Dry Feedstock
Moisture Adjustment
6030
Water
6240
6230
Wet Feedstock
Pre-Heating
6040
Gases
6210
Pyrolysis
6050
6260
Water
Quenching
6250
6270
Further Processing
6160
6170
Steam Gas
Gas Separation
6060
6130
6070
De-watering
Slurry
Gas
Blower
Filtering
6140
6080
Mechanical Separation
6110
Solids
6120
Drying
Compression & Storage
6150
Liquids
Condense and Purify
Purified Liquids
6200
6090
6100
Solvents
6180
6190

FIG. 14

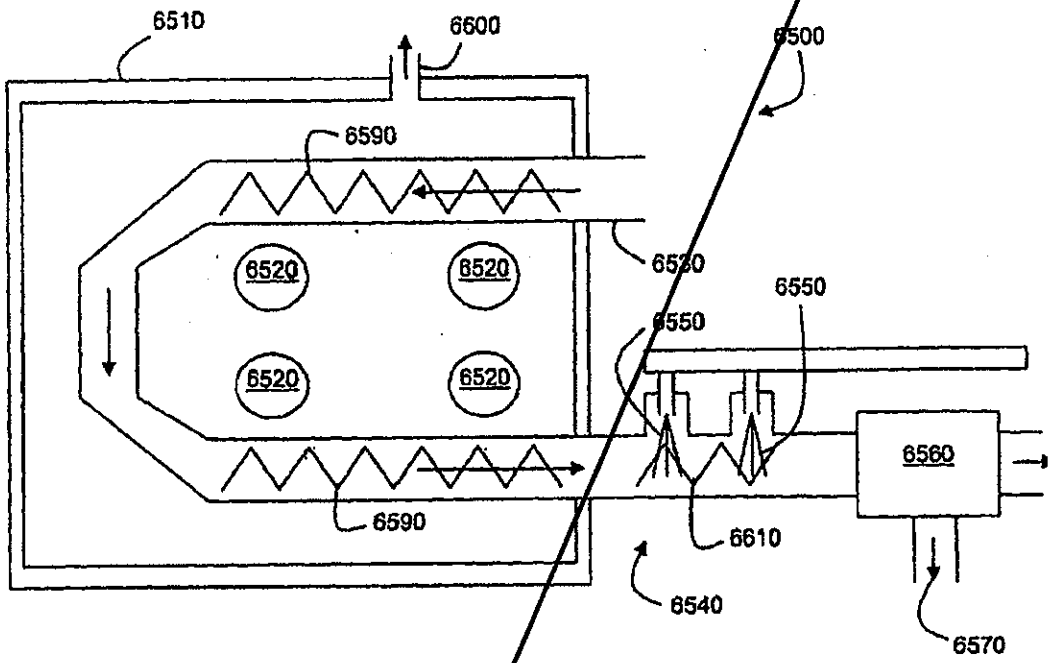
6510
6600
6500
6590
6520
6520
6520
6520
6520
6550
6550
6560
6590
6610
6540
6570

FIG. 15

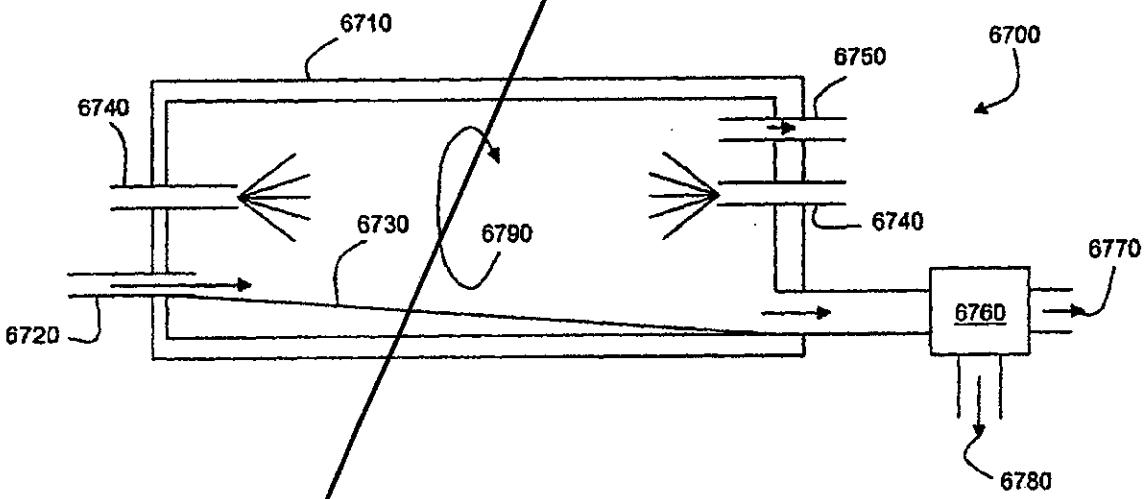
6710
6700
6750
6740
6740
6730
6790
6770
6760
6720
6780

FIG. 16

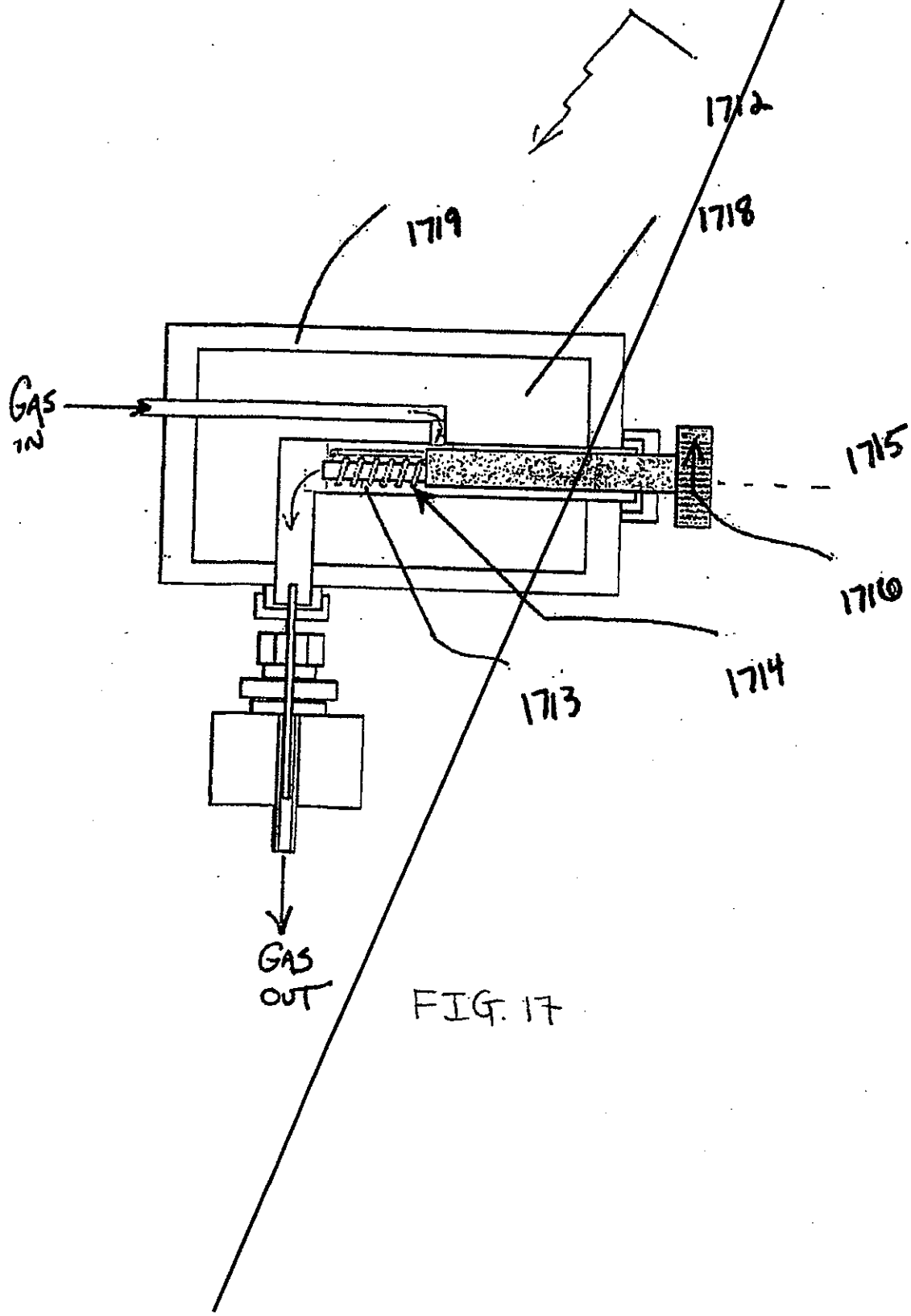

FIG. 17

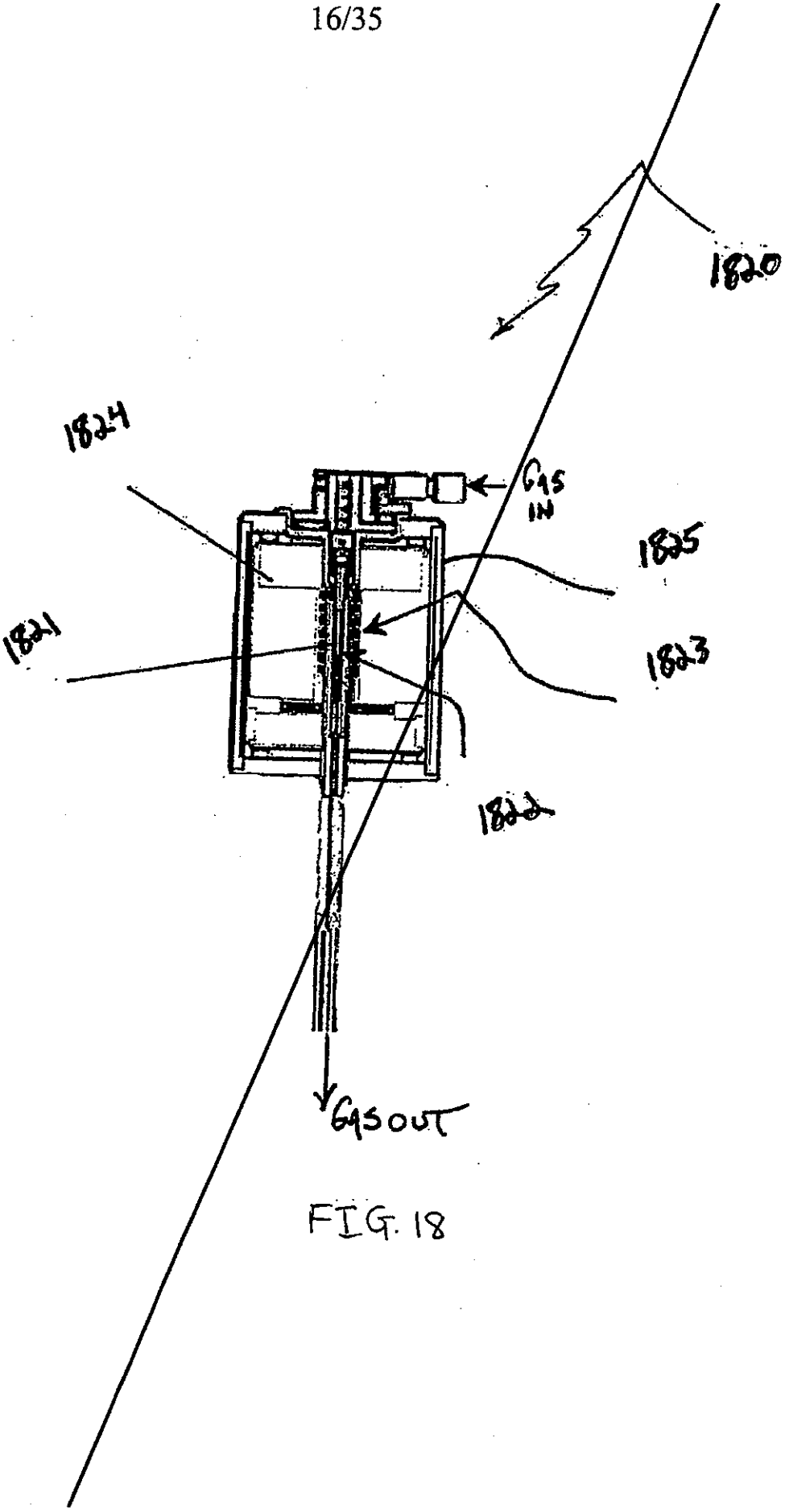

FIG. 18

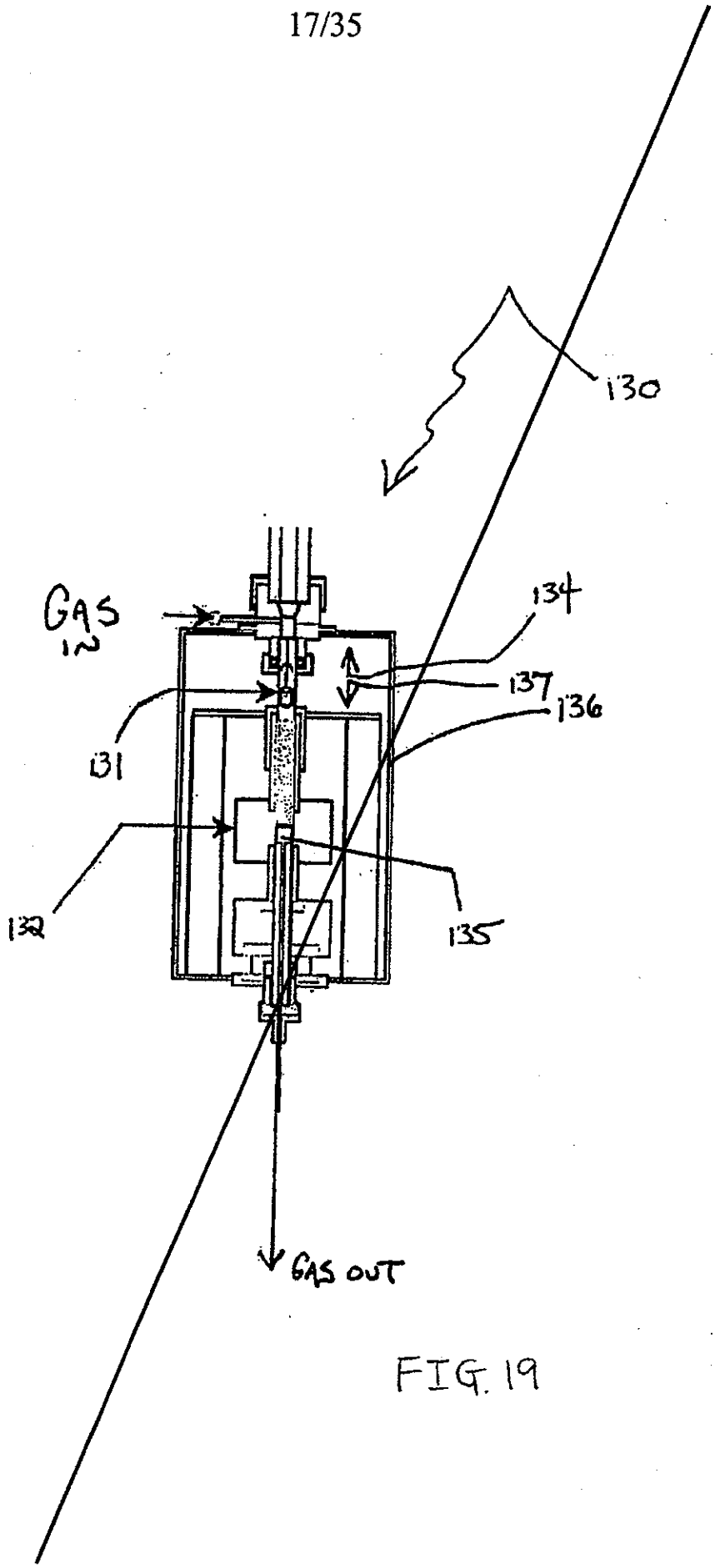

FIG. 19

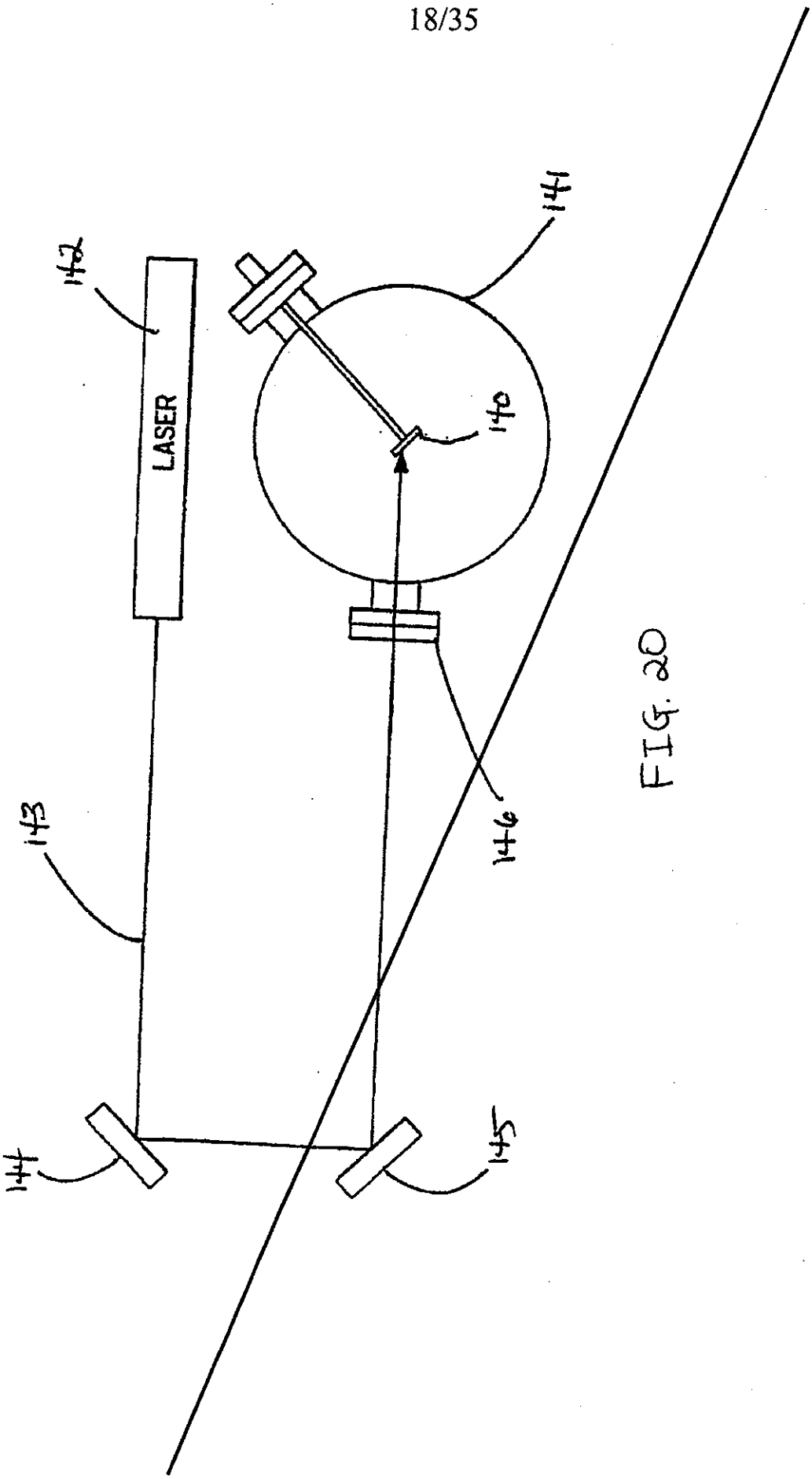

FIG. 20

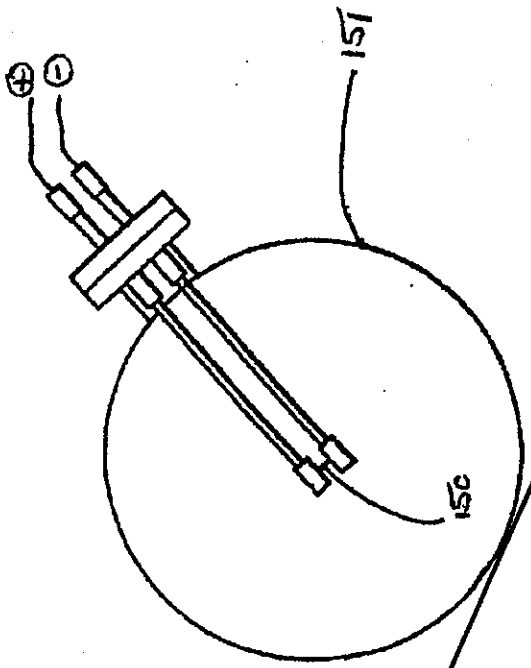

FIG. 21

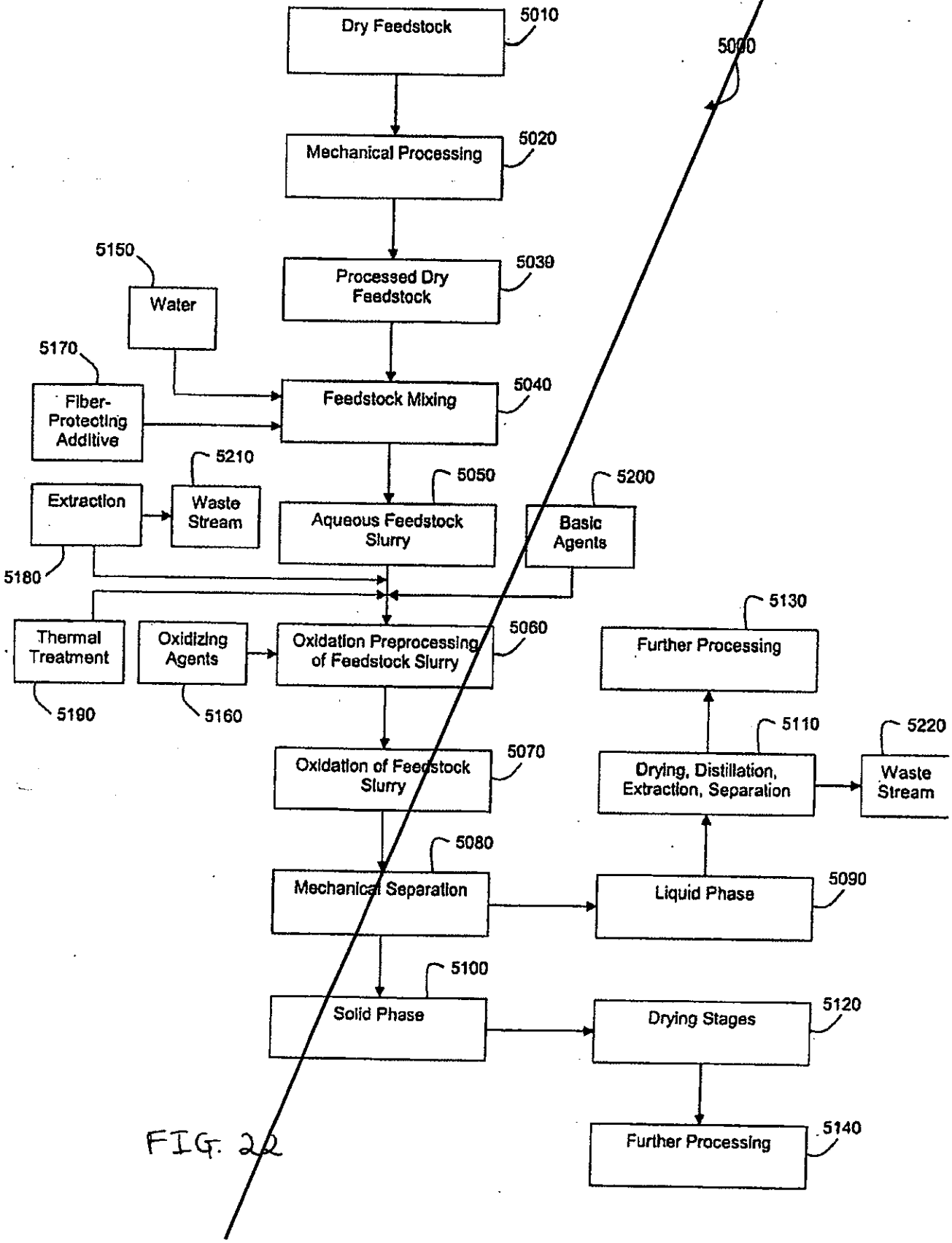
Dry Feedstock
5010
5000
Mechanical Processing
5020
5150
Water
Processed Dry Feedstock
5030
5170
Fiber-Protecting Additive
Feedstock Mixing
5040
5210
Extraction
Waste Stream
5050
5200
Aqueous Feedstock Slurry
Basic Agents
5180
Thermal Treatment
Oxidizing Agents
Oxidation Preprocessing of Feedstock Slurry
5060
5130
Further Processing
5190
5160
5110
5220
Oxidation of Feedstock Slurry
5070
Drying, Distillation, Extraction, Separation
Waste Stream
5080
Mechanical Separation
Liquid Phase
5090
5100
Solid Phase
Drying Stages
5120
Further Processing
5140

FIG. 2

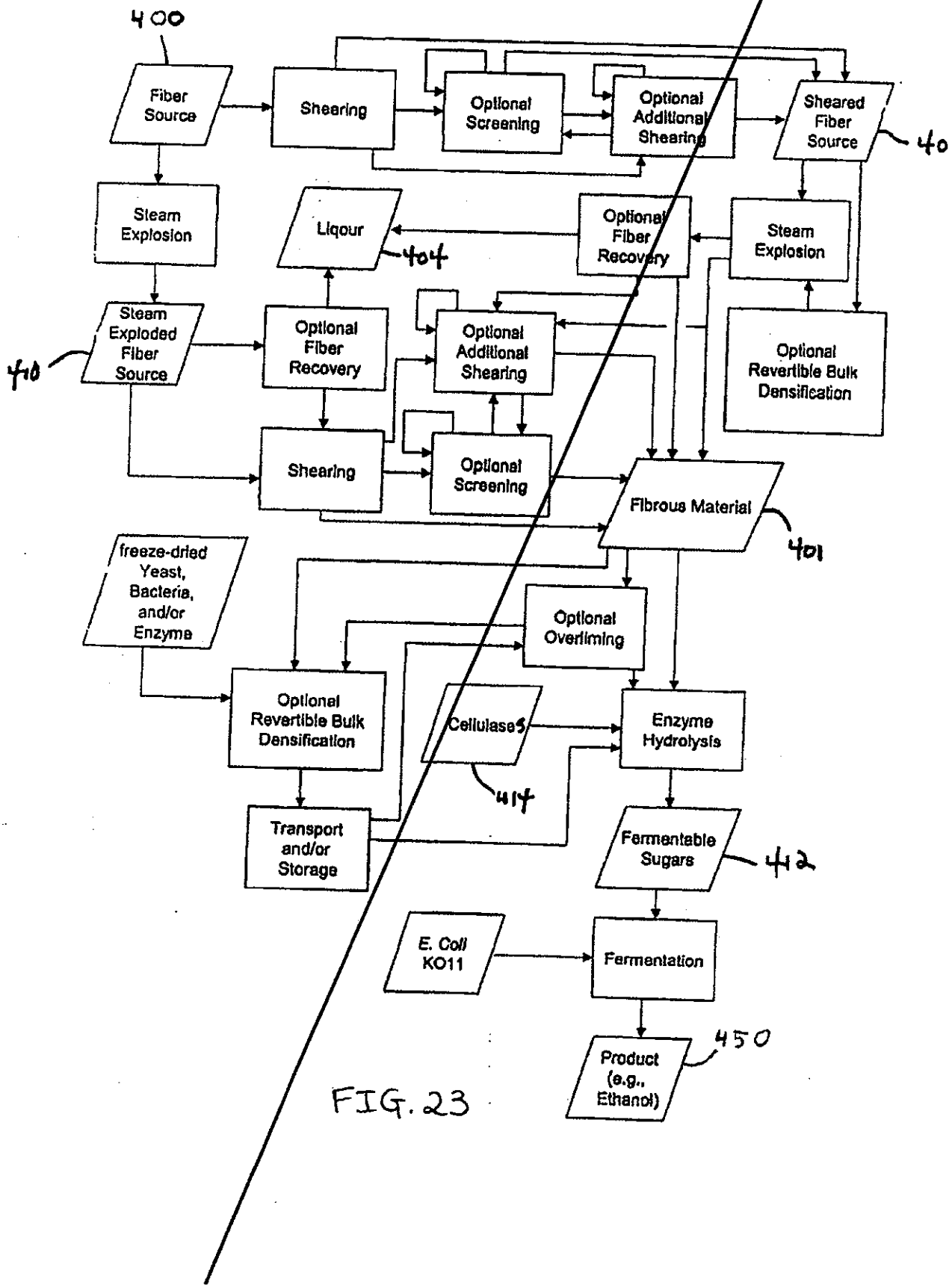
400
Fiber Source
Shearing
Optional Screening
Optional Additional Shearing
Sheared Fiber Source
40
Steam Explosion
Liquor
404
Optional Fiber Recovery
Steam Explosion
Steam Exploded Fiber Source
410
Optional Fiber Recovery
Optional Additional Shearing
Optional Revertible Bulk Densification
Shearing
Optional Screening
Fibrous Material
401
freeze-dried Yeast, Bacteria, and/or Enzyme
Optional Overliming
Optional Revertible Bulk Densification
Cellulases
414
Enzyme Hydrolysis
Transport and/or Storage
Fermentable Sugars
412
E. Coli KO11
Fermentation
Product (e.g., Ethanol)
450

FIG. 23

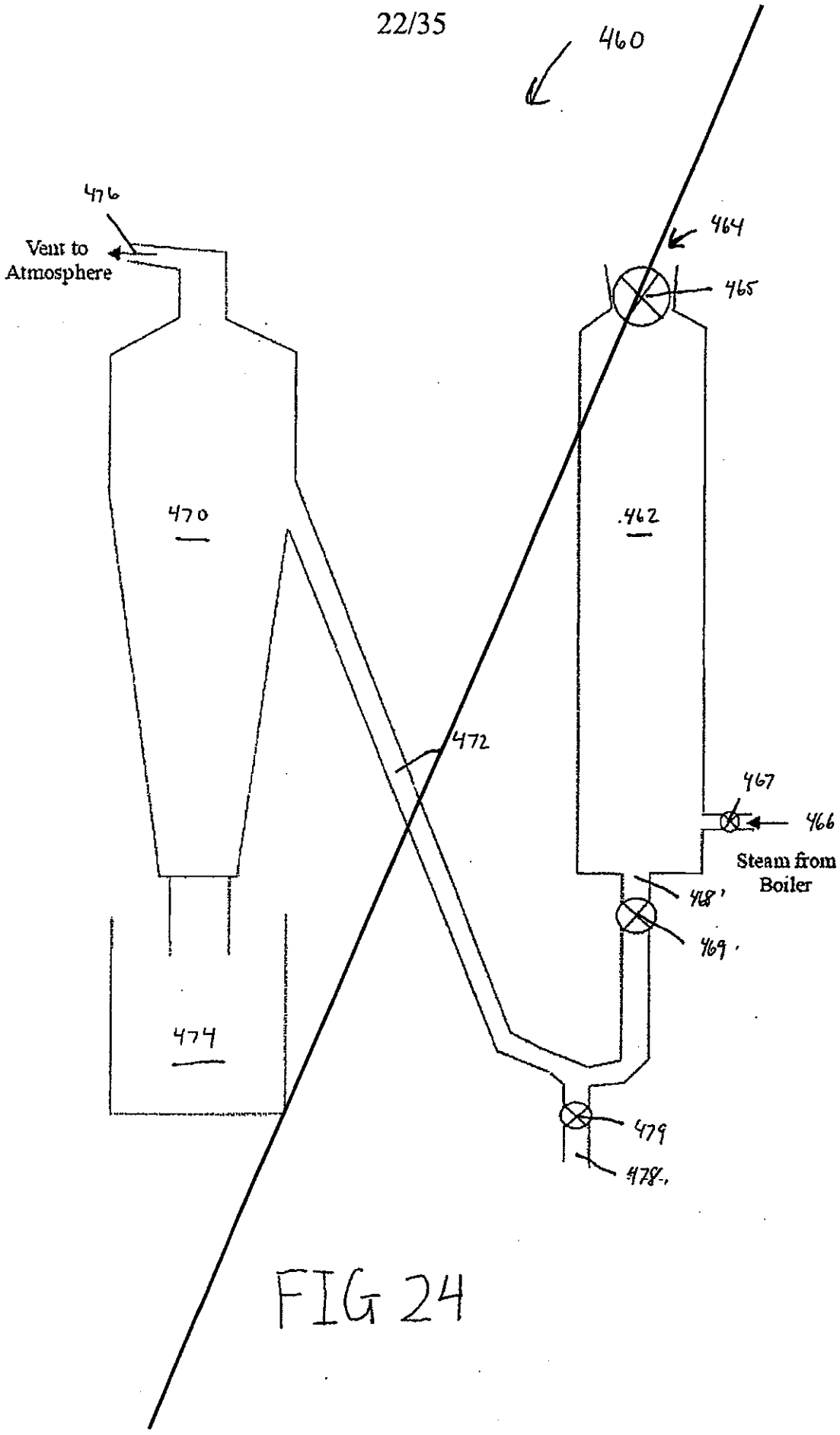
460
476
Vent to Atmosphere
464
465
470
462
472
467
466
Steam from Boiler
468
469
474
479
478

FIG 24

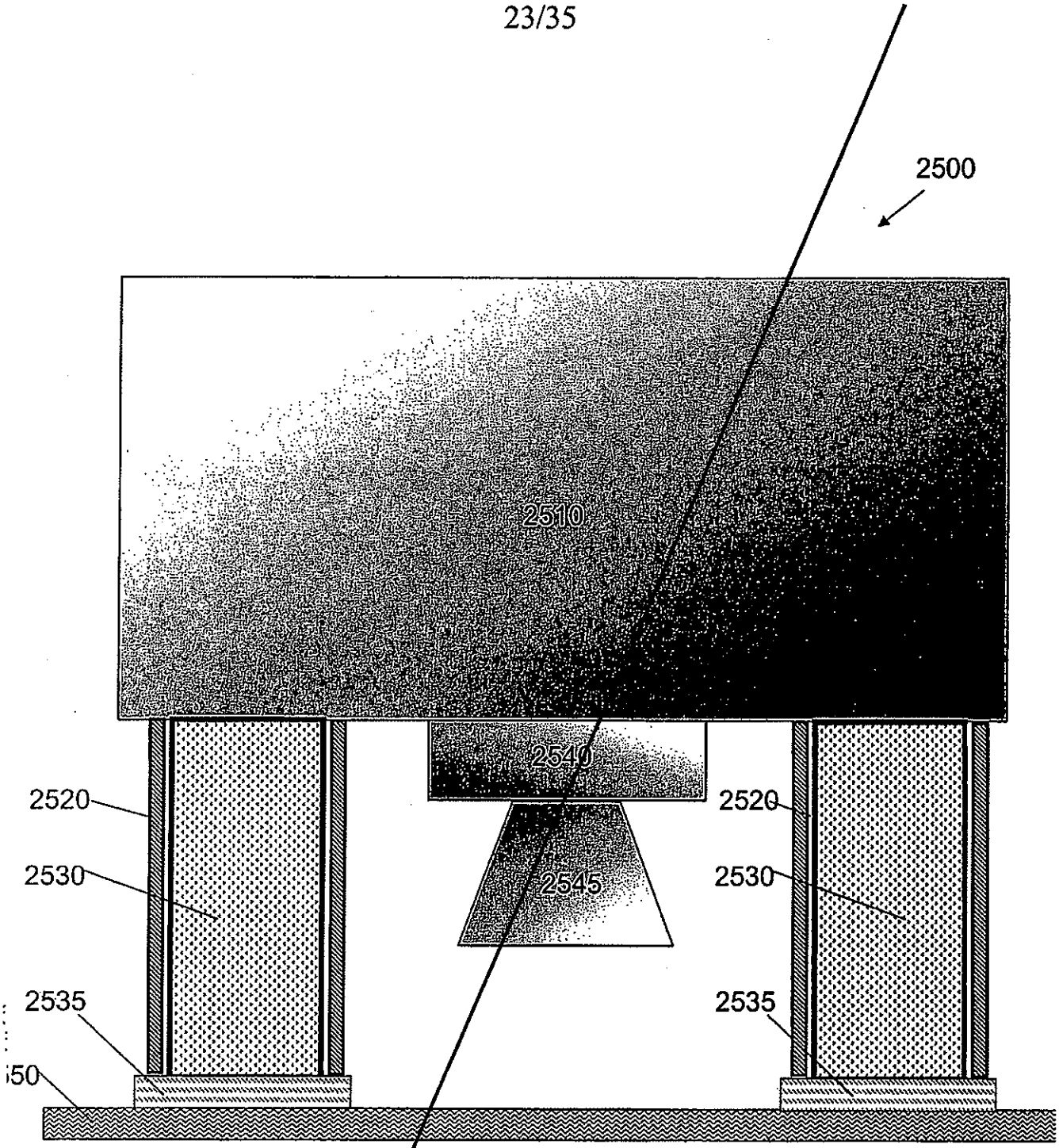

FIG. 25



FIG. 26



FIG. 27

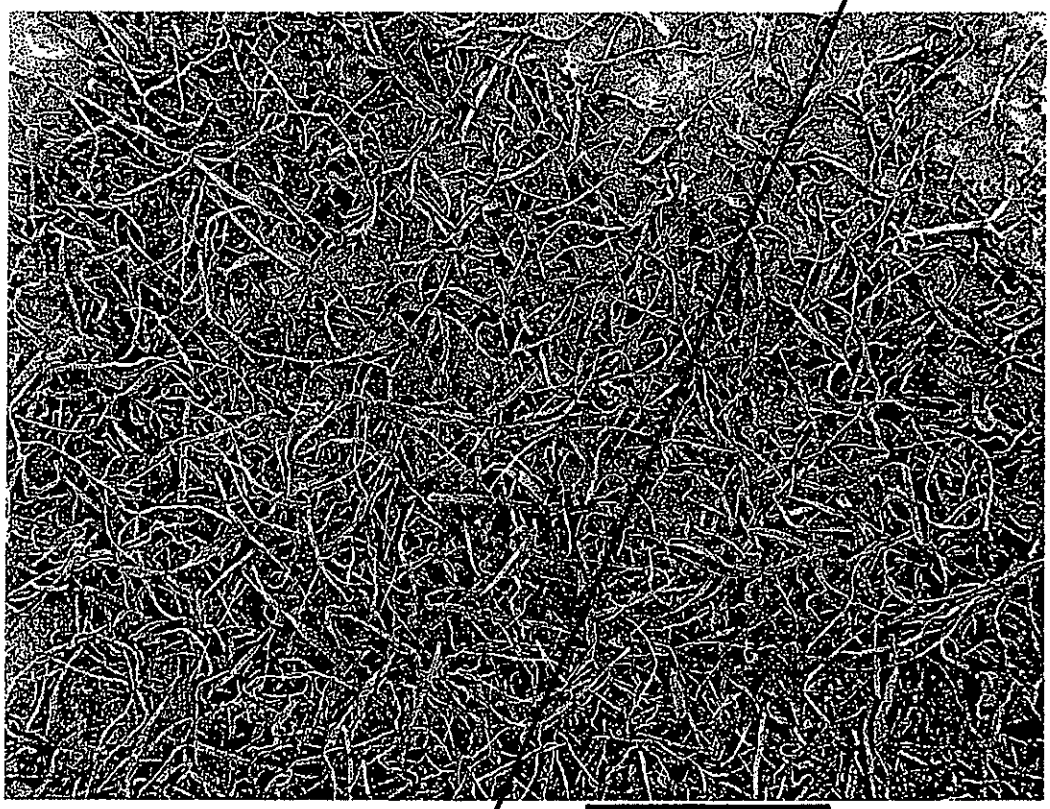

FIG. 28

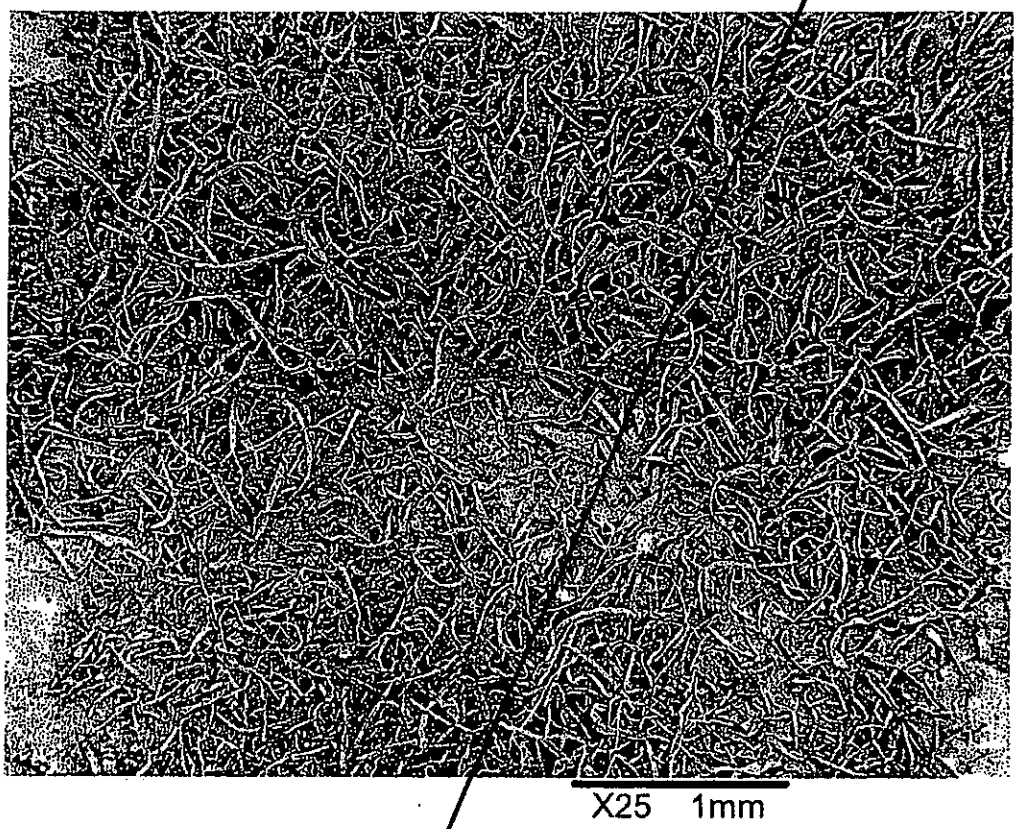

FIG. 29

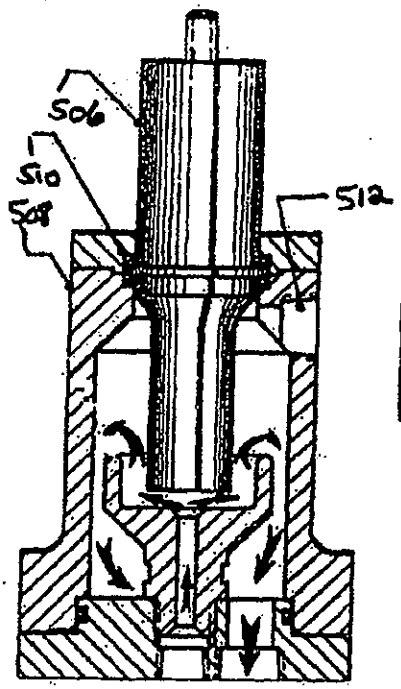

FIG. 31

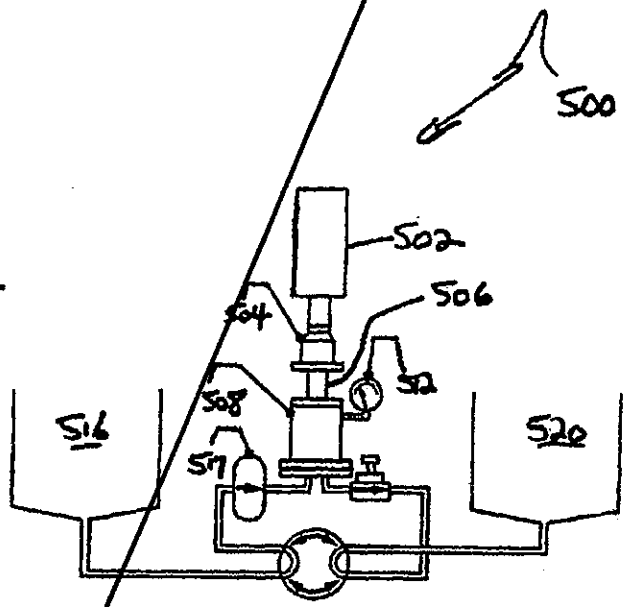

FIG. 30


G132'
SEI
1.0kV
X1,000
10μm
WD 10.0mm

FIG. 32

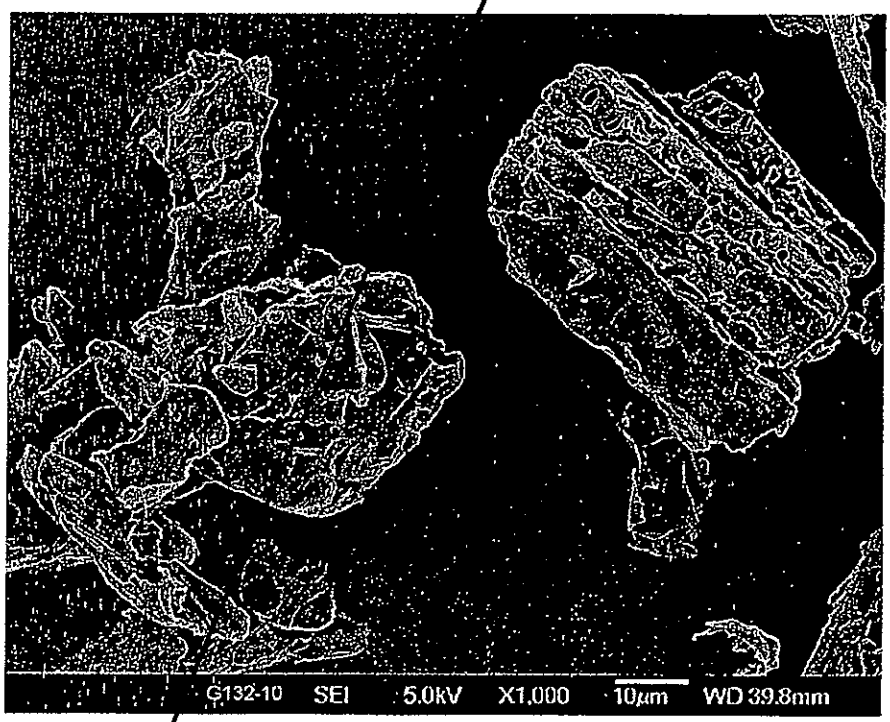
G132-10
SEI
5.0kV
X1,000
10μm
WD 39.8mm

FIG. 33

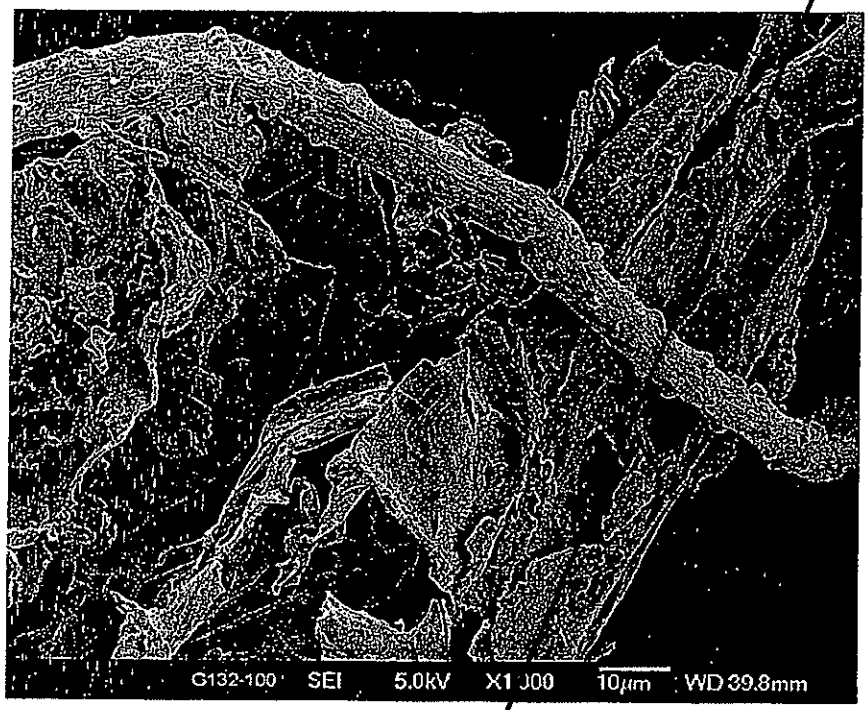
G132-100 SEI 5.0kV X1,000 10μm WD 39.8mm

FIG. 34


G10-ER 4270 SEI 5.0kV X1,000 10μm WD 40.3mm

FIG. 35

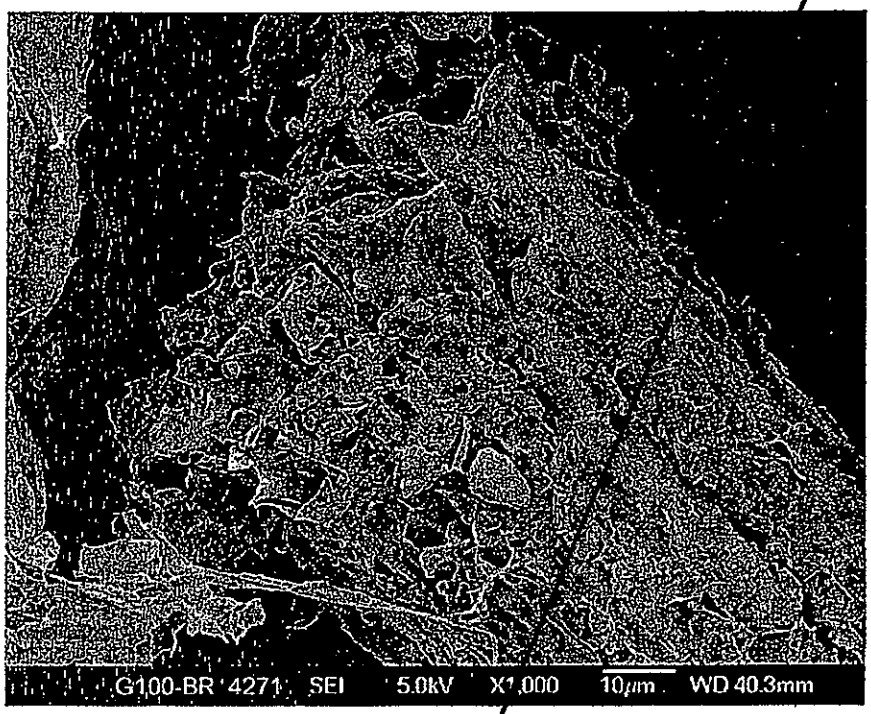

FIG. 36

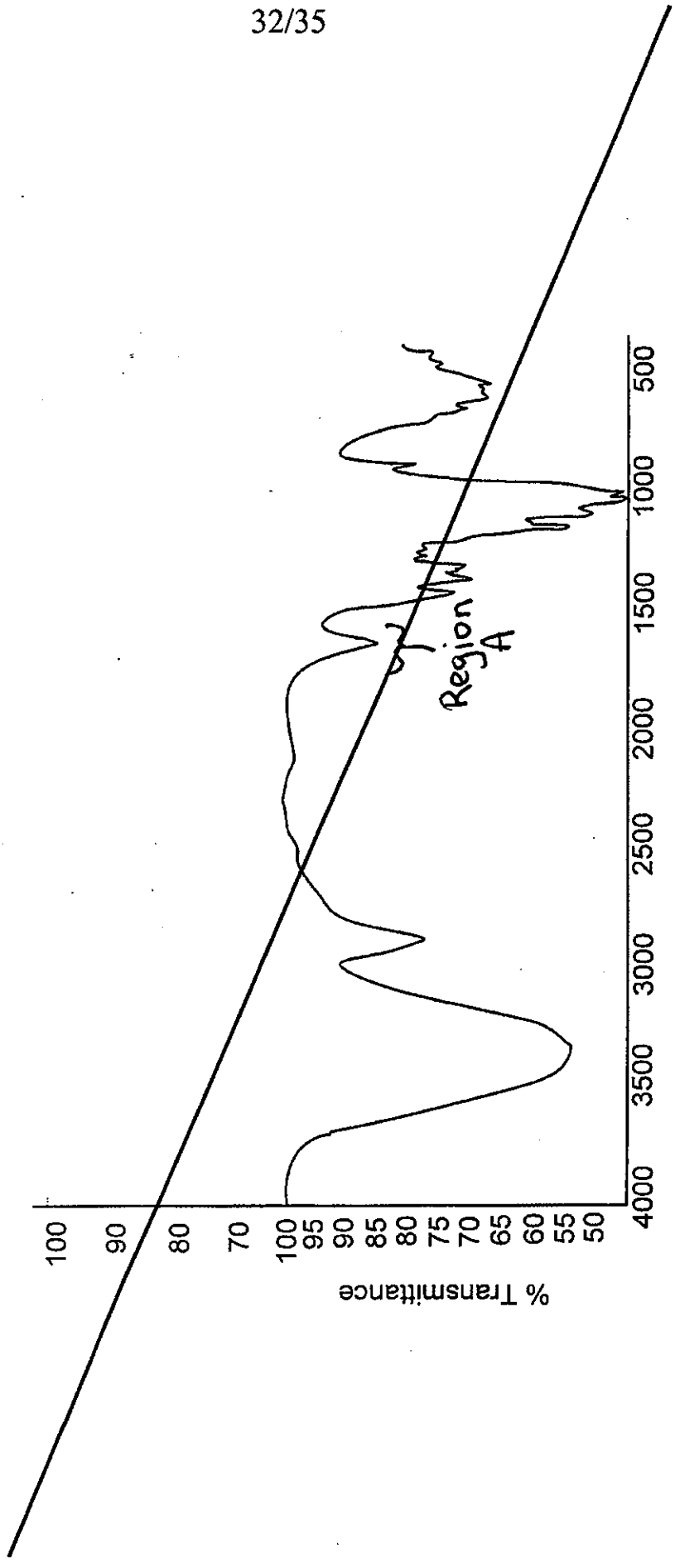
% Transmittance
100
90
80
70
100
95
90
85
80
75
70
65
60
55
50
4000
3500
3000
2500
2000
1500
1000
500
Wavenumbers (cm-1)
Region A

FIG. 37

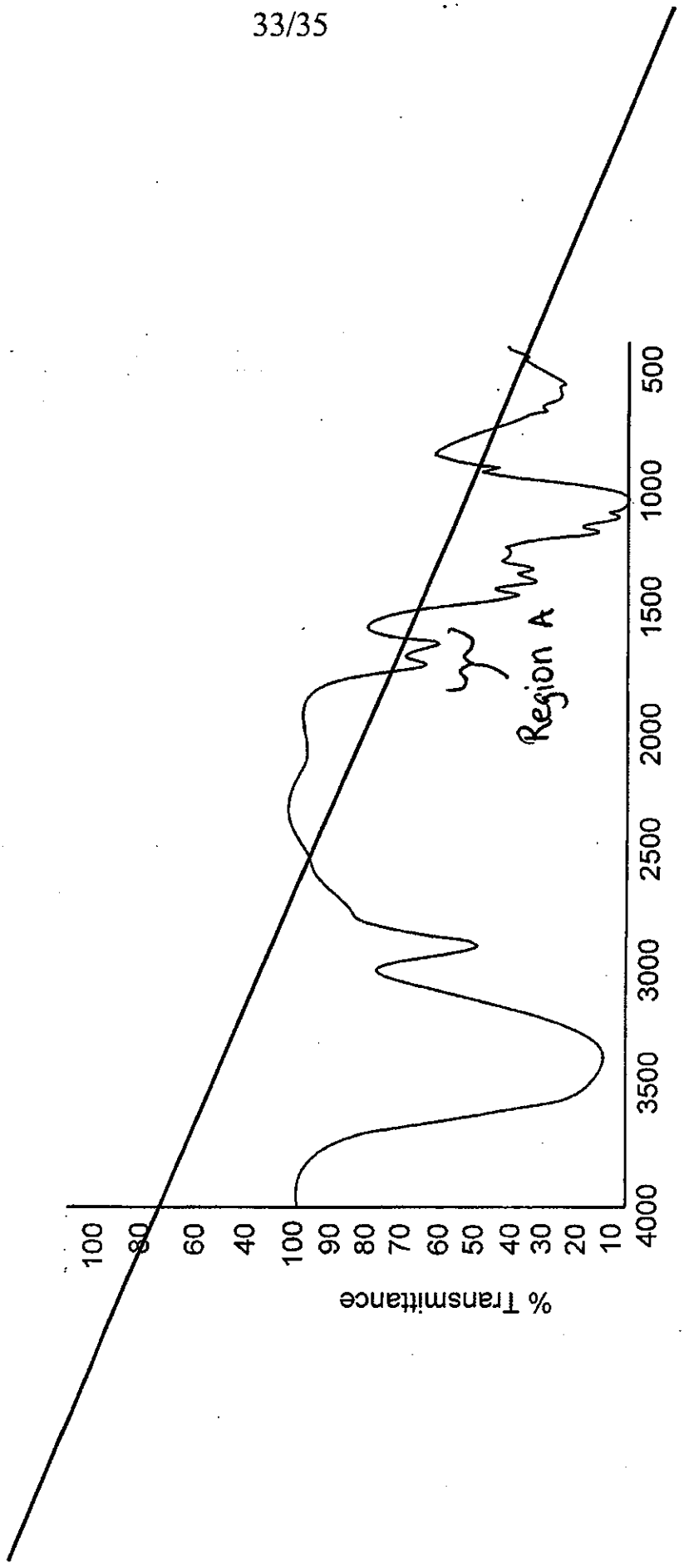
% Transmittance
100
80
60
40
100
90
80
70
60
50
40
30
20
10
4000
3500
3000
2500
2000
1500
1000
500
Wavenumbers (cm-1)
Region A

FIG. 38

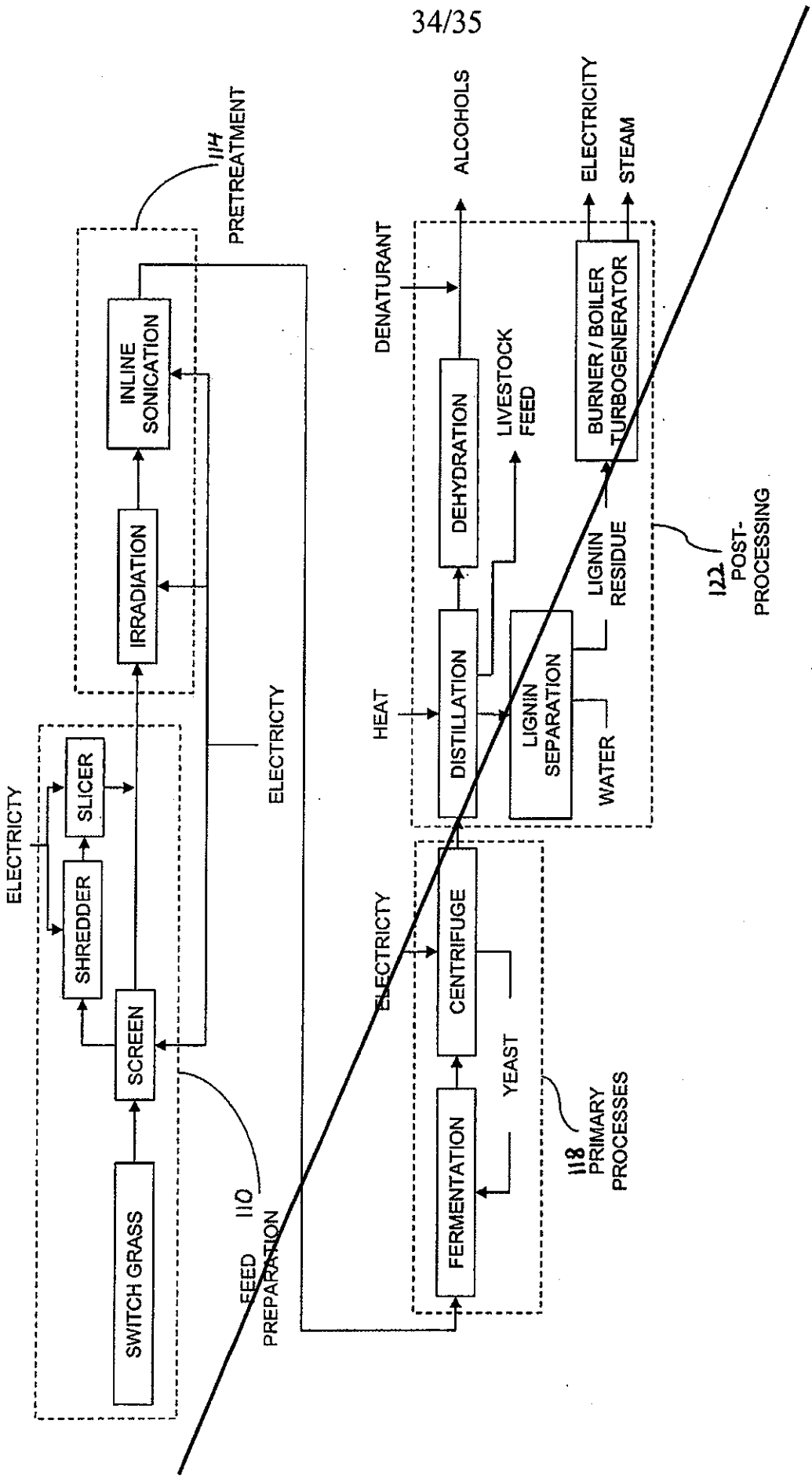
SWITCH GRASS
SHREDDER
SLICER
ELECTRICTY
SCREEN
IRRADIATION
INLINE SONICATION
114 PRETREATMENT
ELECTRICTY
110 FEED PREPARATION
ELECTRICTY
CENTRIFUGE
FERMENTATION
YEAST
118 PRIMARY PROCESSES
HEAT
DISTILLATION
LIGNIN SEPARATION
WATER
LIGNIN RESIDUE
DEHYDRATION
DENATURANT
ALCOHOLS
LIVESTOCK FEED
BURNER / BOILER TURBOGENERATOR
ELECTRICITY
STEAM
122 POST-PROCESSING

FIG. 39

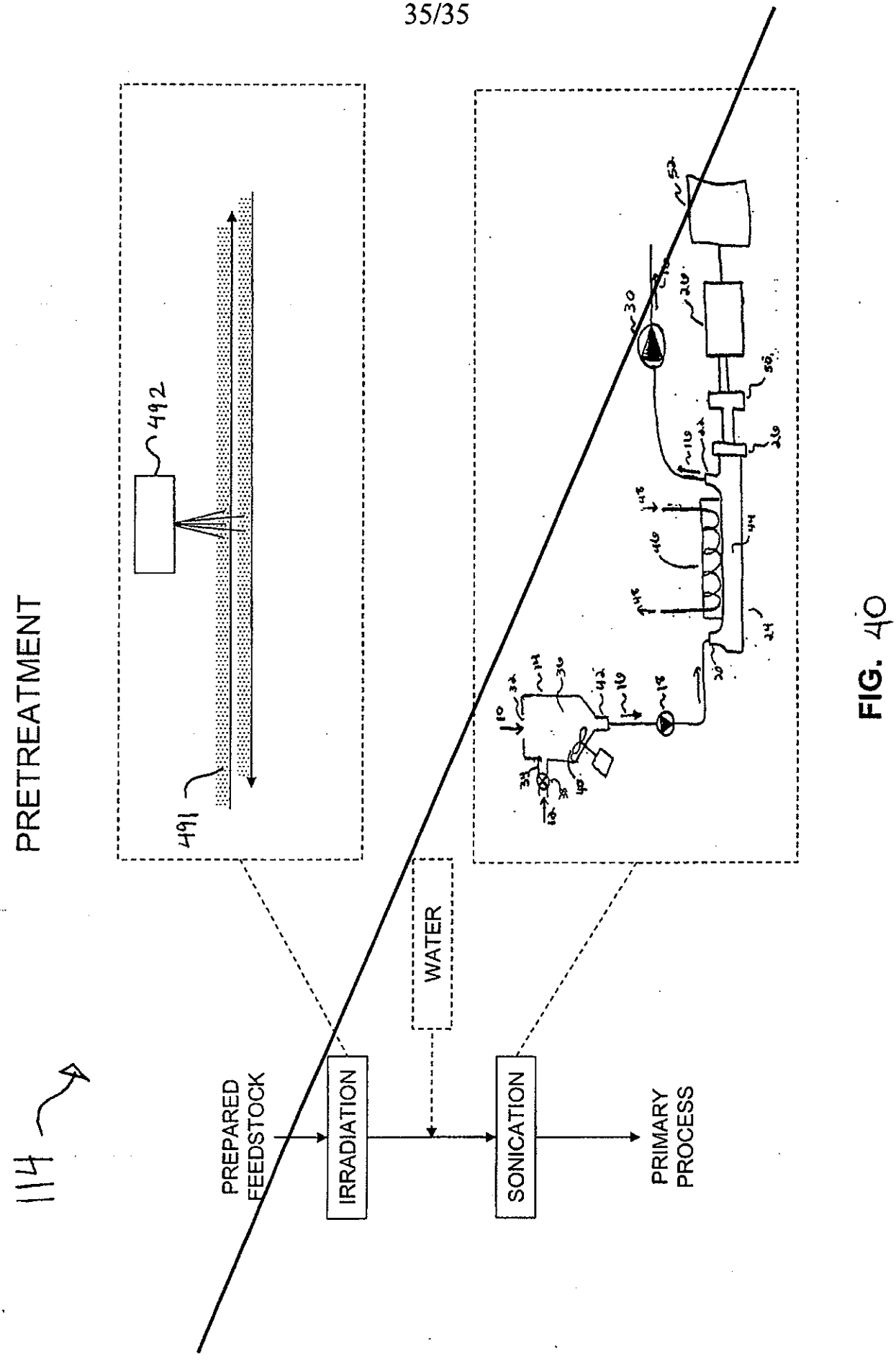
114
PREPARED FEEDSTOCK
IRRADIATION
WATER
SONICATION
PRIMARY PROCESS
PRETREATMENT
491
492

FIG. 40

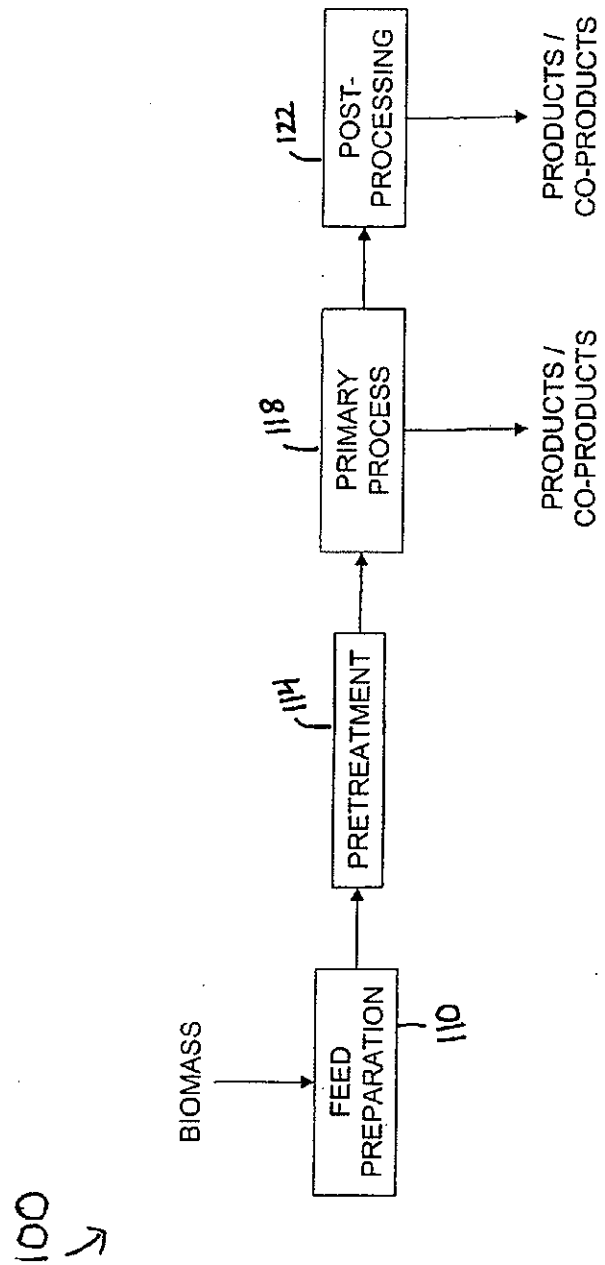
100
BIOMASS
FEED PREPARATION
110
PRETREATMENT
114
PRIMARY PROCESS
118
PRODUCTS / CO-PRODUCTS
POST-PROCESSING
122
PRODUCTS / CO-PRODUCTS

FIG. 1

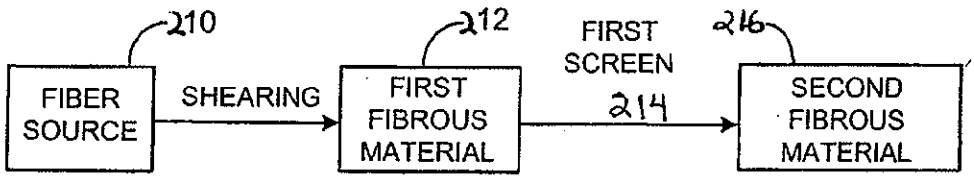
210
212
FIRST
SCREEN
216
FIBER
SOURCE
SHEARING
FIRST
FIBROUS
MATERIAL
214
SECOND
FIBROUS
MATERIAL

FIG. 2

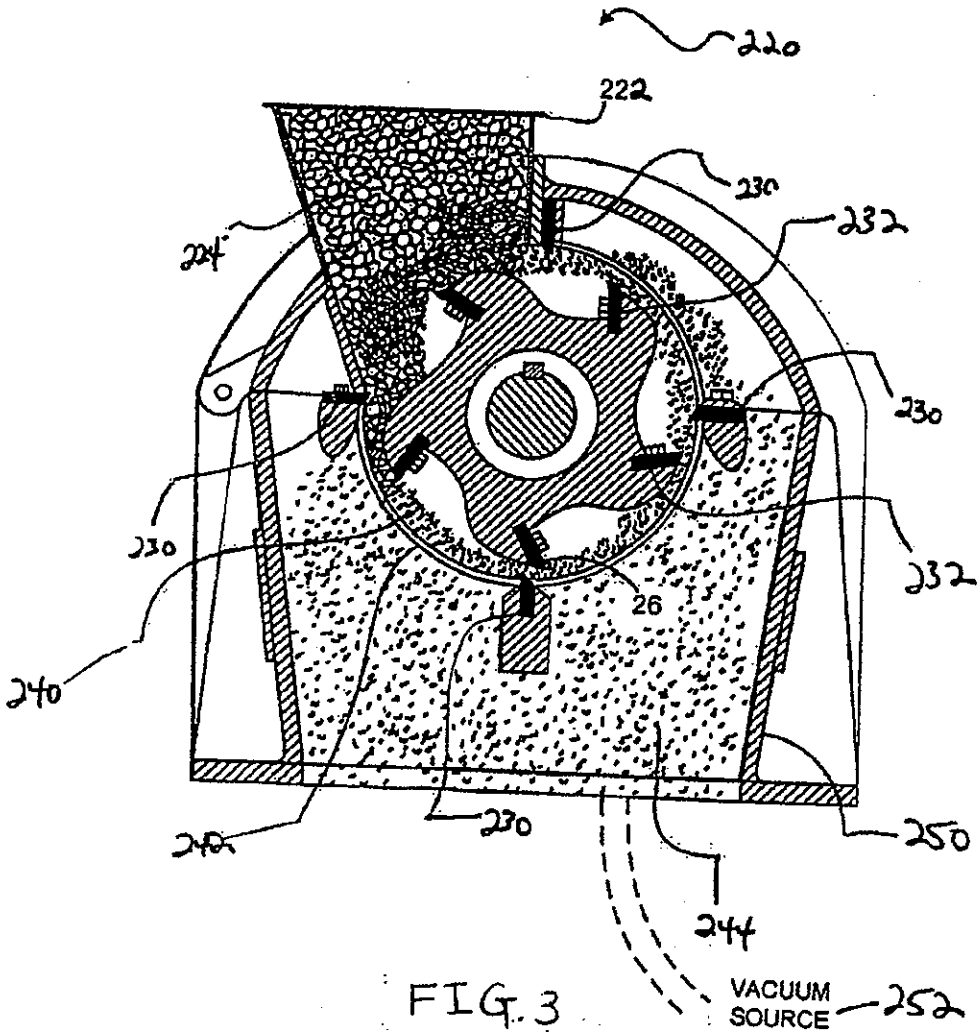
220
222
230
232
224
230
232
230
26
240
230
250
244
VACUUM SOURCE
252

FIG. 3

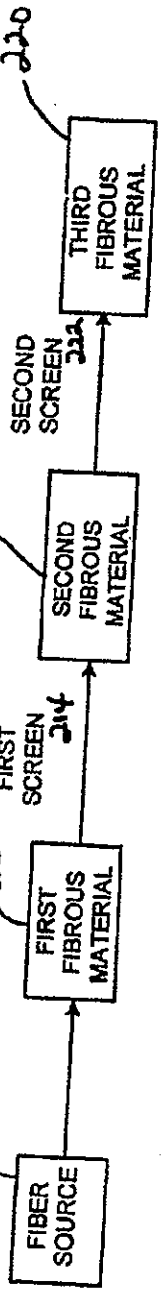
210
THIRD FIBROUS MATERIAL
SECOND SCREEN 220
216
SECOND FIBROUS MATERIAL
FIRST SCREEN 214
212
FIRST FIBROUS MATERIAL
210
FIBER SOURCE

FIG. 4

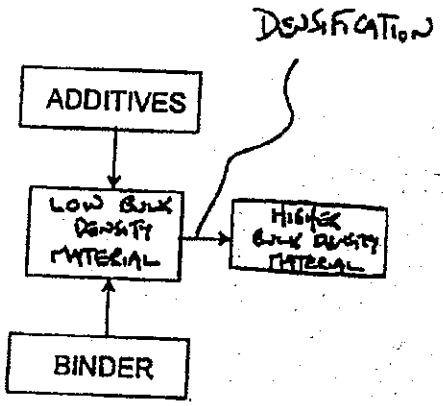
DENSIFICATION
ADDITIVES
LOW BULK DENSITY MATERIAL
HIGHER BULK DENSITY MATERIAL
BINDER

FIG. 5

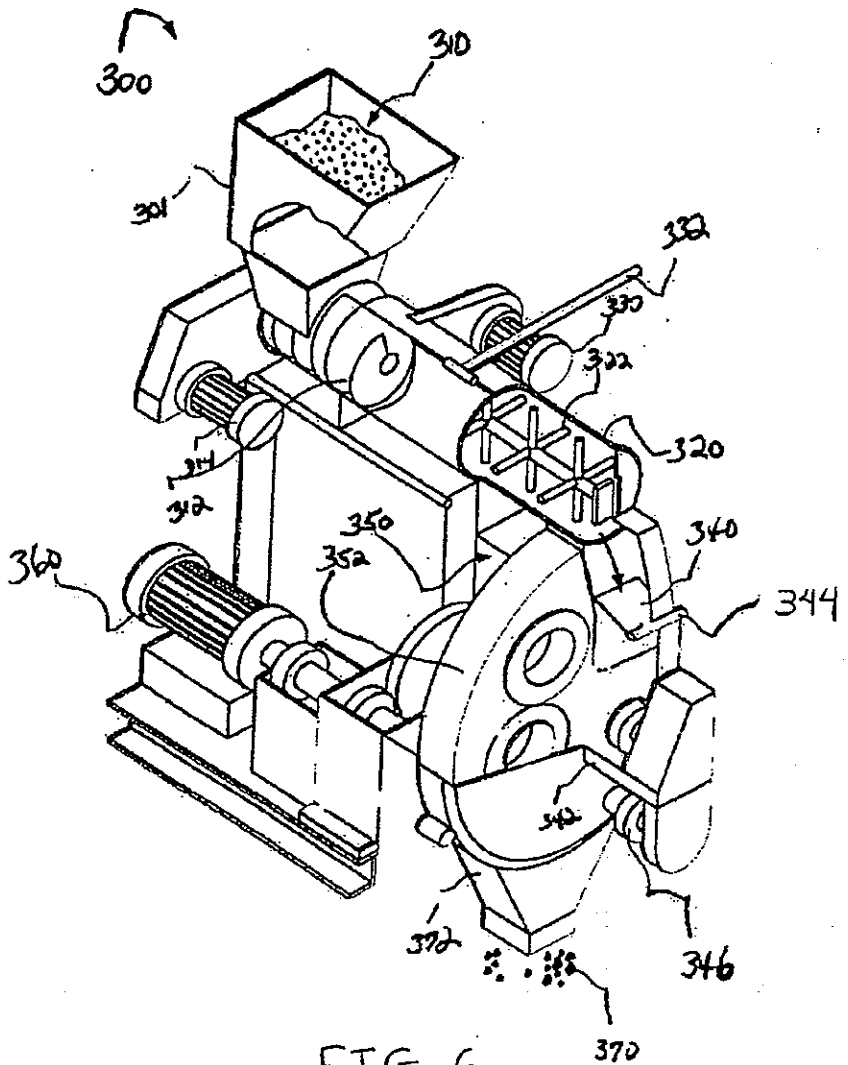
300
310
301
332
330
322
320
314
312
350
352
360
340
344
342
372
346
370

FIG. 6

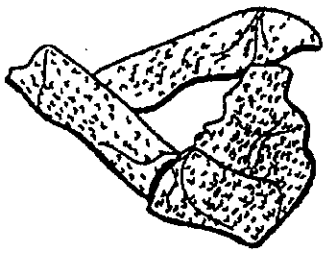

FIG. 7A

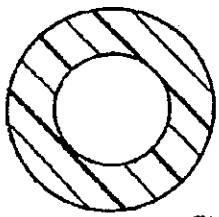

FIG. 7B

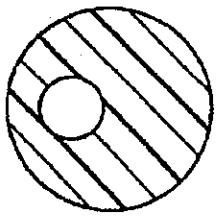

FIG. 7C

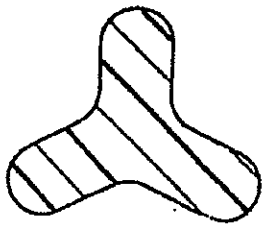

FIG. 7D

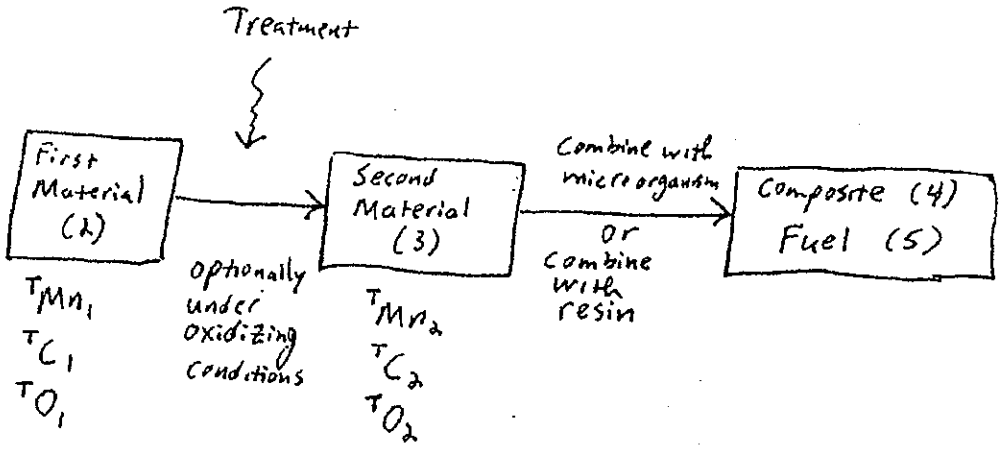
Treatment
First Material (2)
Second Material (3)
Combine with microorganism
Composite (4) Fuel (5)
optionally under oxidizing conditions
or Combine with resin
T_{Mn_1}
T_{C_1}
T_{O_1}
T_{Mn_2}
T_{C_2}
T_{O_2}

FIG. 8

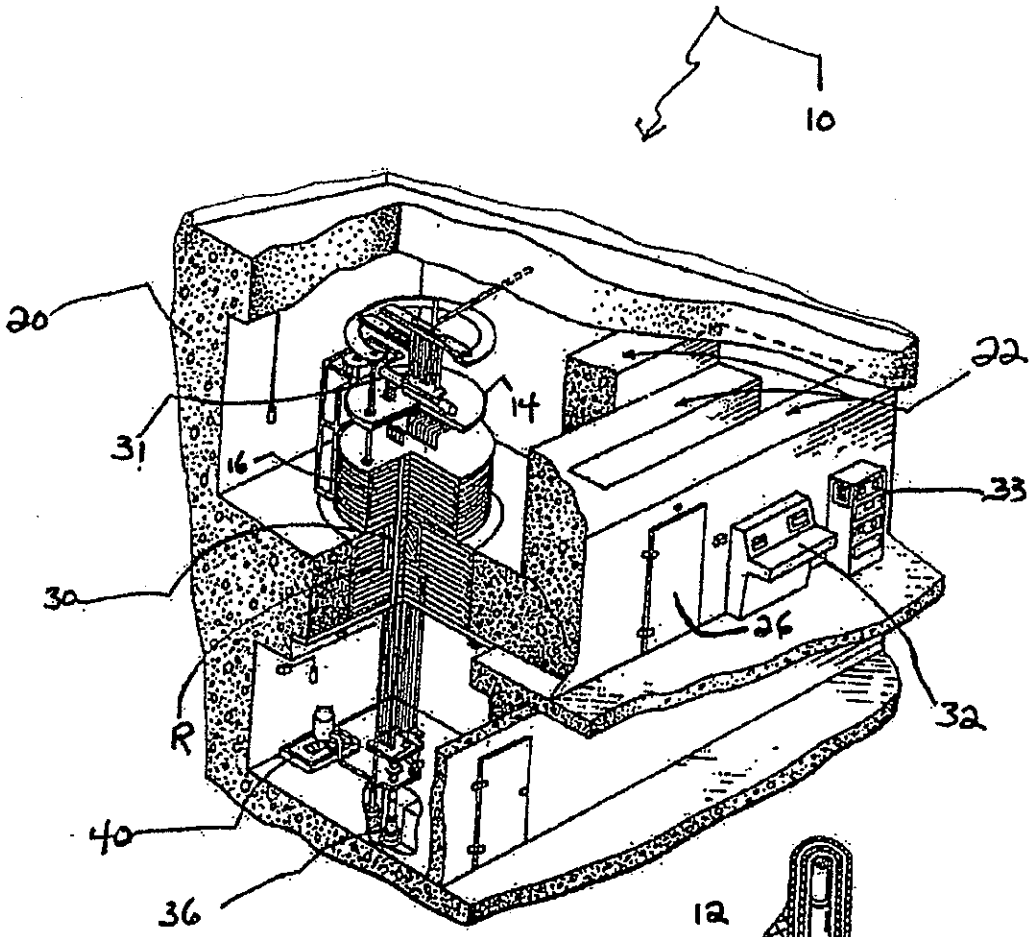

FIG. 9

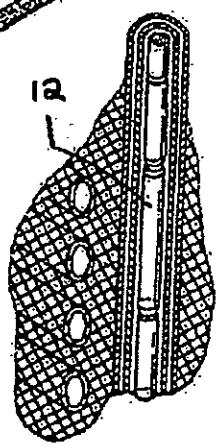

FIG. 10

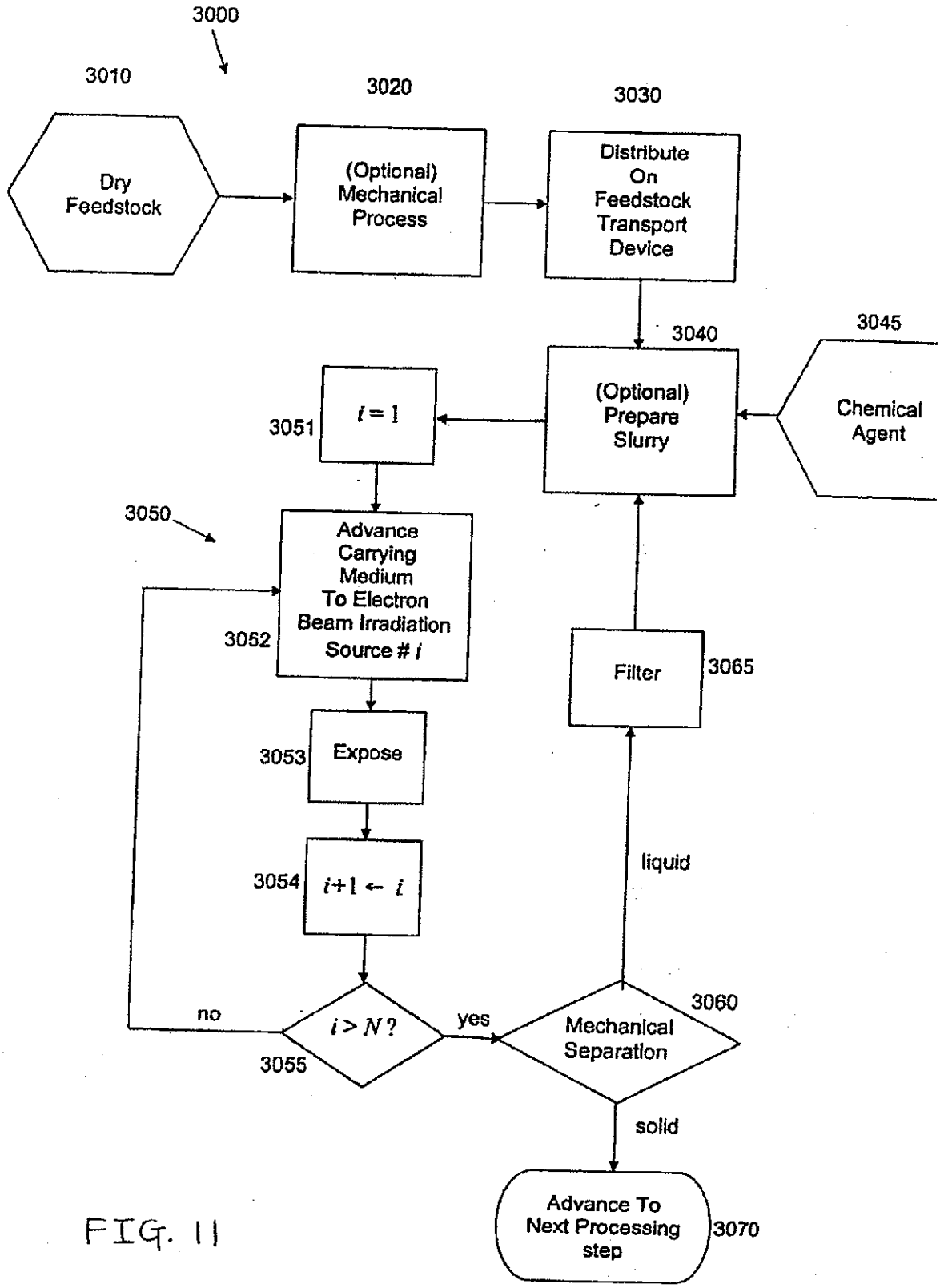
3000
3010
Dry Feedstock
3020
(Optional) Mechanical Process
3030
Distribute On Feedstock Transport Device
3040
(Optional) Prepare Slurry
3045
Chemical Agent
3051
i = 1
3050
Advance Carrying Medium To Electron Beam Irradiation Source # i
3052
3053
Expose
3054
i+1 ← i
3055
i > N ?
no
yes
3060
Mechanical Separation
liquid
Filter
3065
solid
Advance To Next Processing step
3070

FIG. 11

FIG. 12

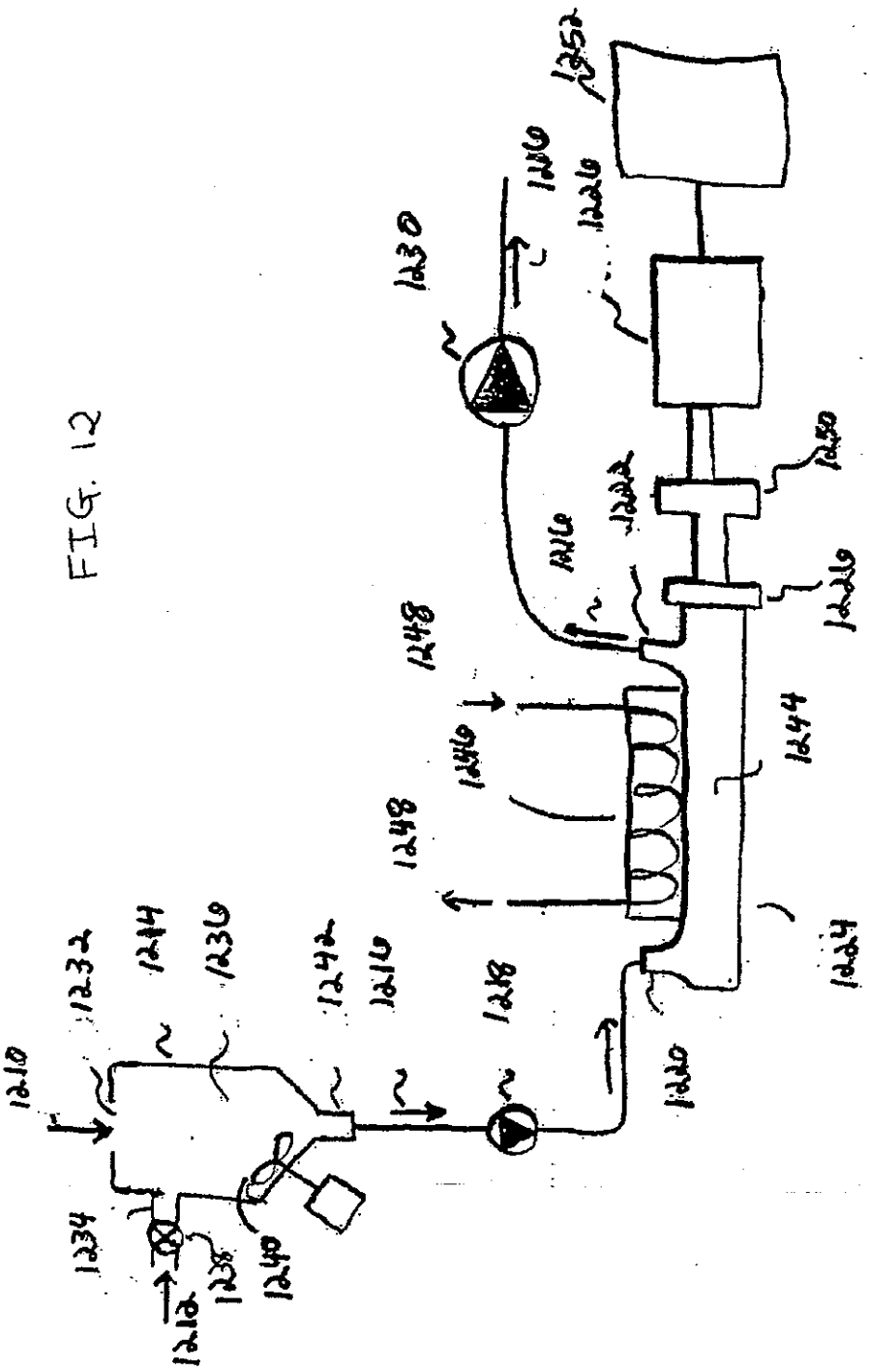
1210
1232
1234
1236
1238
1240
1242
1244
1246
1248
1250
1252
1254
1256
1258
1260
1262
1264

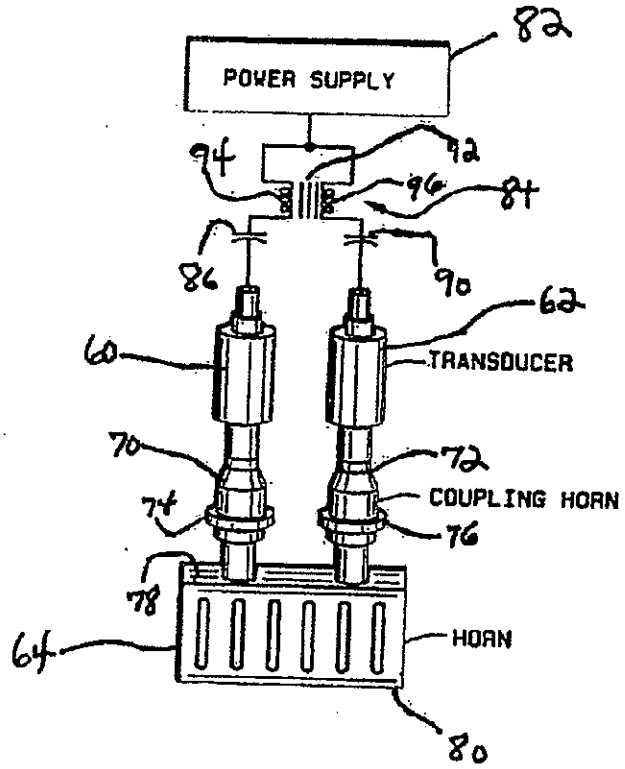
82
POWER SUPPLY
94
92
96
84
86
90
62
60
TRANSDUCER
70
72
74
COUPLING HORN
76
78
64
HORN
80

FIG 13

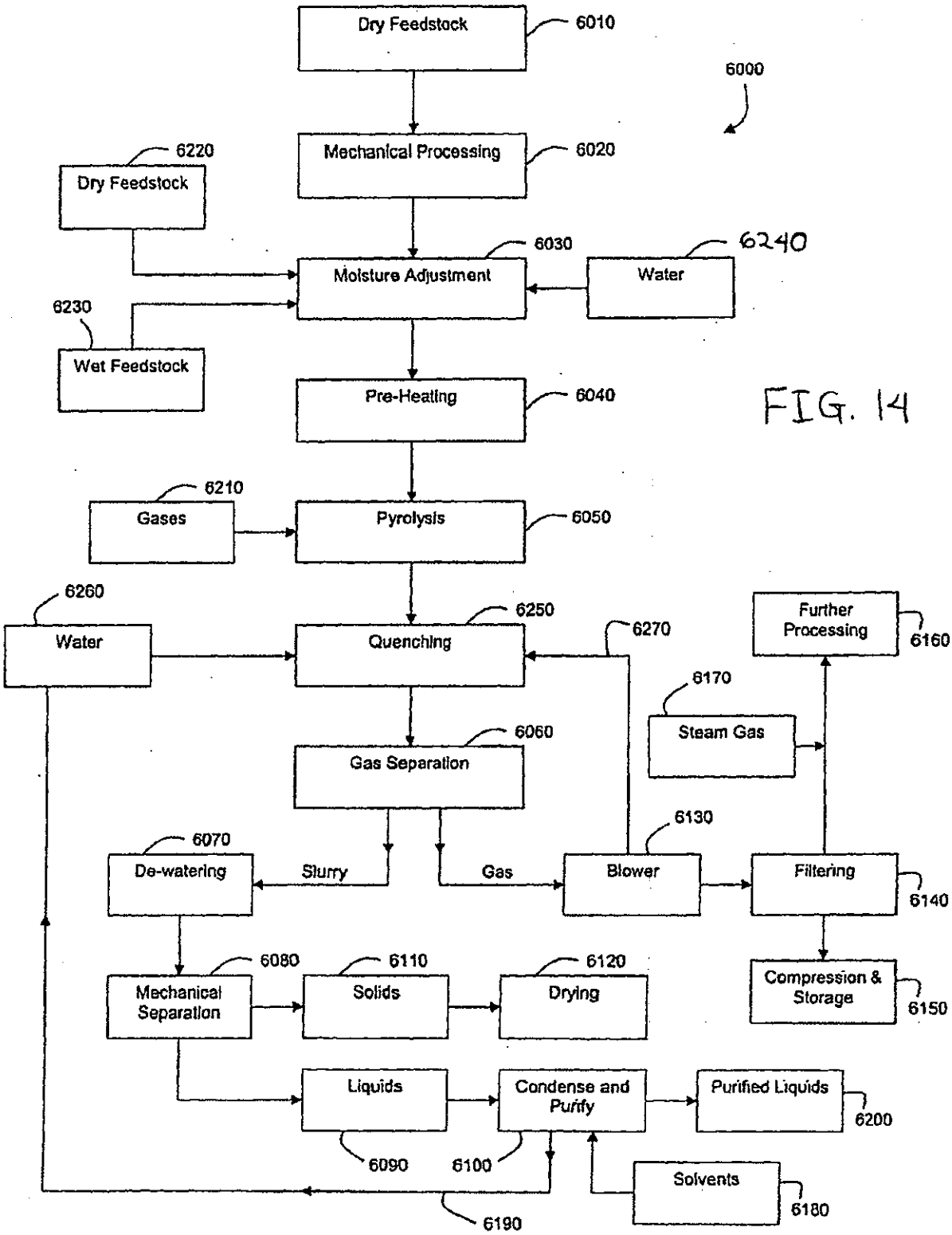
Dry Feedstock
6010
6000
Mechanical Processing
6020
6220
Dry Feedstock
6030
6240
Moisture Adjustment
Water
6230
Wet Feedstock
Pre-Heating
6040
6210
Gases
Pyrolysis
6050
6260
Water
6250
Quenching
6270
Further Processing
6160
6170
Steam Gas
6060
Gas Separation
6130
6070
De-watering
Slurry
Gas
Blower
Filtering
6140
6080
6110
6120
Mechanical Separation
Solids
Drying
Compression & Storage
6150
Liquids
Condense and Purify
Purified Liquids
6200
6090
6100
Solvents
6180
6190

FIG. 14

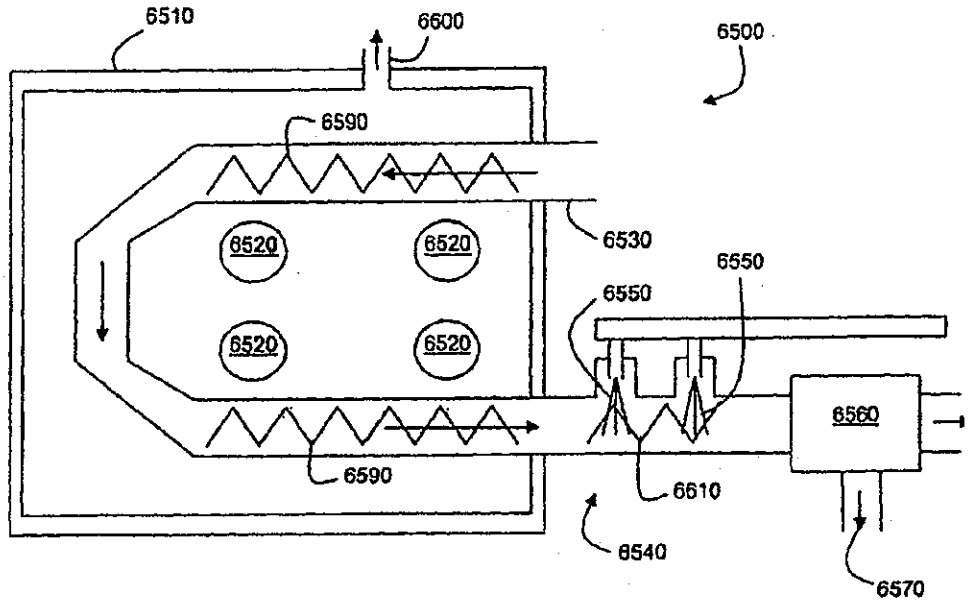
6510
6600
6500
6590
6530
6520
6520
6520
6520
6550
6550
6560
6590
6610
6540
6570

FIG. 15

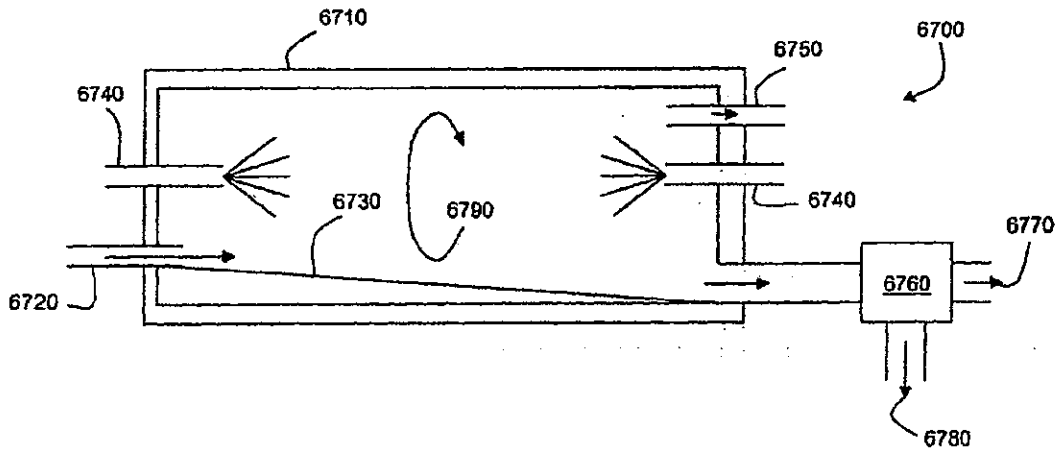
6710
6750
6700
6740
6740
6730
6790
6770
6760
6720
6780

FIG. 16

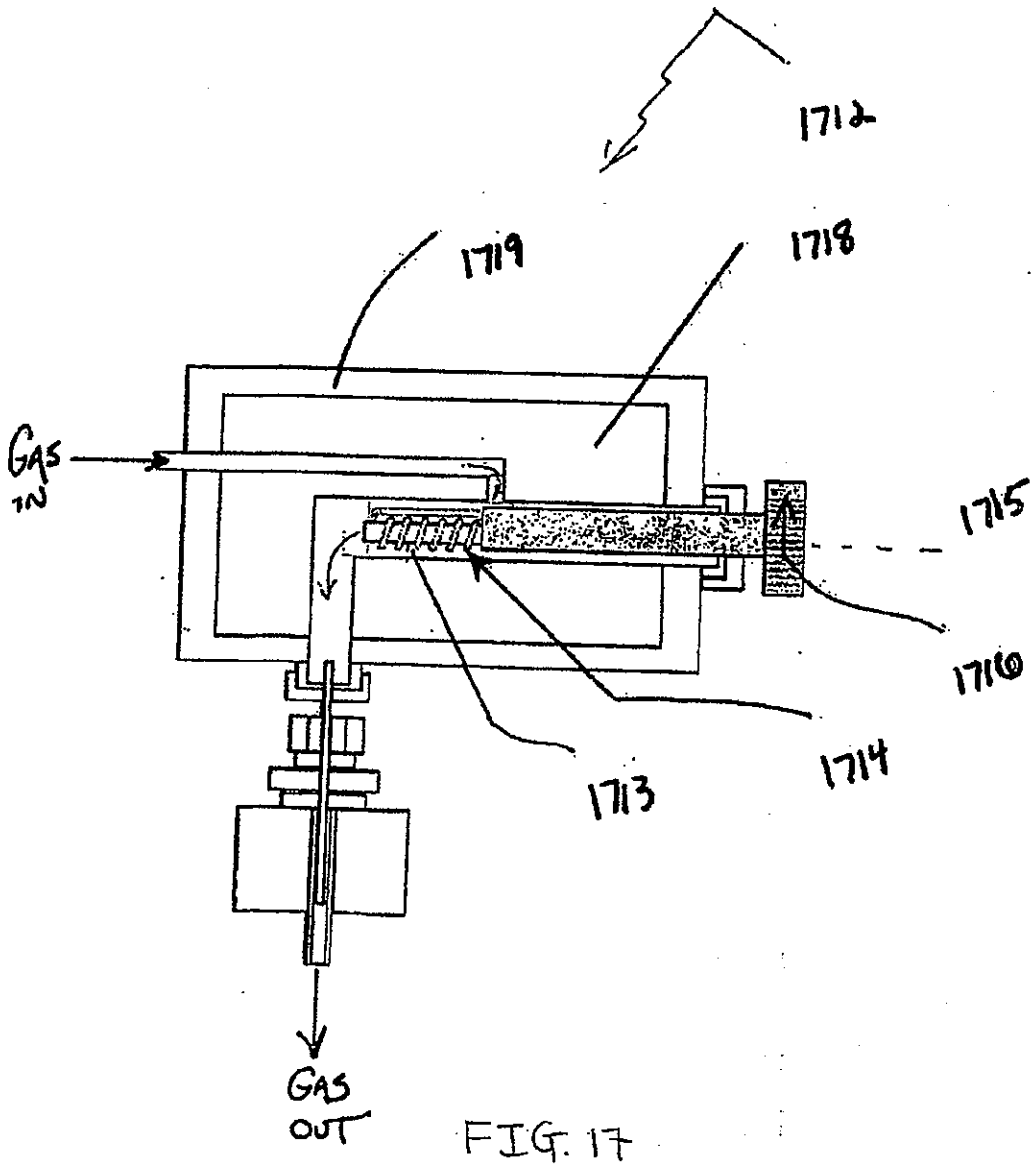

FIG. 17

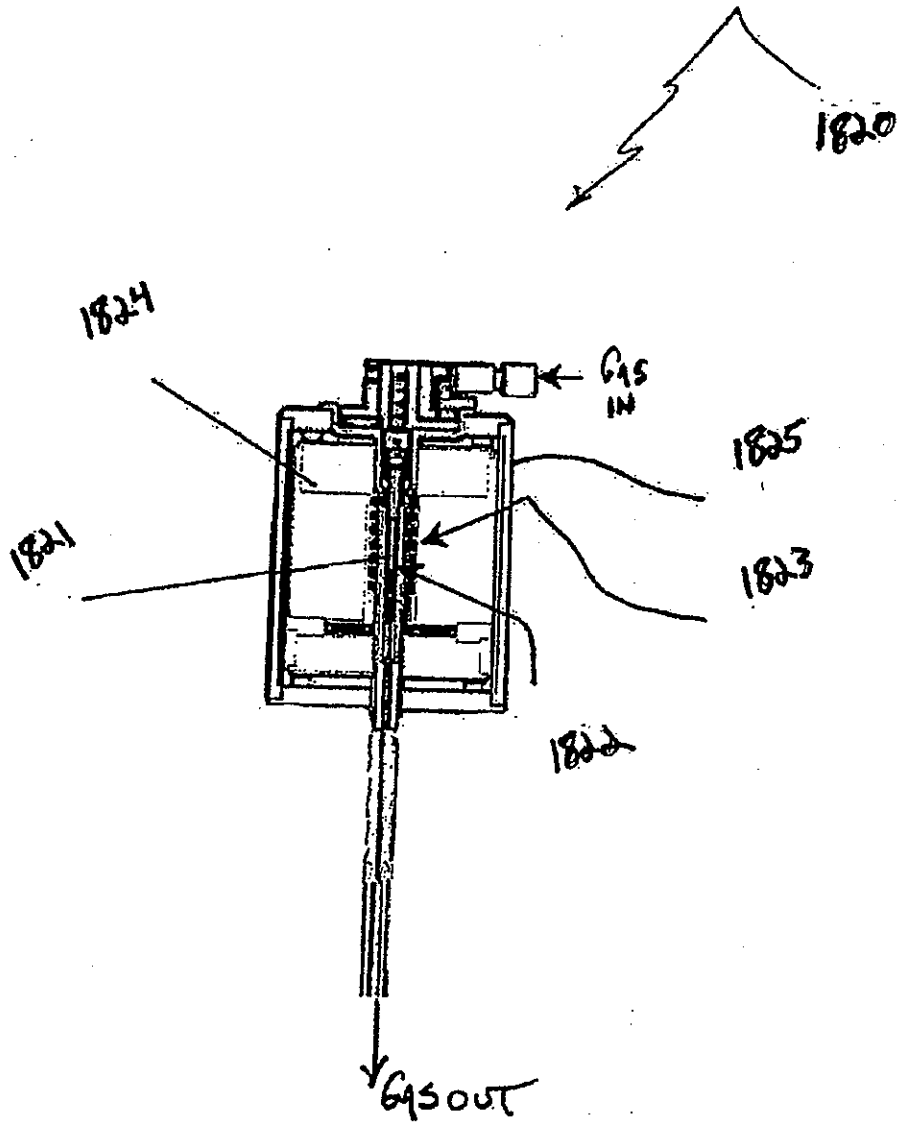

FIG. 18

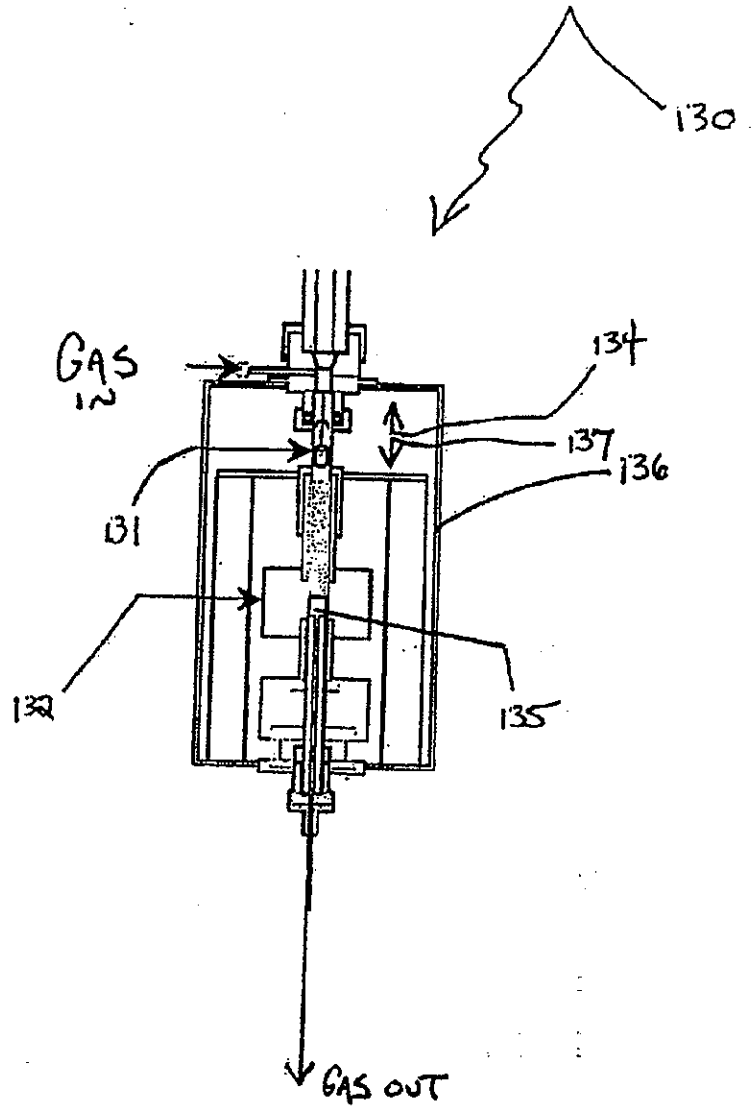

FIG. 19

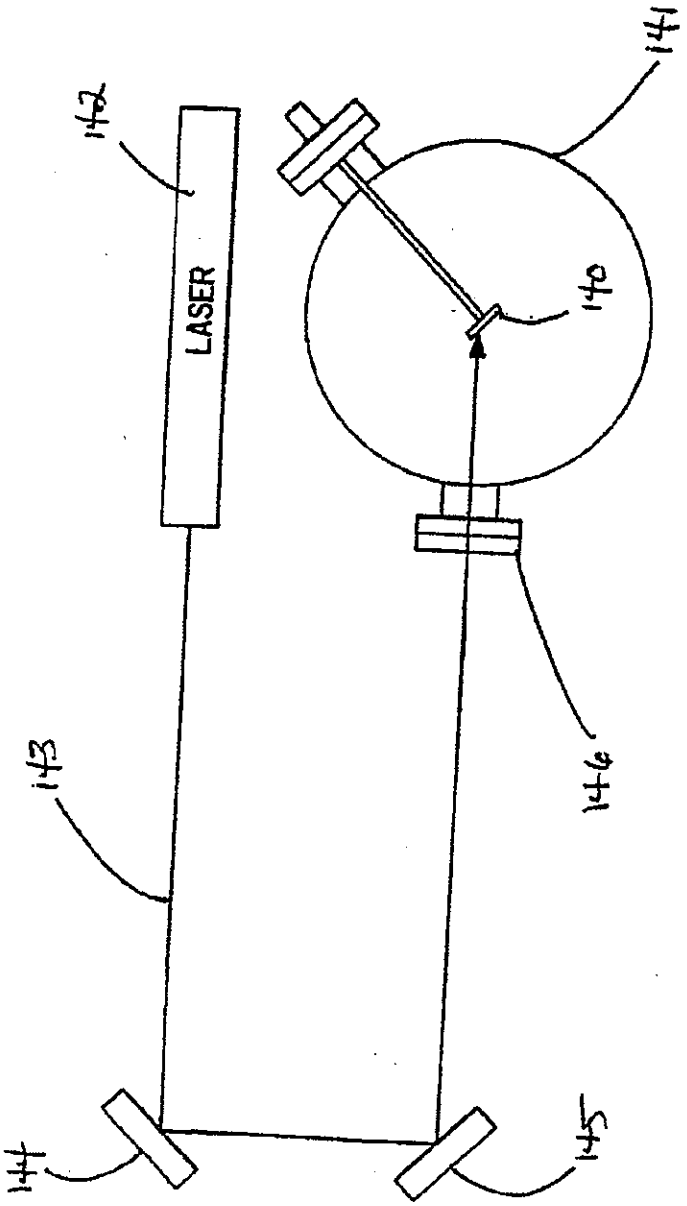

FIG. 20

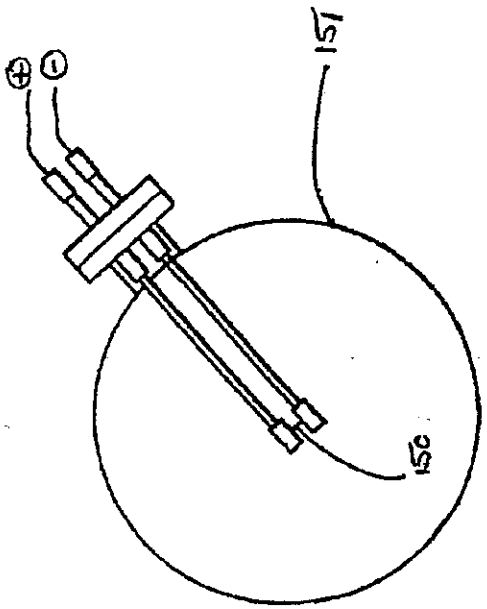

FIG. 21

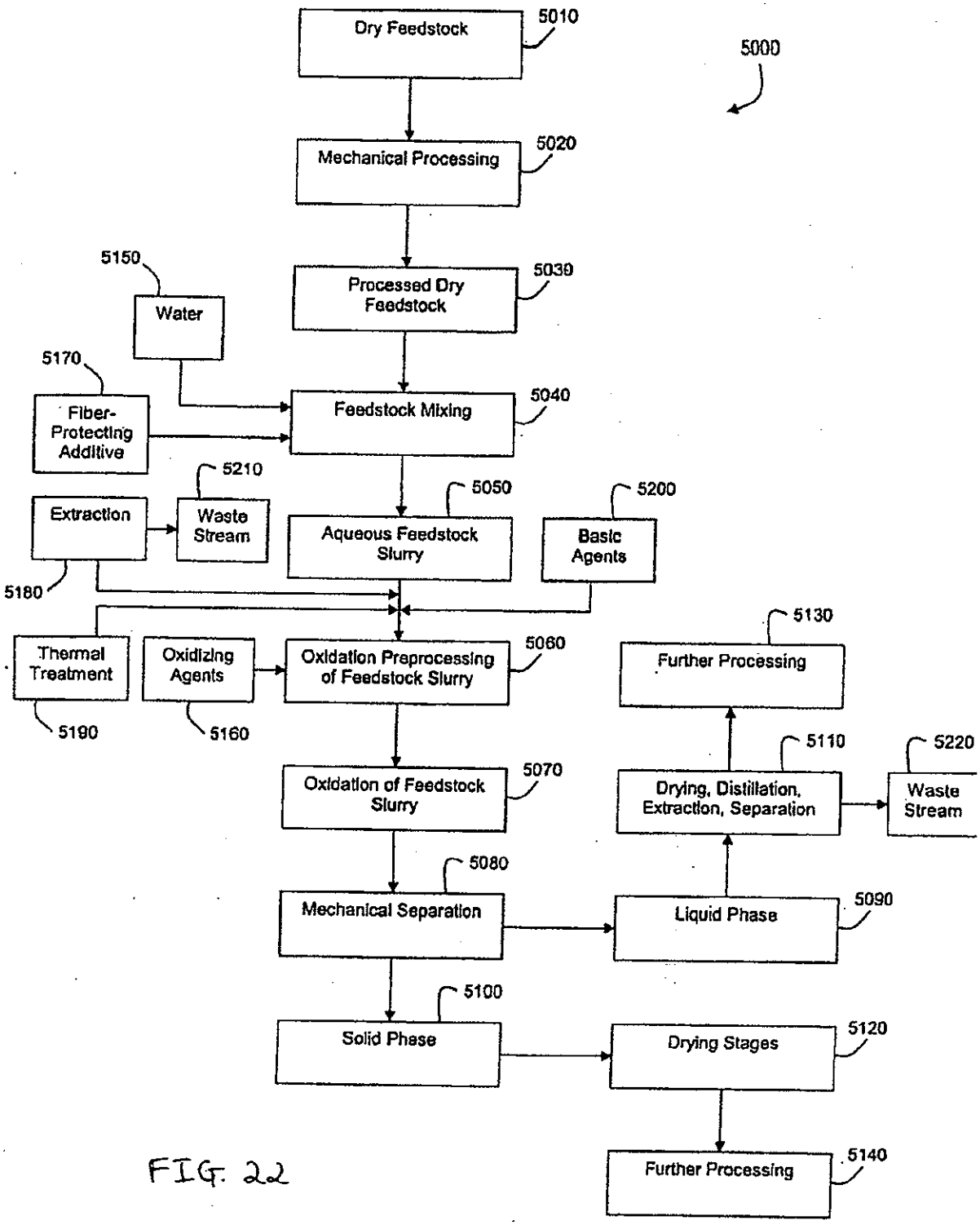
Dry Feedstock
5010
5000
Mechanical Processing
5020
5150
Water
Processed Dry Feedstock
5039
5170
Fiber-Protecting Additive
Feedstock Mixing
5040
5210
Extraction
Waste Stream
5050
Aqueous Feedstock Slurry
5200
Basic Agents
5180
Thermal Treatment
Oxidizing Agents
Oxidation Preprocessing of Feedstock Slurry
5060
5130
Further Processing
5190
5160
5110
5220
Oxidation of Feedstock Slurry
5070
Drying, Distillation, Extraction, Separation
Waste Stream
5080
Mechanical Separation
Liquid Phase
5090
5100
Solid Phase
Drying Stages
5120
Further Processing
5140

FIG. 22

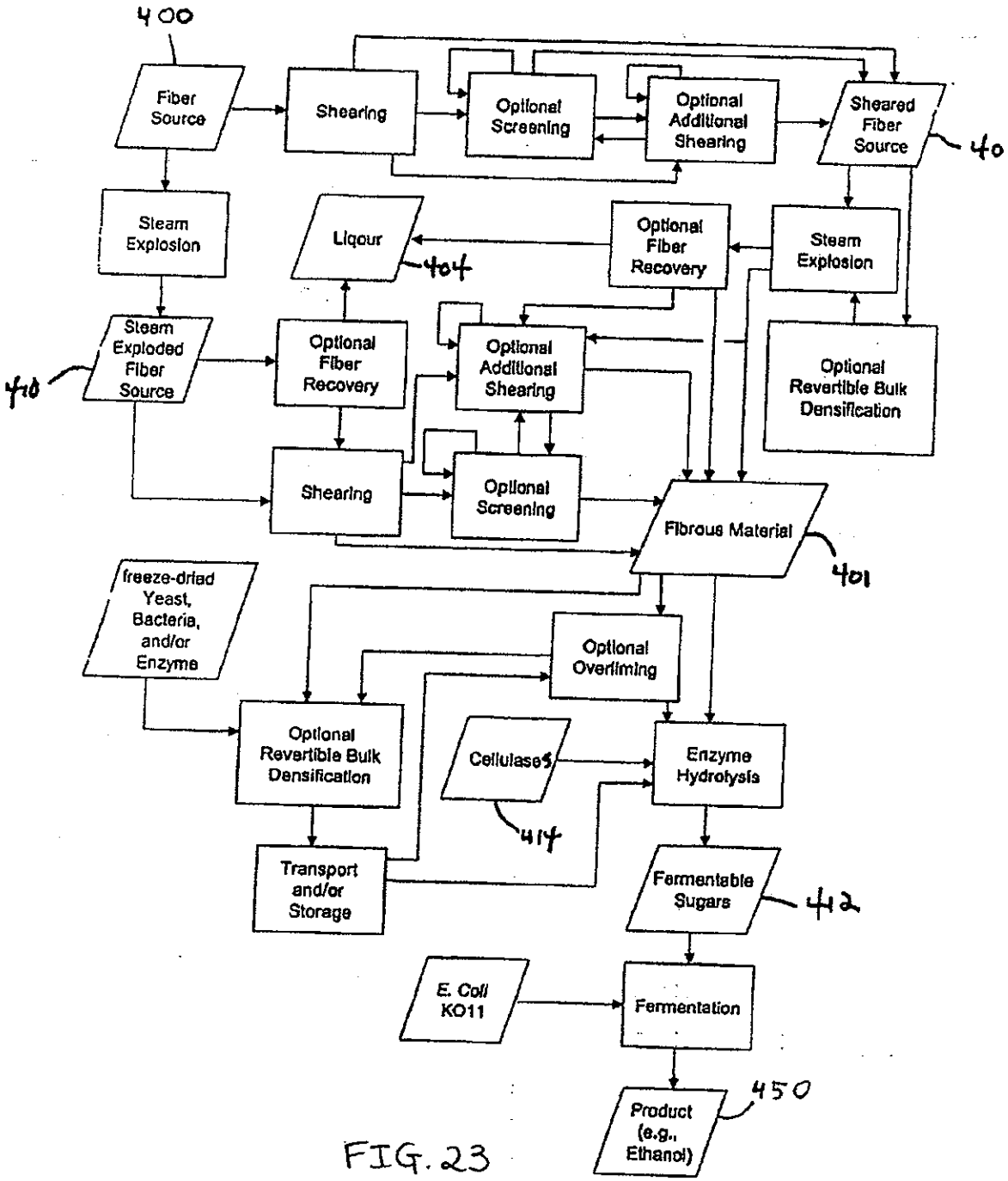
400
Fiber Source
Shearing
Optional Screening
Optional Additional Shearing
Sheared Fiber Source
40
Steam Explosion
Liquor
404
Optional Fiber Recovery
Steam Explosion
Steam Exploded Fiber Source
410
Optional Fiber Recovery
Optional Additional Shearing
Optional Revertible Bulk Densification
Shearing
Optional Screening
Fibrous Material
401
freeze-dried Yeast, Bacteria, and/or Enzyme
Optional Overliming
Optional Revertible Bulk Densification
Cellulases
414
Enzyme Hydrolysis
Transport and/or Storage
Fermentable Sugars
412
E. Coli KO11
Fermentation
Product (e.g., Ethanol)
450

FIG. 23

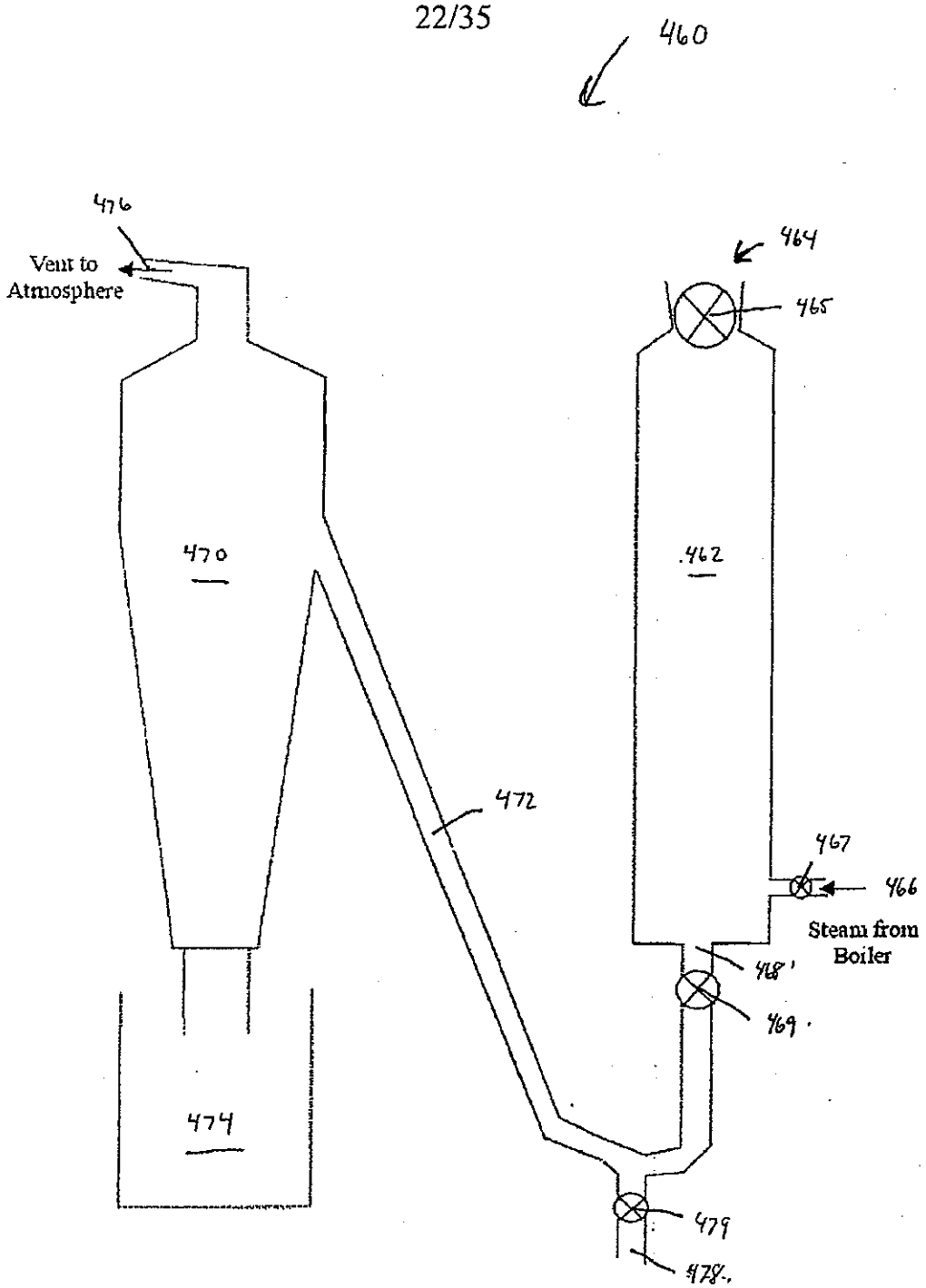
460
476
Vent to Atmosphere
464
465
470
462
472
467
466
Steam from Boiler
468
469
474
479
478

FIG 24

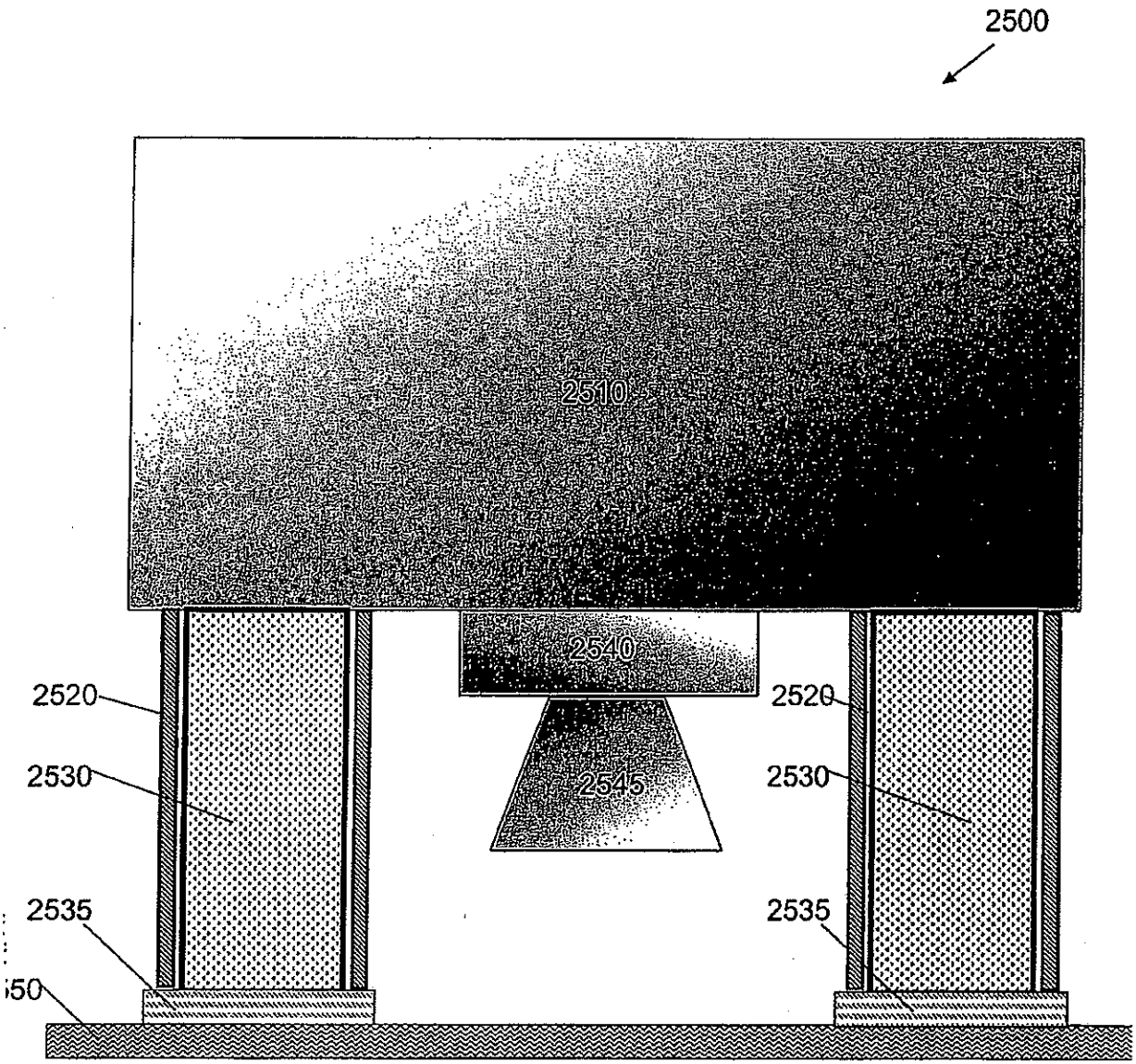

FIG. 25

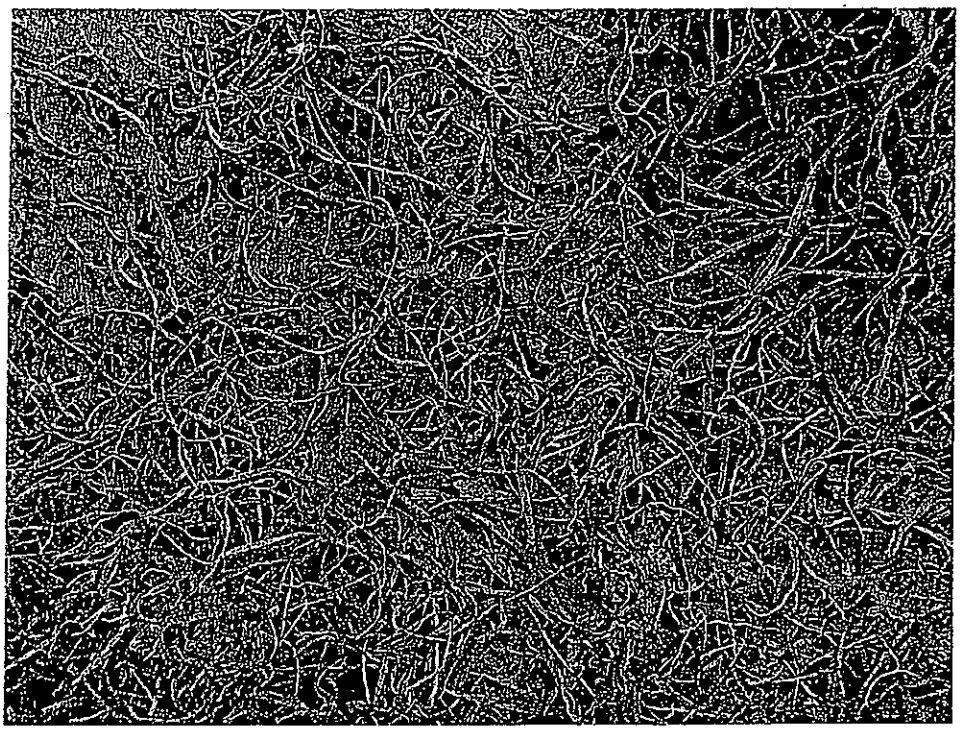

FIG. 26

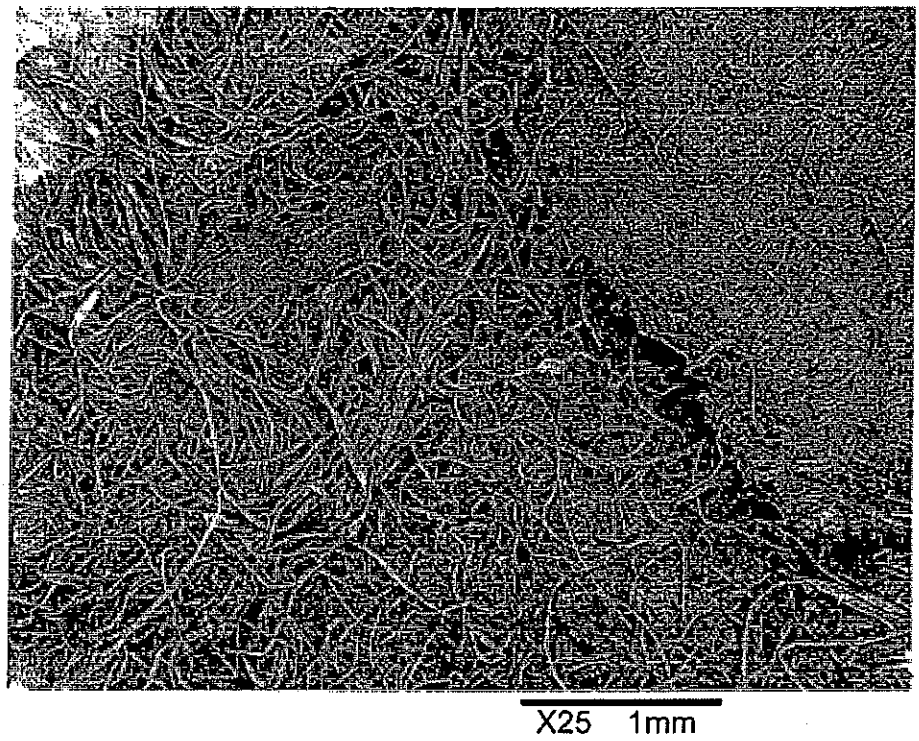

FIG. 27

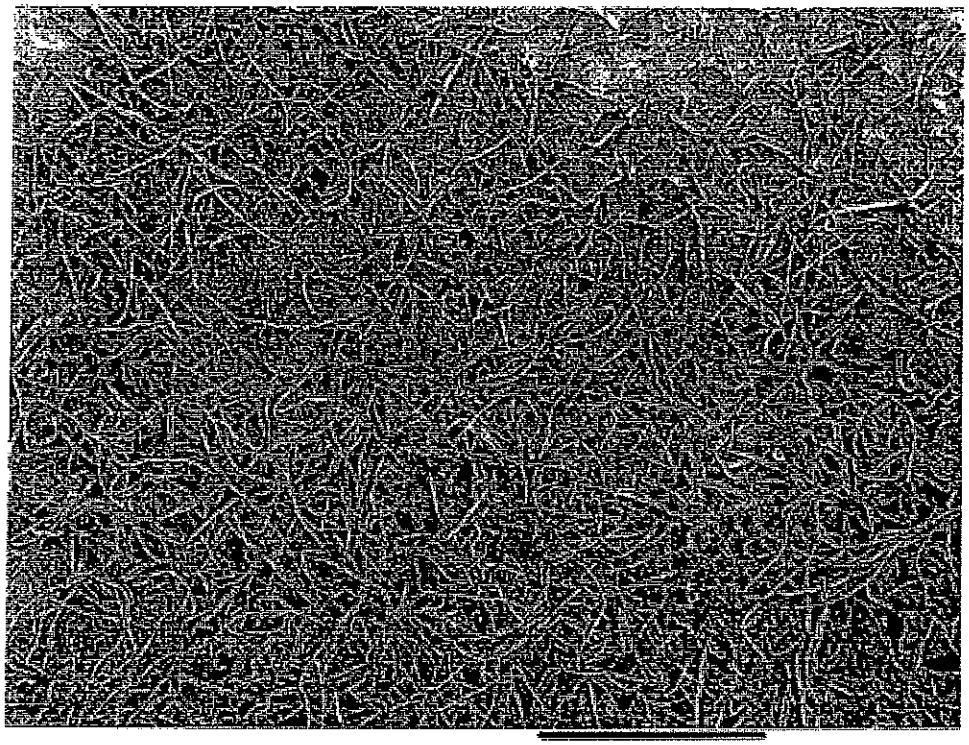

FIG. 28

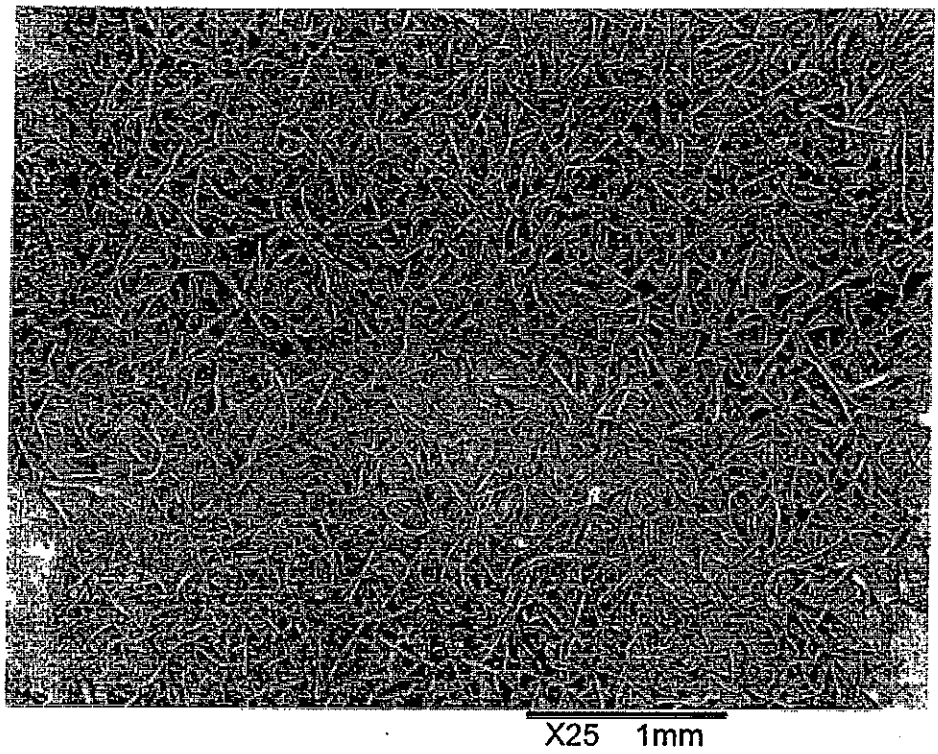

FIG. 29

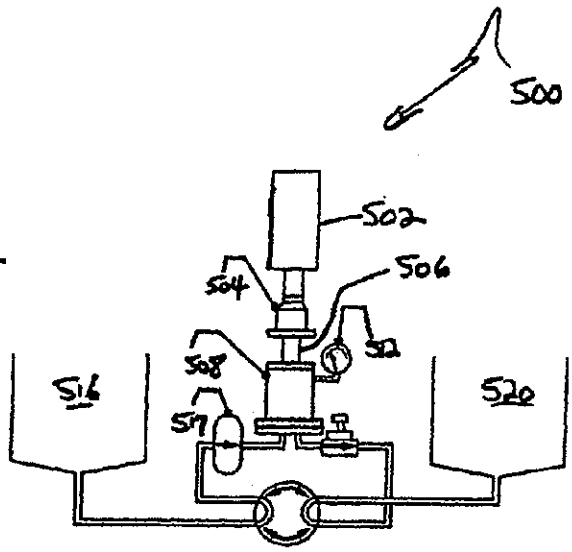

FIG. 30

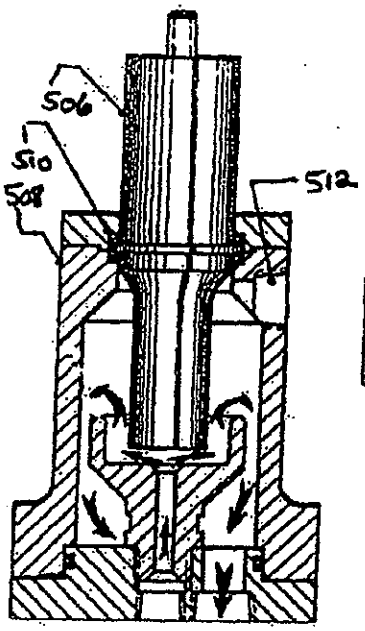

FIG. 31

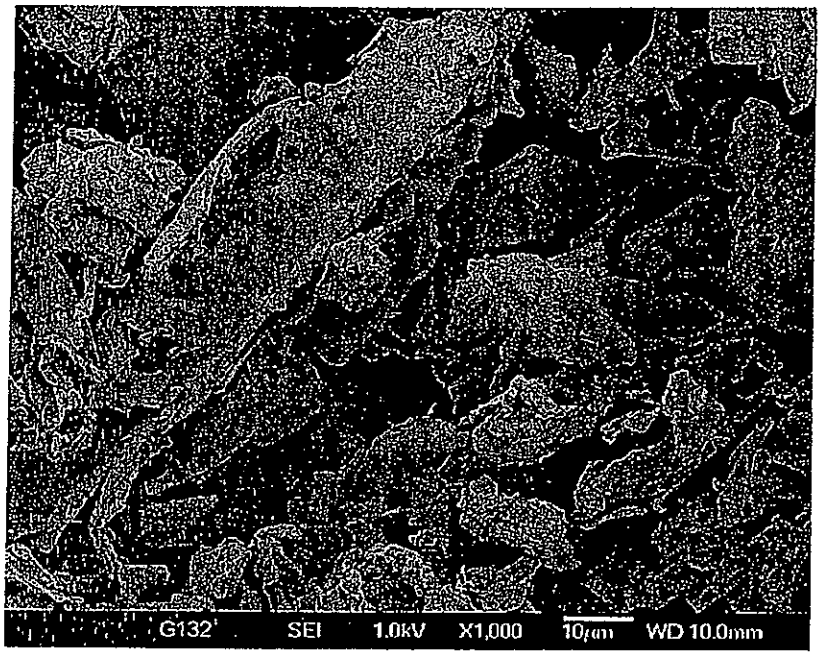
G132 SEI 1.0kV X1,000 10μm WD 10.0mm

FIG. 32

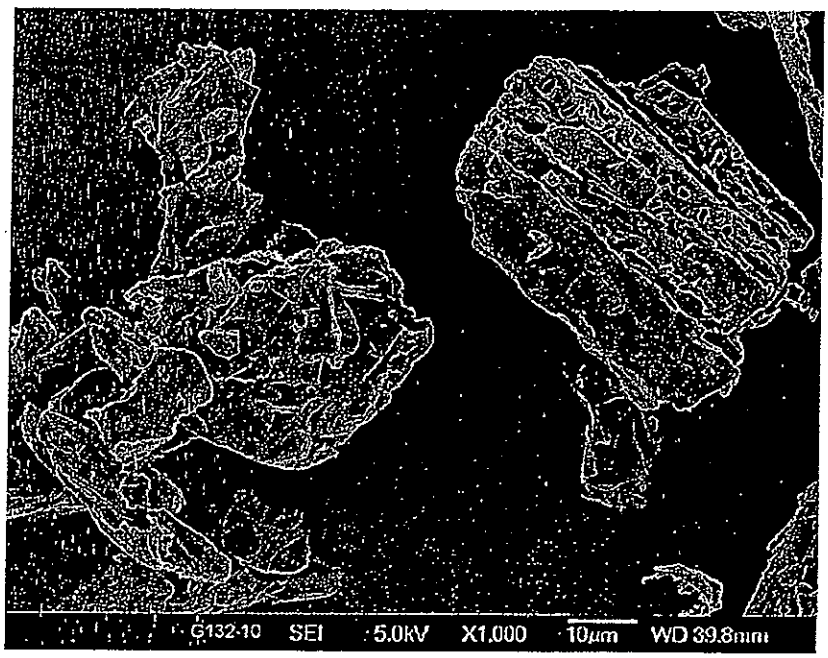
G132-10 SEI 5.0kV X1,000 10μm WD 39.8mm

FIG. 33

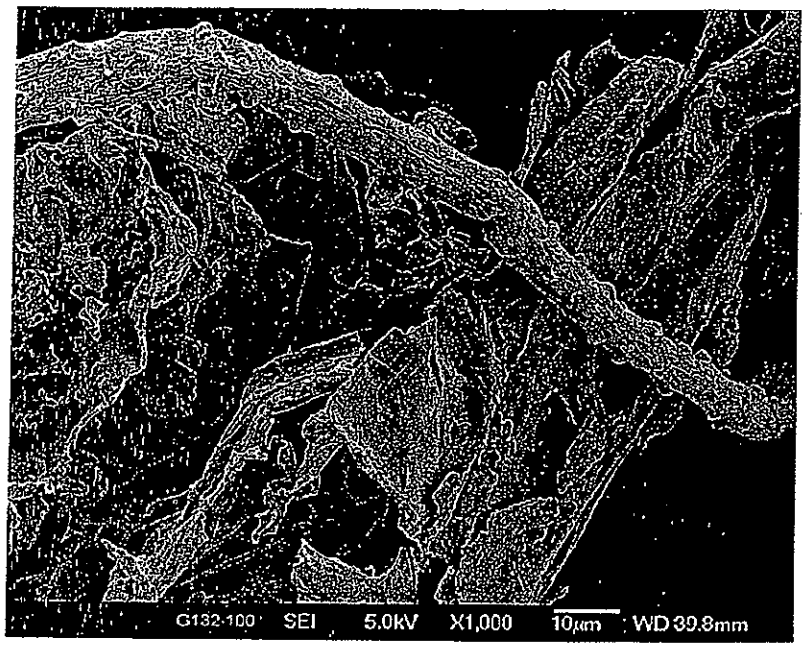
G132-100 SEI 5.0kV X1,000 10μm WD 39.8mm

FIG. 34

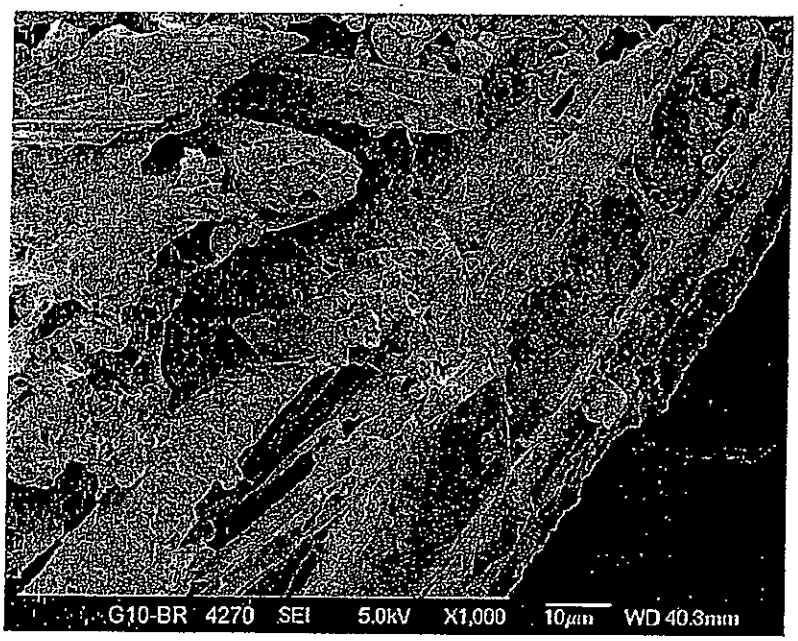
G10-BR 4270 SEI 5.0kV X1,000 10μm WD 40.3mm

FIG. 35

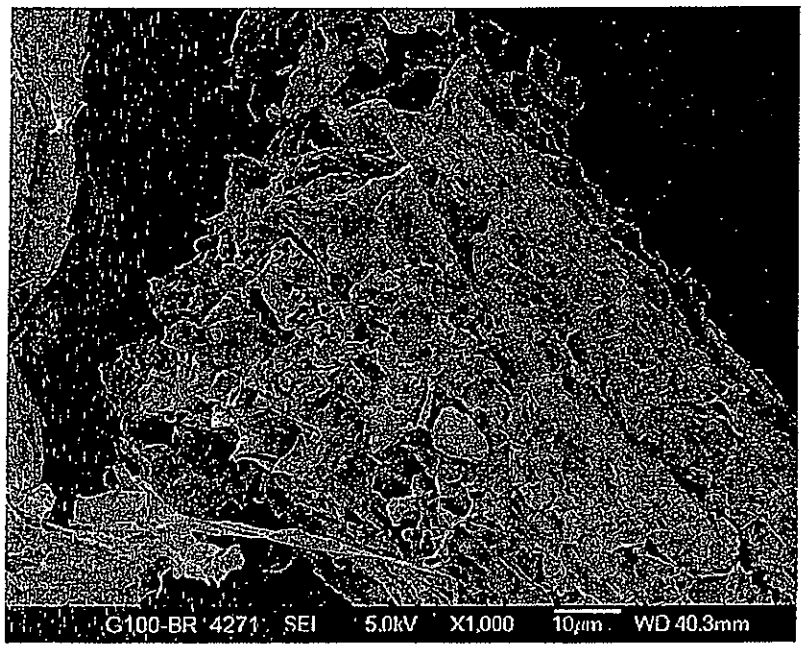

FIG. 36

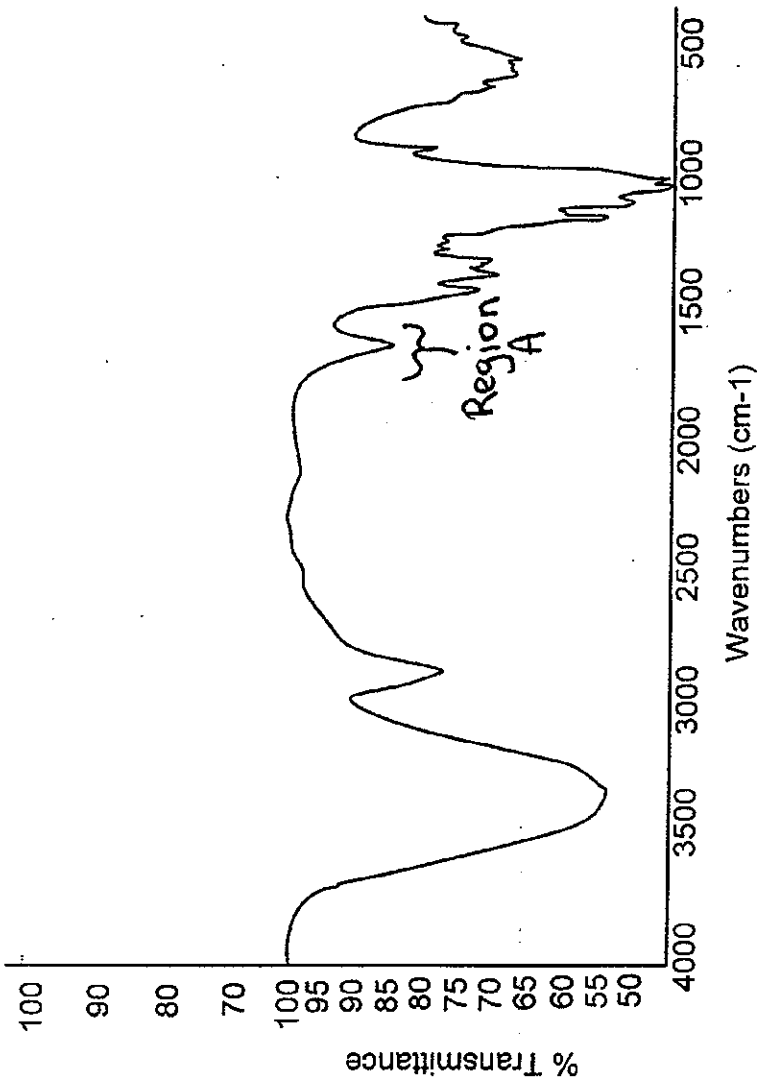
% Transmittance
100
90
80
70
100
95
90
85
80
75
70
65
60
55
50
4000
3500
3000
2500
2000
1500
1000
500
Wavenumbers (cm-1)
Region A

FIG. 37

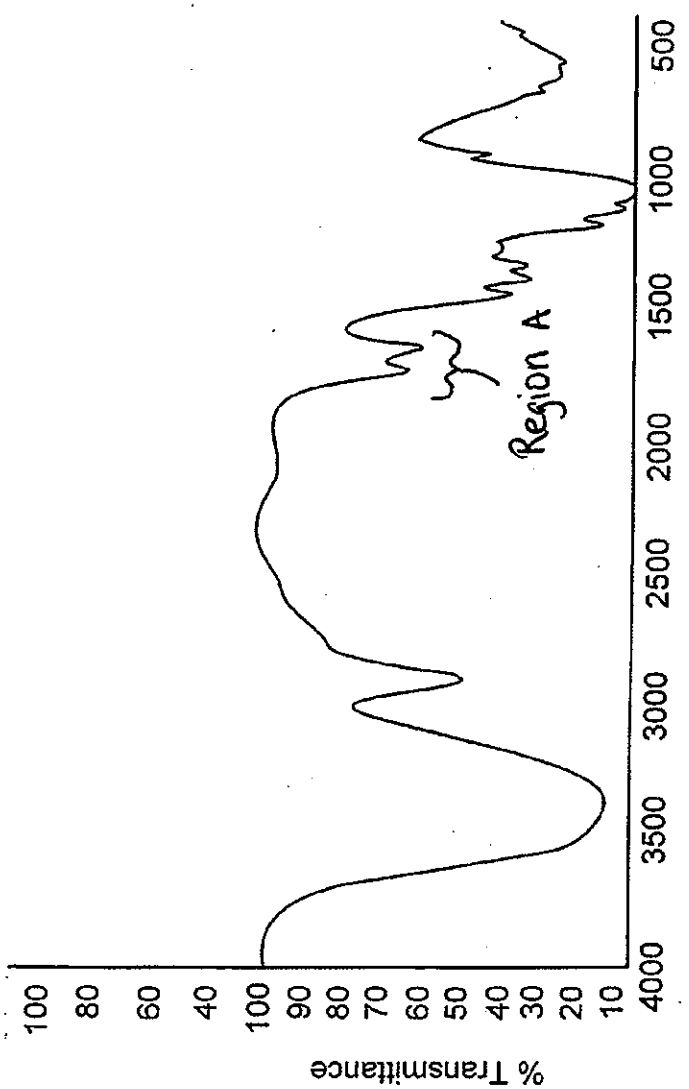
% Transmittance
100
80
60
40
100
90
80
70
60
50
40
30
20
10
4000
3500
3000
2500
2000
1500
1000
500
Wavenumbers (cm-1)
Region A

FIG. 38

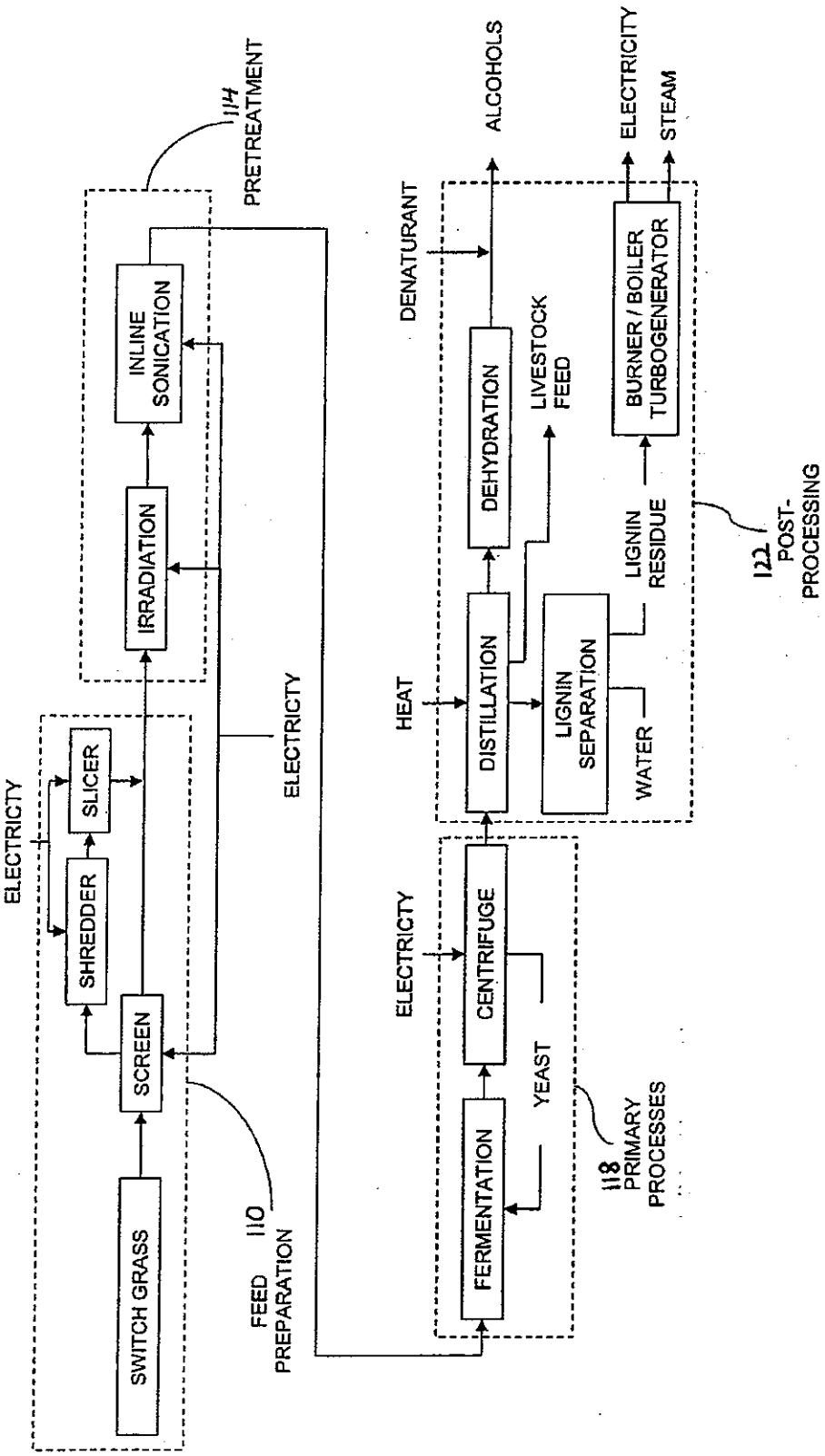
SWITCH GRASS
SCREEN
SHREDDER
SLICER
ELECTRICTY
IRRADIATION
INLINE SONICATION
1114 PRETREATMENT
ELECTRICTY
110 FEED PREPARATION
FERMENTATION
CENTRIFUGE
YEAST
ELECTRICTY
118 PRIMARY PROCESSES
HEAT
DISTILLATION
LIGNIN SEPARATION
WATER
DEHYDRATION
DENATURANT
ALCOHOLS
LIVESTOCK FEED
LIGNIN RESIDUE
BURNER / BOILER TURBOGENERATOR
ELECTRICITY
STEAM
122 POST-PROCESSING

FIG. 39

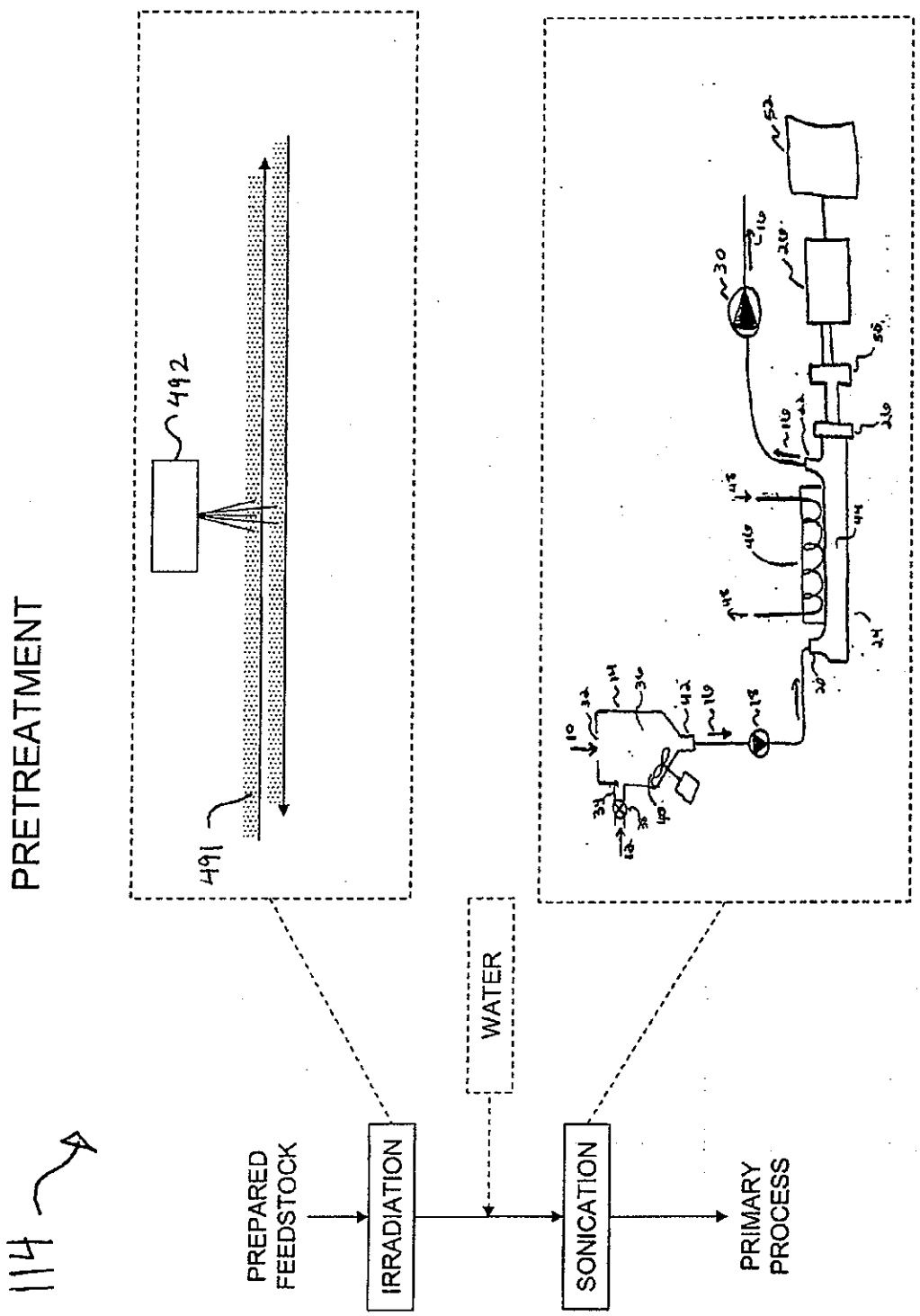
114
PRETREATMENT
491
492
PREPARED FEEDSTOCK
IRRADIATION
WATER
SONICATION
PRIMARY PROCESS

FIG. 40