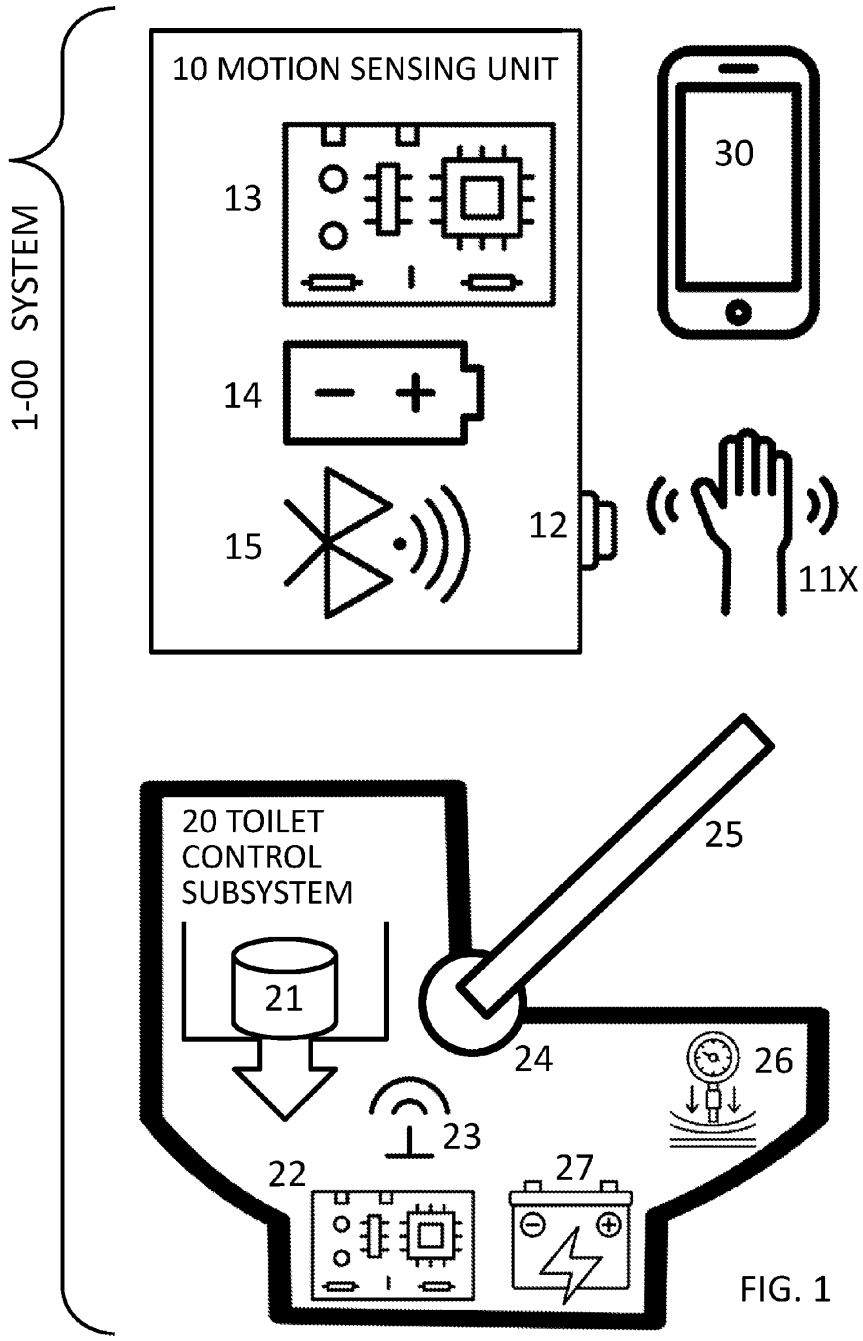
1-00 SYSTEM
10 MOTION SENSING UNIT
13
14
15
12
30
11X
20 TOILET CONTROL SUBSYSTEM
21
22
23
24
25
26
27

FIG. 1

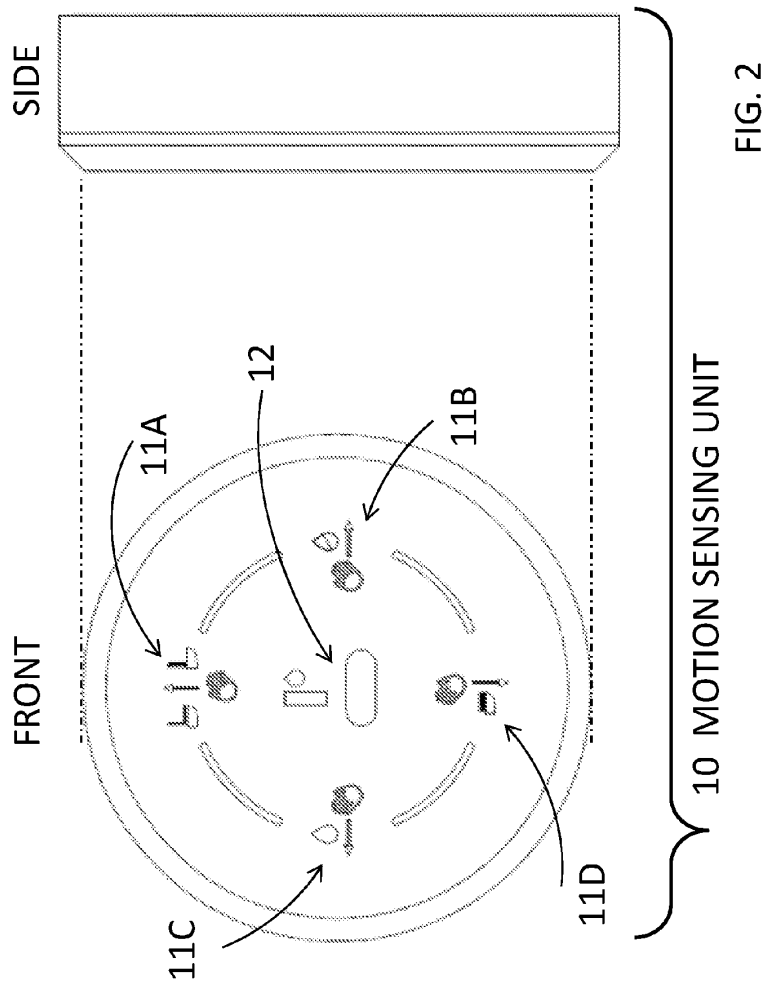

FIG. 2

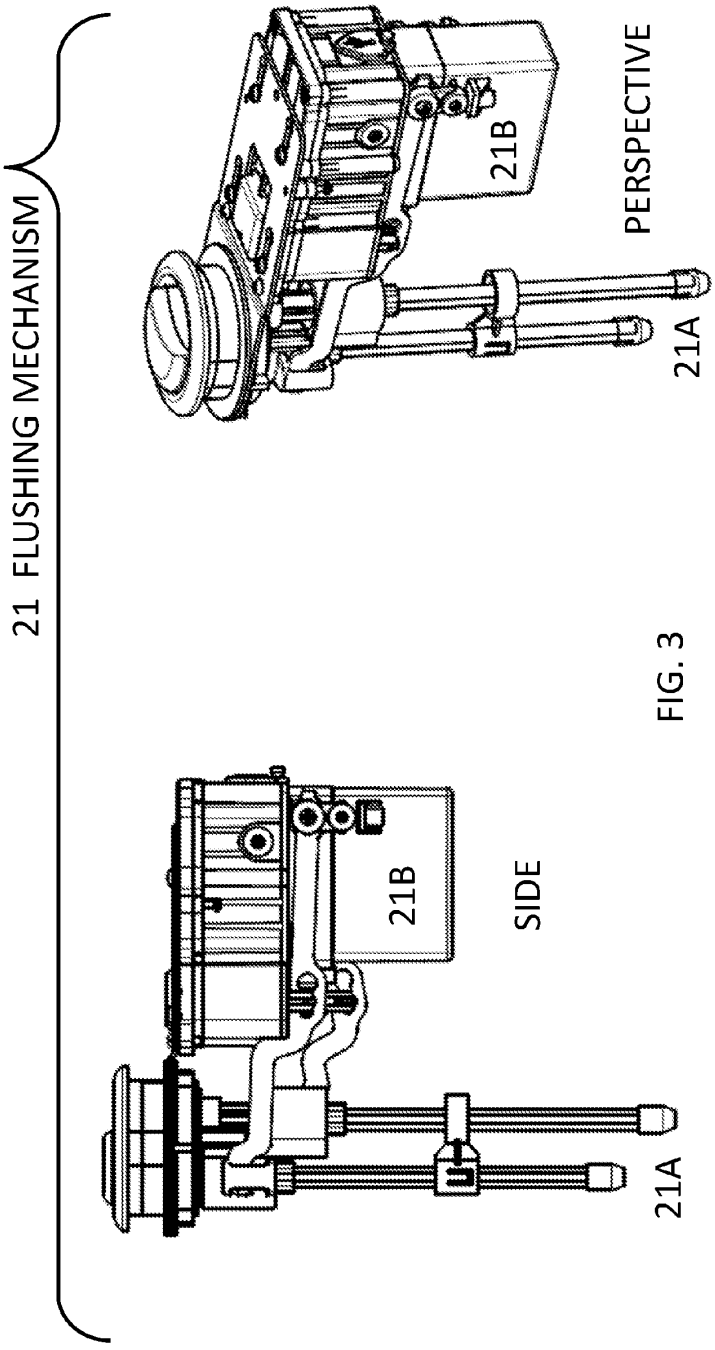

FIG. 3

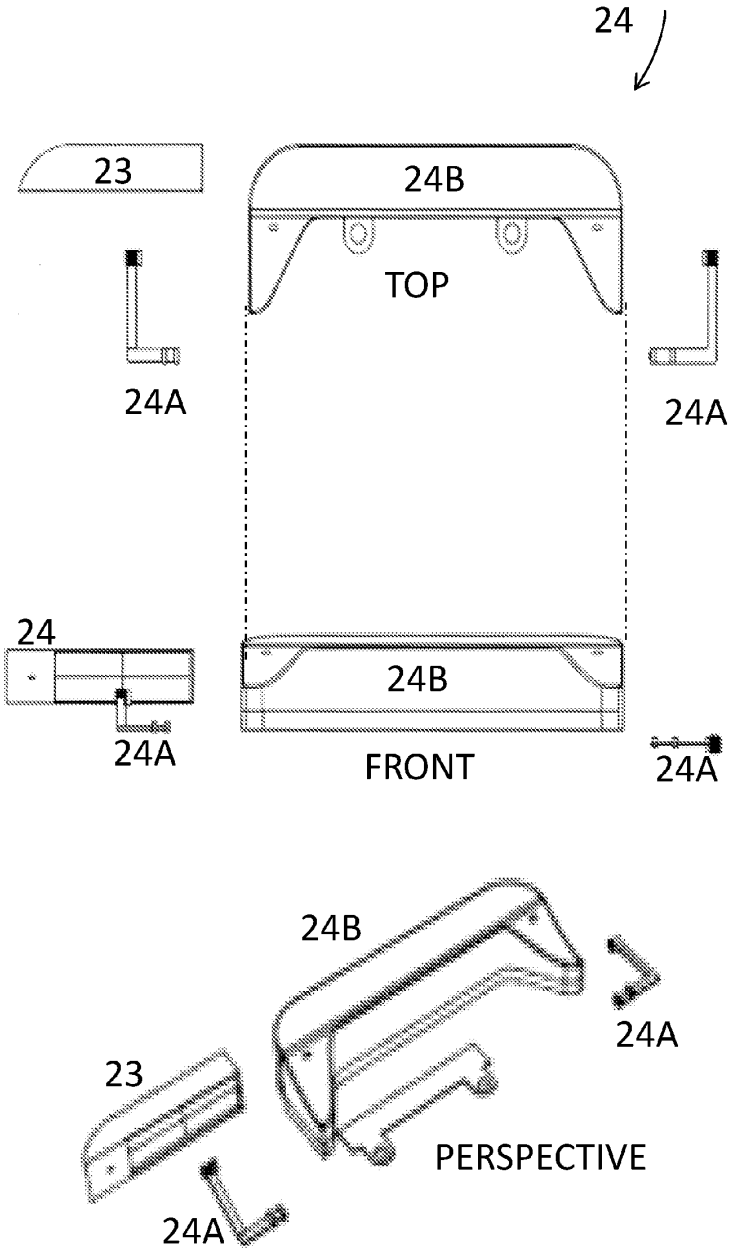
24
23
24B
TOP
24A
24A
24
24A
24B
FRONT
24A
24B
24A
23
PERSPECTIVE
24A

FIG. 4

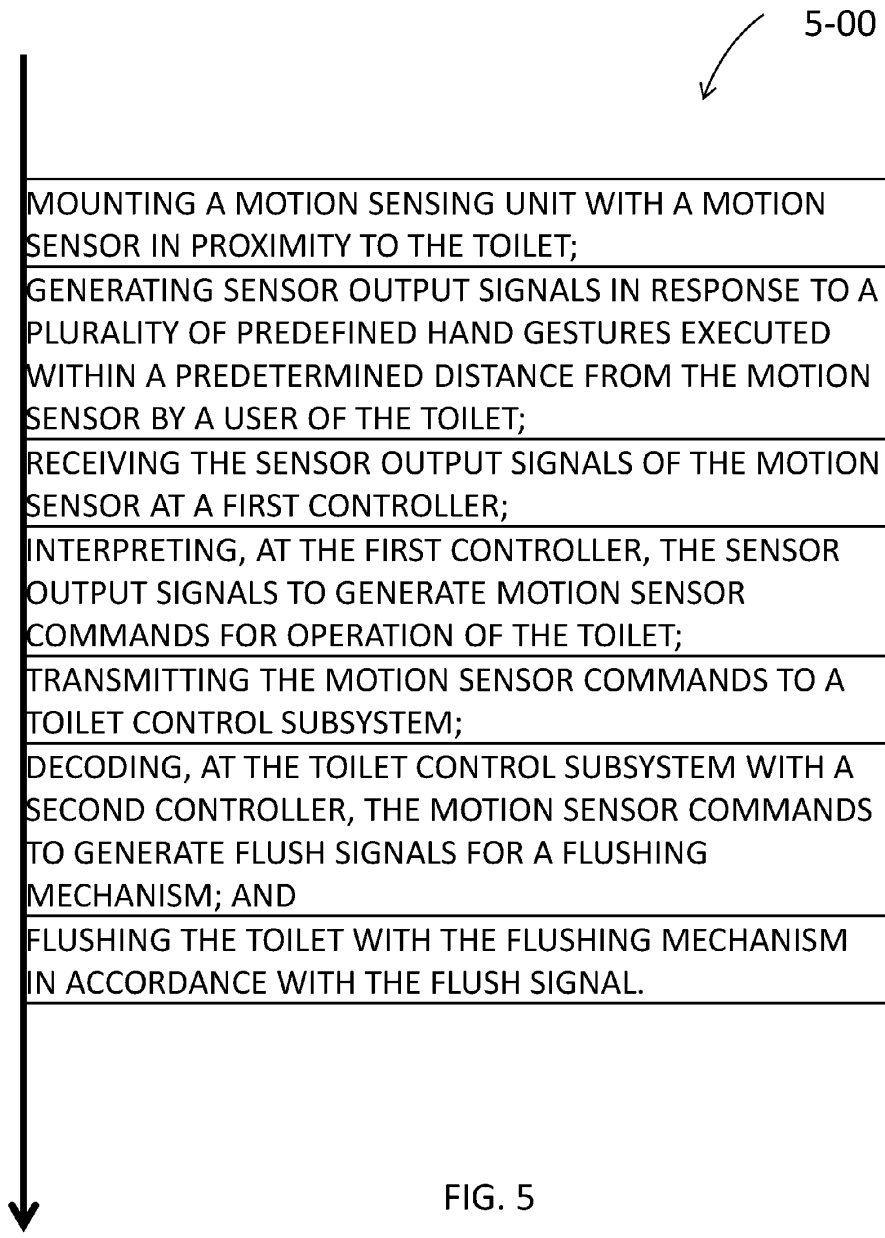
5-00
MOUNTING A MOTION SENSING UNIT WITH A MOTION SENSOR IN PROXIMITY TO THE TOILET;
5-01
GENERATING SENSOR OUTPUT SIGNALS IN RESPONSE TO A PLURALITY OF PREDEFINED HAND GESTURES EXECUTED WITHIN A PREDETERMINED DISTANCE FROM THE MOTION SENSOR BY A USER OF THE TOILET;
5-02
RECEIVING THE SENSOR OUTPUT SIGNALS OF THE MOTION SENSOR AT A FIRST CONTROLLER;
5-03
INTERPRETING, AT THE FIRST CONTROLLER, THE SENSOR OUTPUT SIGNALS TO GENERATE MOTION SENSOR COMMANDS FOR OPERATION OF THE TOILET;
5-04
TRANSMITTING THE MOTION SENSOR COMMANDS TO A TOILET CONTROL SUBSYSTEM;
5-05
DECODING, AT THE TOILET CONTROL SUBSYSTEM WITH A SECOND CONTROLLER, THE MOTION SENSOR COMMANDS TO GENERATE FLUSH SIGNALS FOR A FLUSHING MECHANISM; AND
5-06
FLUSHING THE TOILET WITH THE FLUSHING MECHANISM IN ACCORDANCE WITH THE FLUSH SIGNAL.
5-07

FIG. 5